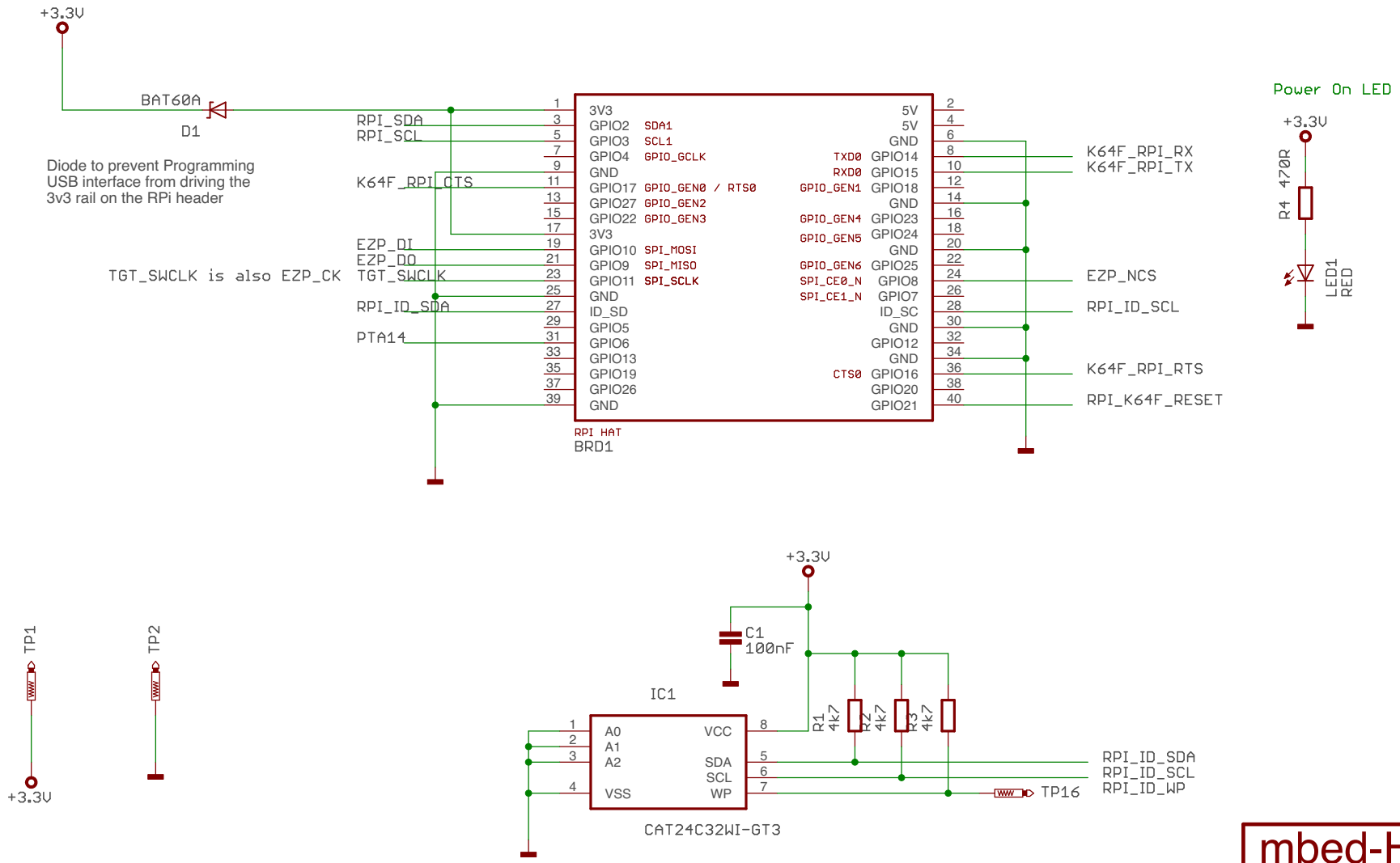

mbed-HDK

mbed 6LoWPAN Border Router HAT

26/08/2016 10:48

1/4

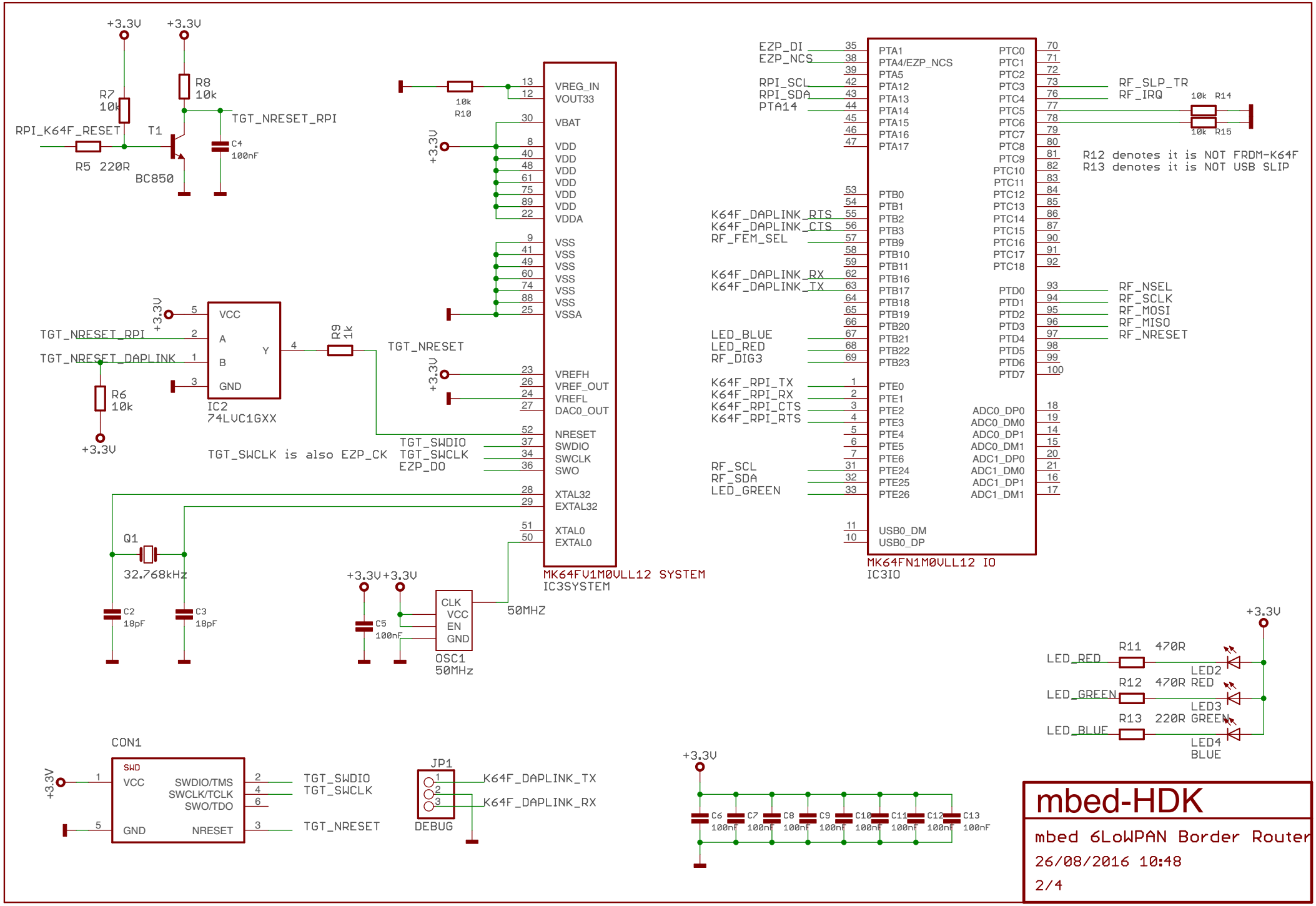
+3.3V
R7 10k
R8 10k
RPI_K64F_RESET
T1
TGT_NRESET_RPI
R5 220R
BC850
C4 100nF
10k R10
VREG_IN
VOUT33
VBAT
VDD
VDDA
VSS
VSSA
VREFH
VREF_OUT
VREFL
DAC0_OUT
NRESET
SWDIO
SWCLK
SWO
XTAL32
EXTAL32
XTAL0
EXTAL0
MK64FV1M0VLL12 SYSTEM
IC3SYSTEM
VCC
A
B
Y
GND
IC2
74LVC1GXX
TGT_NRESET_DAPLINK
R6 10k
R9 1k
TGT_NRESET
TGT_SWCLK is also EZP_CK
TGT_SWDIO
TGT_SWCLK
EZP_DO
Q1
32.768kHz
C2 18pF
C3 18pF
C5 100nF
CLK
VCC
EN
GND
OSC1
50MHz
50MHZ
EZP_DI
EZP_NCS
RPI_SCL
RPI_SDA
PTA14
K64F_DAPLINK_RTS
K64F_DAPLINK_CTS
RF_FEM_SEL
K64F_DAPLINK_RX
K64F_DAPLINK_TX
LED_BLUE
LED_RED
RF_DIG3
K64F_RPI_TX
K64F_RPI_RX
K64F_RPI_CTS
K64F_RPI_RTS
RF_SCL
RF_SDA
LED_GREEN
USB0_DM
USB0_DP
RF_SLP_TR
RF_IRQ
10k R14
10k R15
R12 denotes it is NOT FRDM-K64F
R13 denotes it is NOT USB SLIP
RF_NSEL
RF_SCLK
RF_MOSI
RF_MISO
RF_NRESET
MK64FN1M0VLL12 IO
IC3IO
LED_RED
R11 470R
LED2
LED_GREEN
R12 470R RED
LED3
LED_BLUE
R13 220R GREEN
LED4
BLUE
CON1
SWD
VCC
SWDIO/TMS
SWCLK/TCLK
SWO/TDO
GND
NRESET
TGT_SWDIO
TGT_SWCLK
TGT_NRESET
JP1
DEBUG
K64F_DAPLINK_TX
K64F_DAPLINK_RX
C6 100nF
C7 100nF
C8 100nF
C9 100nF
C10 100nF
C11 100nF
C12 100nF
C13 100nF
mbed-HDK
mbed 6LoWPAN Border Router HAT
26/08/2016 10:48
2/4

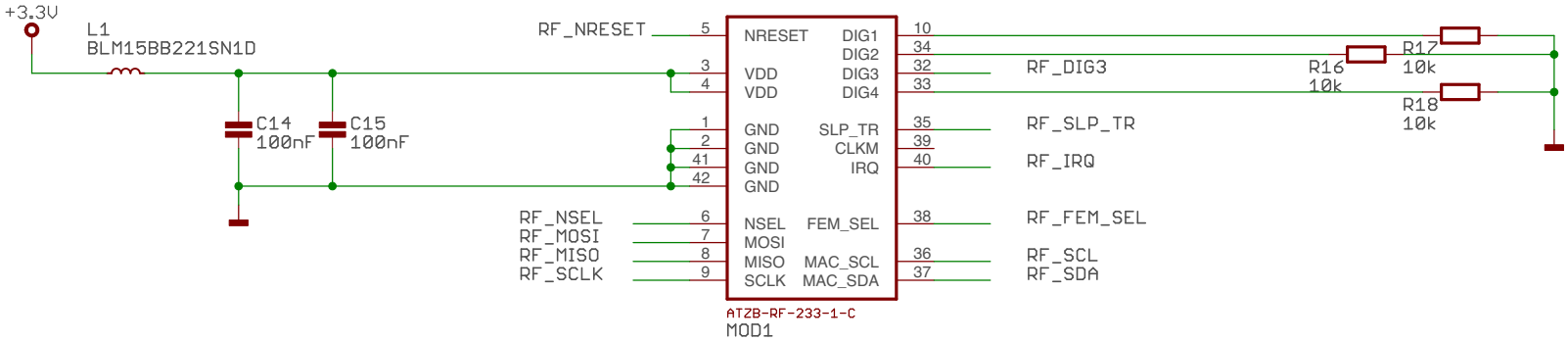

mbed-HDK

mbed 6LoWPAN Border Router HAT

26/08/2016 10:48

3/4

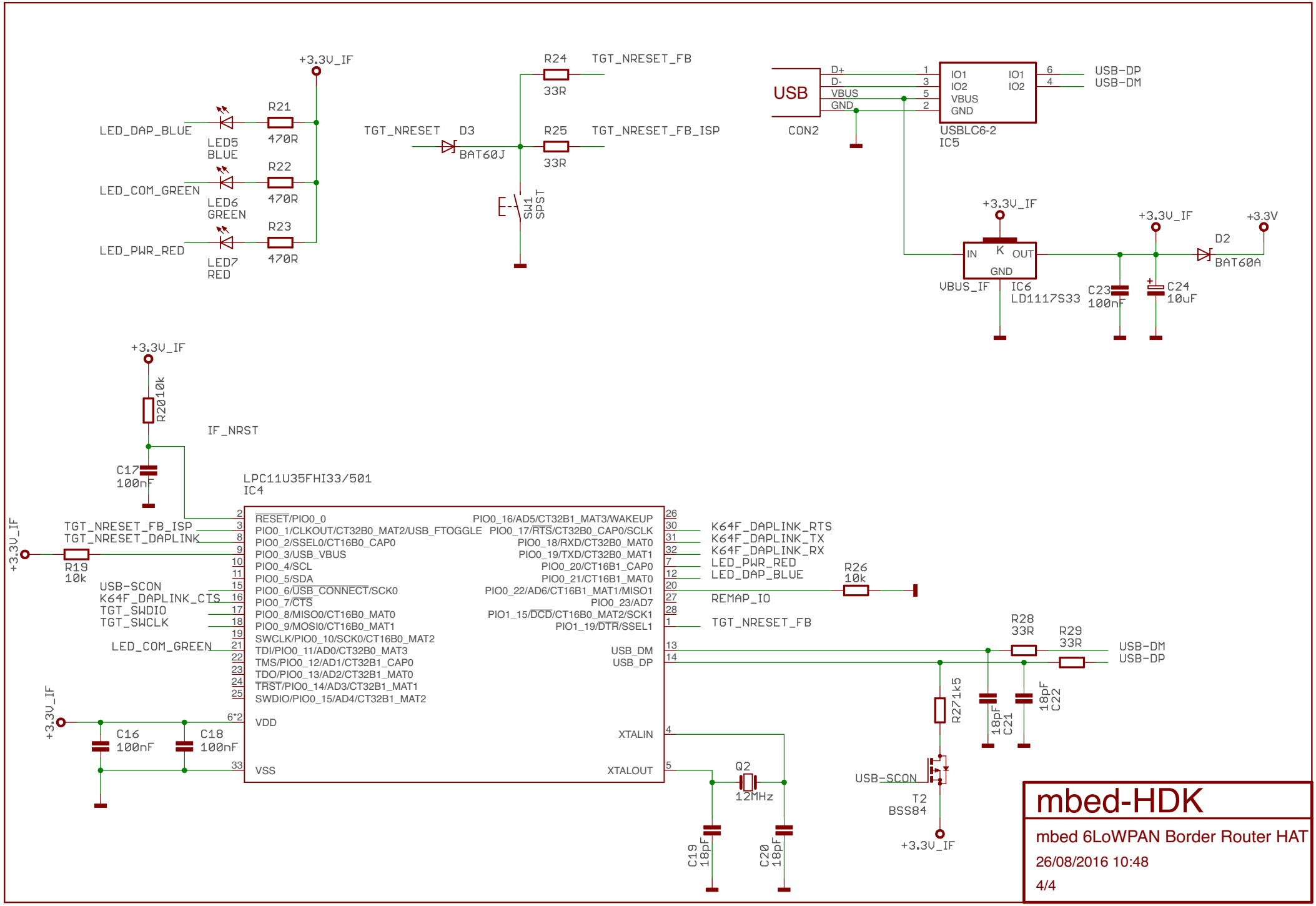
+3.3V_IF
R21
470R
LED_DAP_BLUE
LED5
BLUE
R22
470R
LED_COM_GREEN
LED6
GREEN
R23
470R
LED_PWR_RED
LED7
RED
R24
33R
TGT_NRESET_FB
TGT_NRESET
D3
BAT60J
R25
33R
TGT_NRESET_FB_ISP
SW1
SPST
USB
CON2
D+
D-
VBUS
GND
IO1
IO2
VBUS
GND
IO1
IO2
USB-DP
USB-DM
USBLC6-2
IC5
+3.3V_IF
IN
K
OUT
GND
VBUS_IF
IC6
LD1117S33
C23
100nF
C24
10uF
+3.3V_IF
D2
BAT60A
+3.3V
R20
10k
IF_NRST
C17
100nF
LPC11U35FHI33/501
IC4
+3.3V_IF
R19
10k
TGT_NRESET_FB_ISP
TGT_NRESET_DAPLINK
USB-SCON
K64F_DAPLINK_CTS
TGT_SWDIO
TGT_SWCLK
LED_COM_GREEN
RESET/PIO0_0
PIO0_1/CLKOUT/CT32B0_MAT2/USB_FTOGGLE
PIO0_2/SSEL0/CT16B0_CAP0
PIO0_3/USB_VBUS
PIO0_4/SCL
PIO0_5/SDA
PIO0_6/USB_CONNECT/SCK0
PIO0_7/CTS
PIO0_8/MISO0/CT16B0_MAT0
PIO0_9/MOSI0/CT16B0_MAT1
SWCLK/PIO0_10/SCK0/CT16B0_MAT2
TDI/PIO0_11/AD0/CT32B0_MAT3
TMS/PIO0_12/AD1/CT32B1_CAP0
TDO/PIO0_13/AD2/CT32B1_MAT0
TRST/PIO0_14/AD3/CT32B1_MAT1
SWDIO/PIO0_15/AD4/CT32B1_MAT2
VDD
VSS
PIO0_16/AD5/CT32B1_MAT3/WAKEUP
PIO0_17/RTS/CT32B0_CAP0/SCLK
PIO0_18/RXD/CT32B0_MAT0
PIO0_19/TXD/CT32B0_MAT1
PIO0_20/CT16B1_CAP0
PIO0_21/CT16B1_MAT0
PIO0_22/AD6/CT16B1_MAT1/MISO1
PIO0_23/AD7
PIO1_15/DCD/CT16B0_MAT2/SCK1
PIO1_19/DTR/SSEL1
USB_DM
USB_DP
XTALIN
XTALOUT
K64F_DAPLINK_RTS
K64F_DAPLINK_TX
K64F_DAPLINK_RX
LED_PWR_RED
LED_DAP_BLUE
REMAP_IO
TGT_NRESET_FB
R26
10k
R28
33R
R29
33R
USB-DM
USB-DP
R271k5
18pF
C21
18pF
C22
+3.3V_IF
C16
100nF
C18
100nF
Q2
12MHz
C19
18pF
C20
18pF
USB-SCON
T2
BSS84
+3.3V_IF
mbed-HDK
mbed 6LoWPAN Border Router HAT
26/08/2016 10:48
4/4