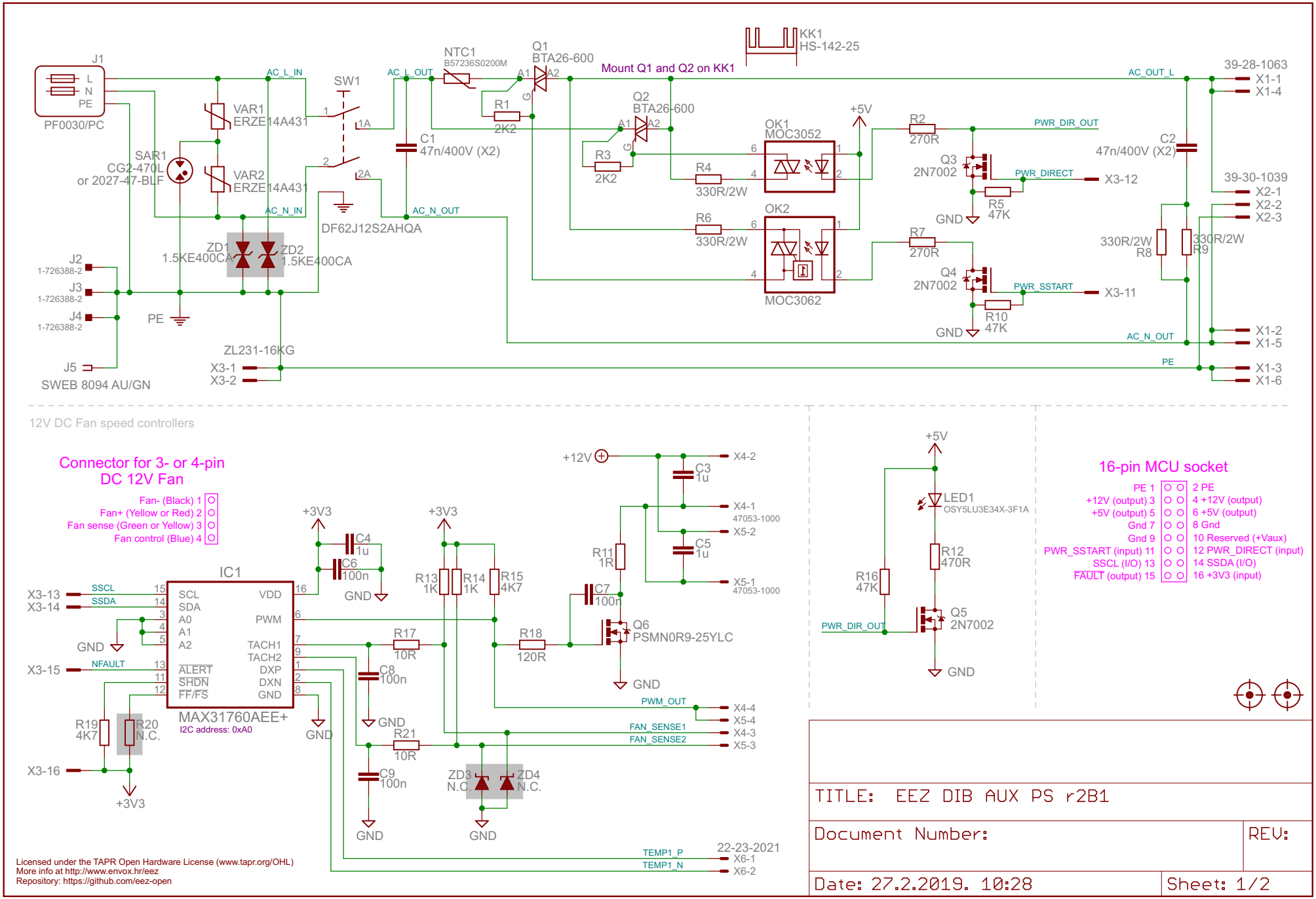
J1
L
N
PE
PF0030/PC
AC_L_IN
AC_N_IN
VAR1
ERZE14A431
VAR2
ERZE14A431
SAR1
CG2-470L
or 2027-47-BLF
SW1
1A
2A
DF62J12S2AHQA
ZD1
1.5KE400CA
ZD2
1.5KE400CA
J2
1-726388-2
J3
1-726388-2
J4
1-726388-2
J5
SWEB 8094 AU/GN
PE
ZL231-16KG
X3-1
X3-2
AC_L_OUT
AC_N_OUT
C1
47n/400V (X2)
NTC1
B57236S0200M
R1
2K2
Q1
BTA26-600
Q2
BTA26-600
R3
2K2
Mount Q1 and Q2 on KK1
KK1
HS-142-25
R4
330R/2W
R6
330R/2W
OK1
MOC3052
OK2
MOC3062
+5V
R2
270R
R7
270R
Q3
2N7002
Q4
2N7002
R5
47K
R10
47K
GND
PWR_DIR_OUT
PWR_DIRECT
PWR_SSTART
X3-12
X3-11
AC_OUT_L
AC_N_OUT
PE
C2
47n/400V (X2)
330R/2W
R8
330R/2W
R9
39-28-1063
X1-1
X1-4
39-30-1039
X2-1
X2-2
X2-3
X1-2
X1-5
X1-3
X1-6
12V DC Fan speed controllers
Connector for 3- or 4-pin
DC 12V Fan
Fan- (Black) 1
Fan+ (Yellow or Red) 2
Fan sense (Green or Yellow) 3
Fan control (Blue) 4
IC1
MAX31760AEE+
I2C address: 0xA0
SCL
SDA
A0
A1
A2
ALERT
SHDN
FF/FS
VDD
PWM
TACH1
TACH2
DXP
DXN
GND
X3-13
X3-14
X3-15
X3-16
SSCL
SSDA
NFAULT
R19
4K7
R20
N.C.
+3V3
C4
1u
C6
100n
R13
1K
R14
1K
R15
4K7
R17
10R
R18
120R
C8
100n
R21
10R
C9
100n
ZD3
N.C.
ZD4
N.C.
+12V
C3
1u
C5
1u
R11
1R
C7
100n
Q6
PSMN0R9-25YLC
X4-2
X4-1
47053-1000
X5-2
X5-1
47053-1000
PWM_OUT
FAN_SENSE1
FAN_SENSE2
X4-4
X5-4
X4-3
X5-3
TEMP1_P
TEMP1_N
22-23-2021
X6-1
X6-2
+5V
LED1
OSY5LU3E34X-3F1A
R12
470R
R16
47K
Q5
2N7002
PWR_DIR_OUT
16-pin MCU socket
PE 1
+12V (output) 3
+5V (output) 5
Gnd 7
Gnd 9
PWR_SSTART (input) 11
SSCL (I/O) 13
FAULT (output) 15
2 PE
4 +12V (output)
6 +5V (output)
8 Gnd
10 Reserved (+Vaux)
12 PWR_DIRECT (input)
14 SSDA (I/O)
16 +3V3 (input)
Licensed under the TAPR Open Hardware License (www.tapr.org/OHL)
More info at http://www.envox.hr/eez
Repository: https://github.com/eez-open
TITLE: EEZ DIB AUX PS r2B1
Document Number:
REV:
Date: 27.2.2019. 10:28
Sheet: 1/2

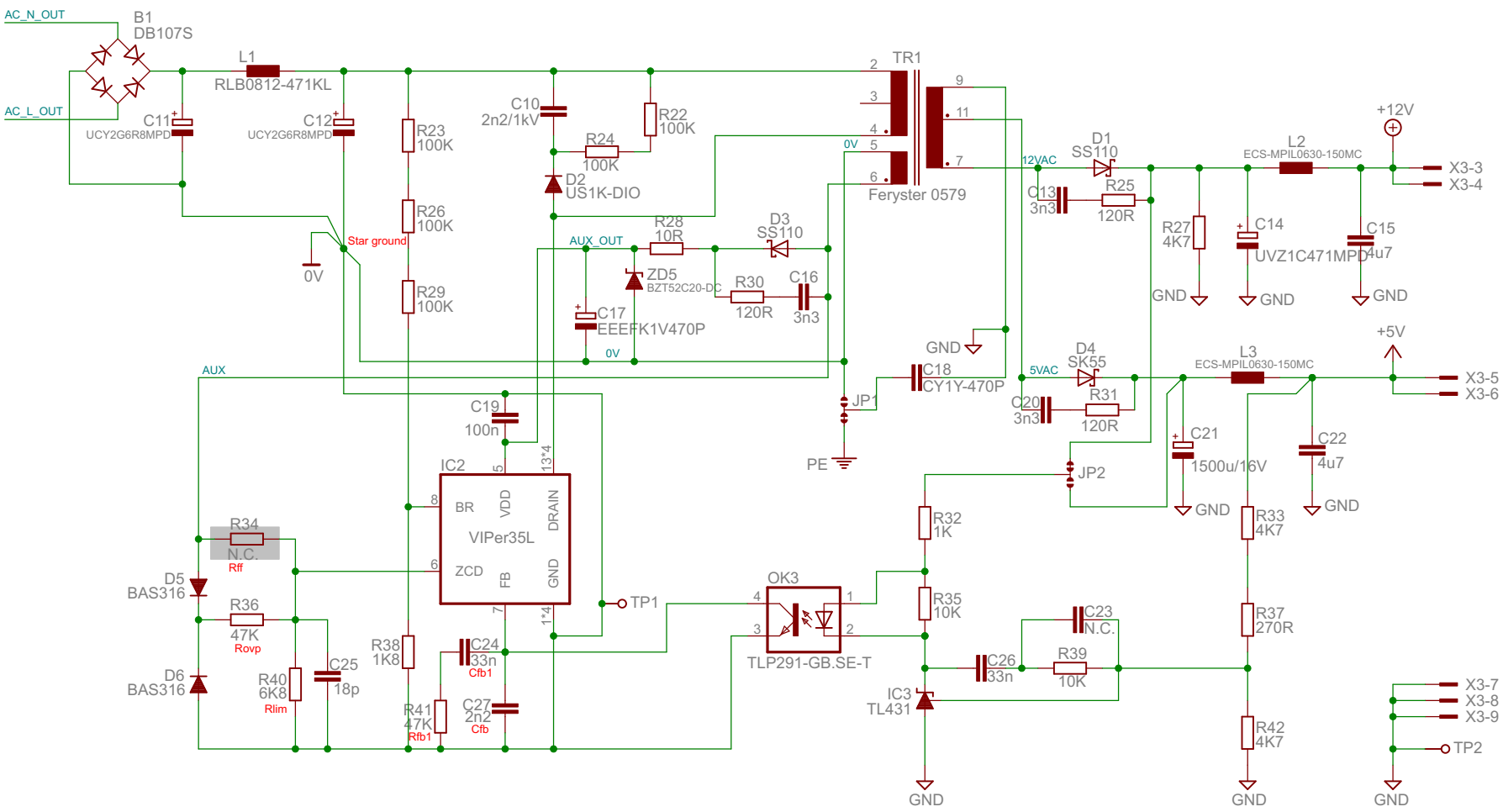

AC input, QR flyback bias power supply

TITLE: EEZ DIB AUX PS r2B1

Document Number:

REV:

Date: 27.2.2019. 10:28

Sheet: 2/2

Licensed under the TAPR Open Hardware License (www.tapr.org/OHL)
More info at https://www.envox.hr/eez
Repository: https://github.com/eez-open