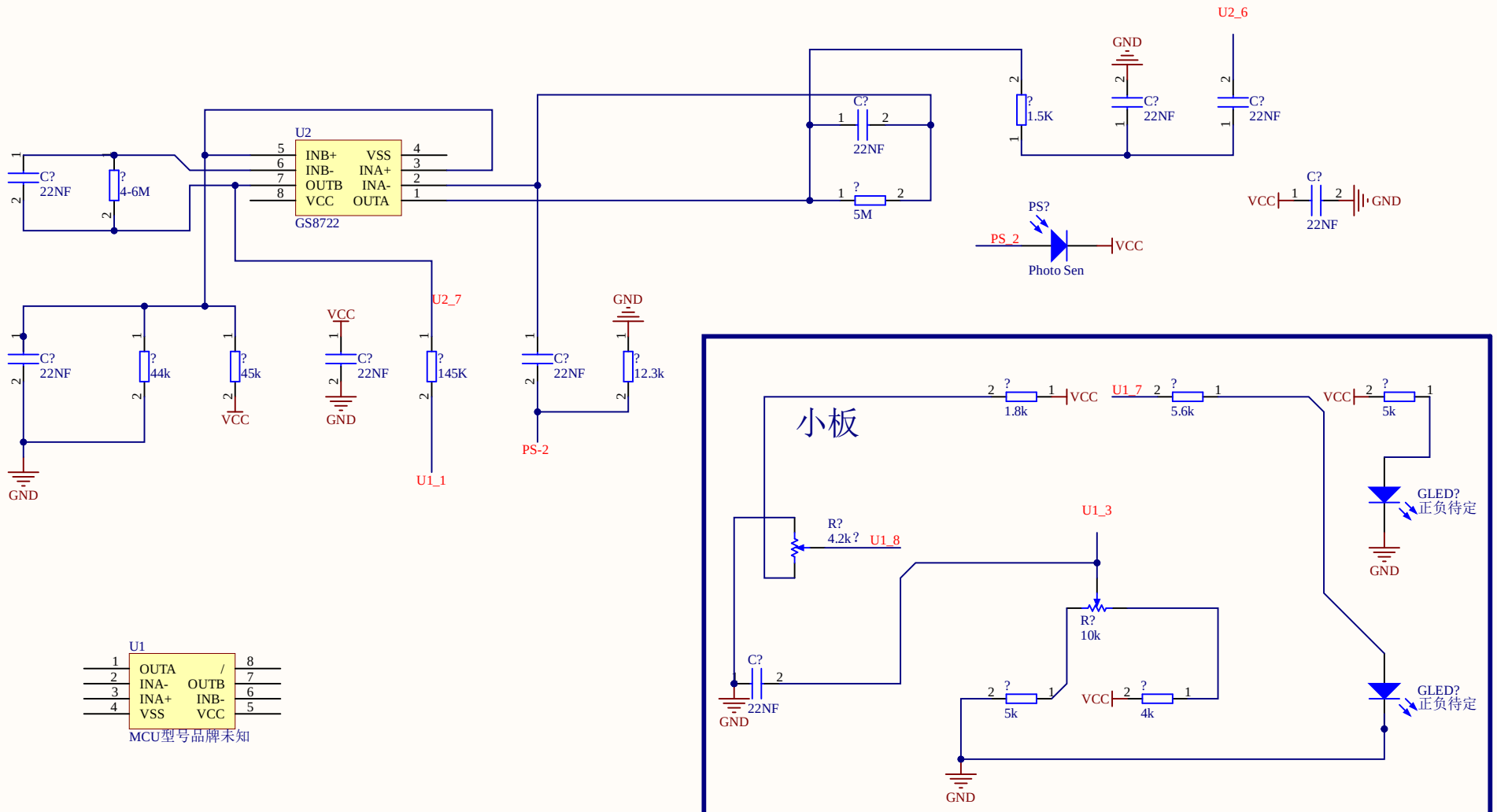

Title		
Size A4	Number	Revision
Date: 6/10/2026		Sheet of
File: C:\Users\..\华怡丰ES201-D300N 2022版开关原理图-20260610.SchDoc		Drawn by:

Comment	Description	Designator	Footprint	LibRef	Quantity