HOT-PLATE CONTROLLER

Group 12

Market Analysis

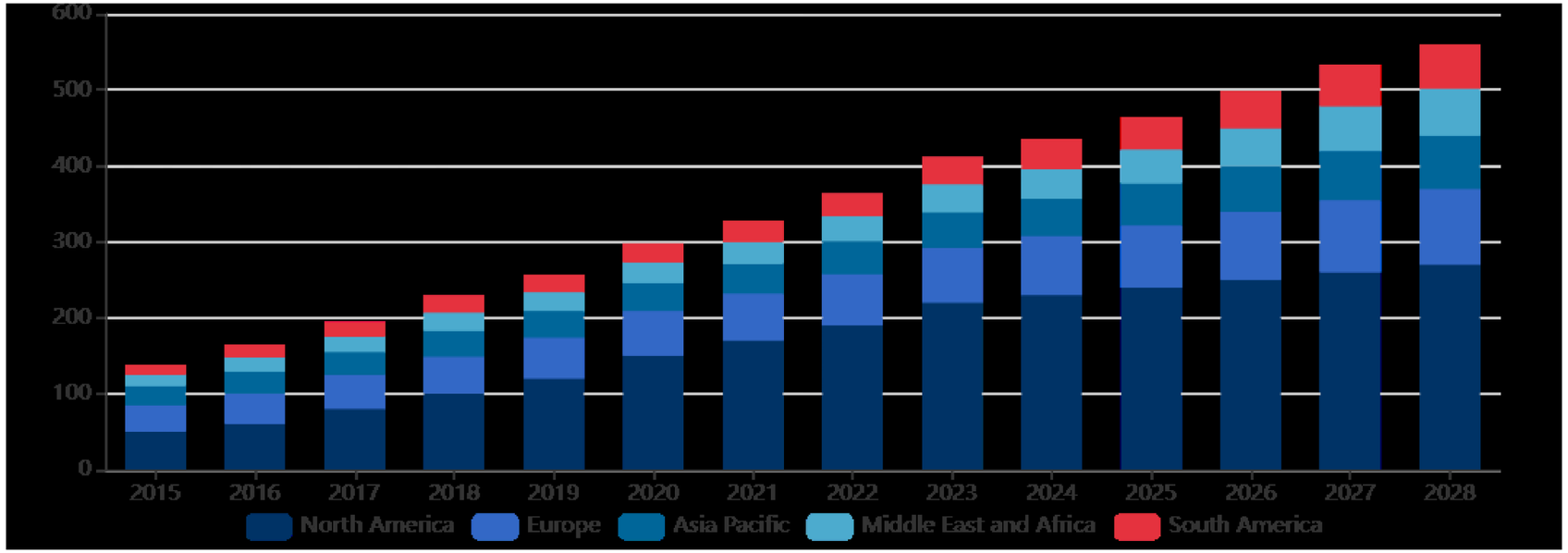

- Hot-plate controllers has become a novel method of cooking and it is a growing market.
- Hot plates are used in the chemical industry, electronic industry, laboratories and house hold activities.
- Most Hotplates use Bimetallic Strips as both temperature sensors and the actuators, which is a discrete controller and is not very accurate.

Key Specifications

- Accurate temperature control from (50C to 250C)
- Ouput power of 2kW.
- PID Controller mechanism.
- 230VAC input voltage.

Block Diagram

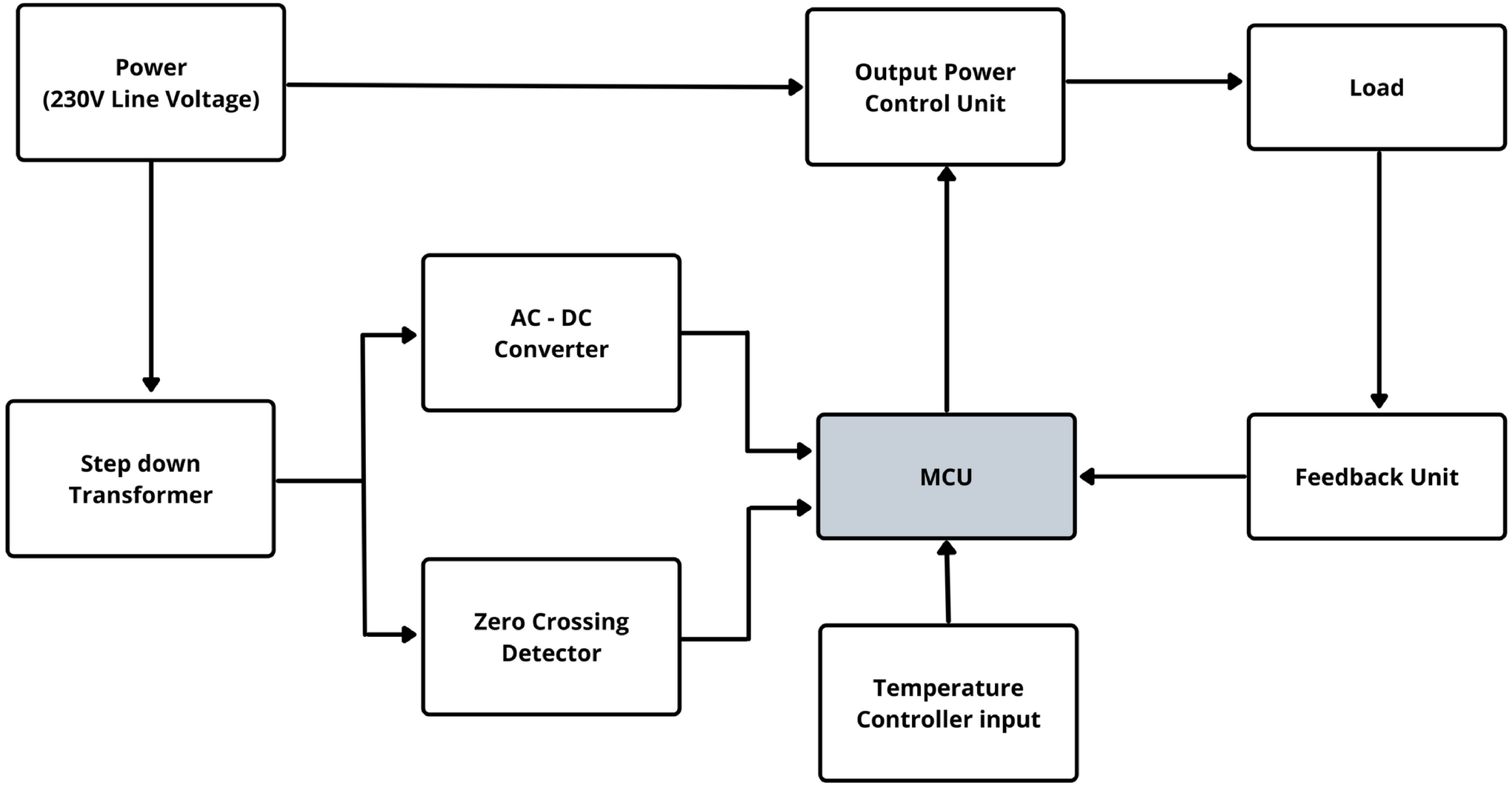

Circuit Diagram

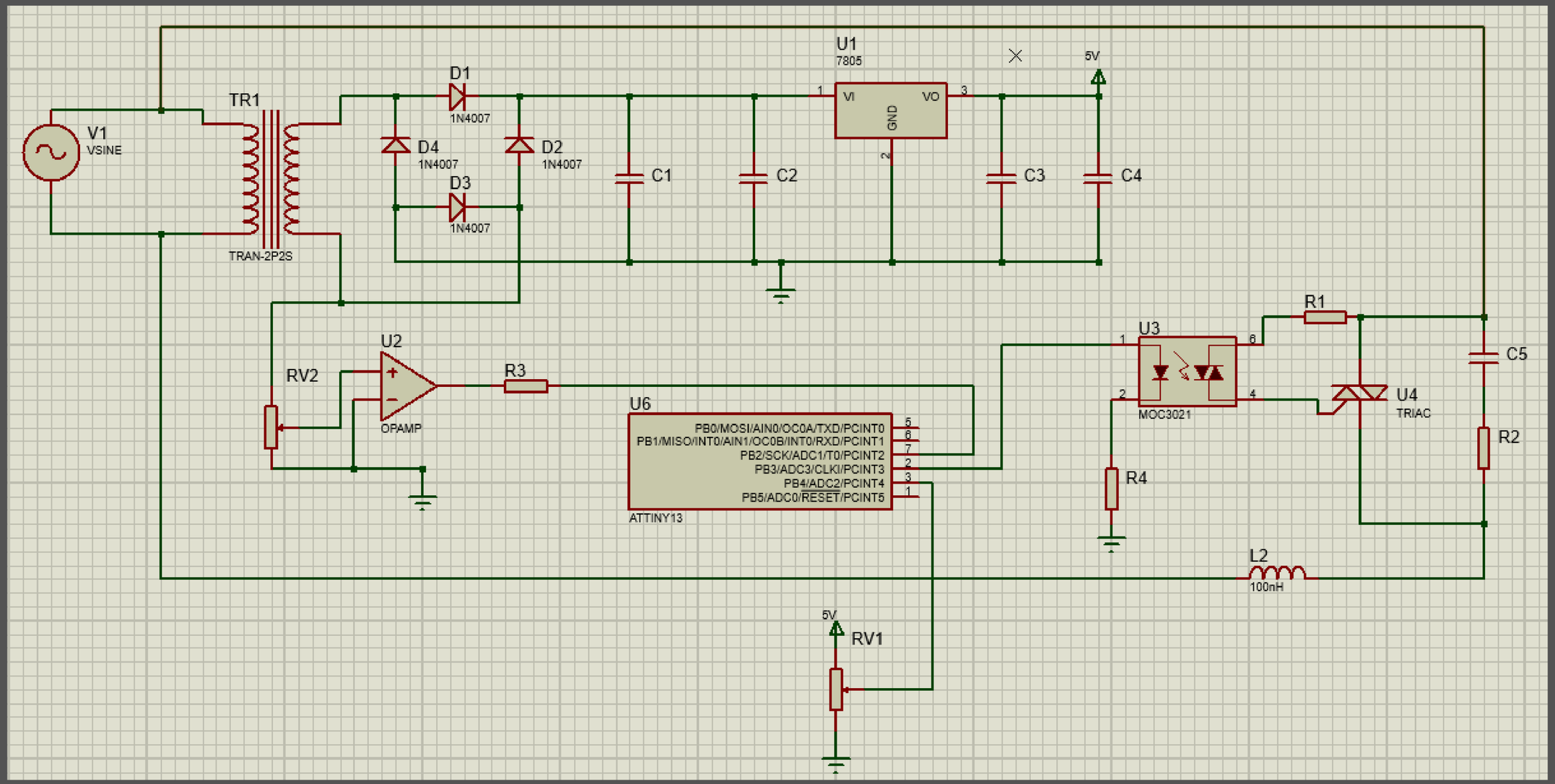

Power Supply

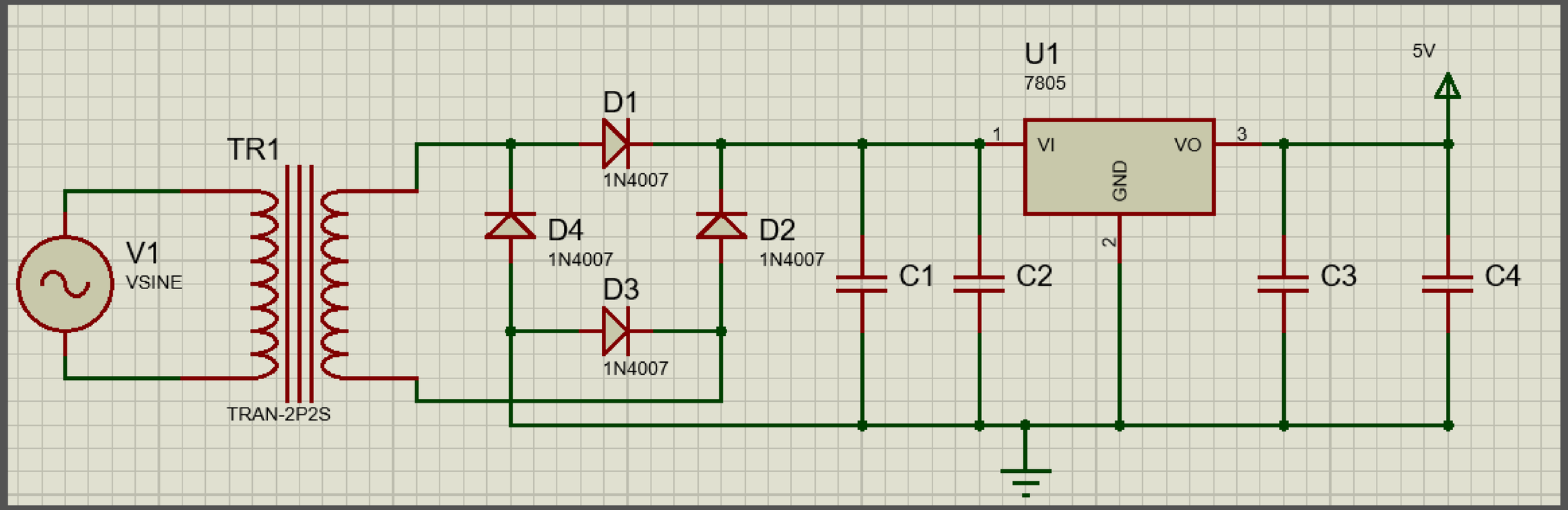

6V 300mA single tap transformer and a 7805 voltage regulator is used to make a 5V single-source power supply.

Zero Crossing Detector

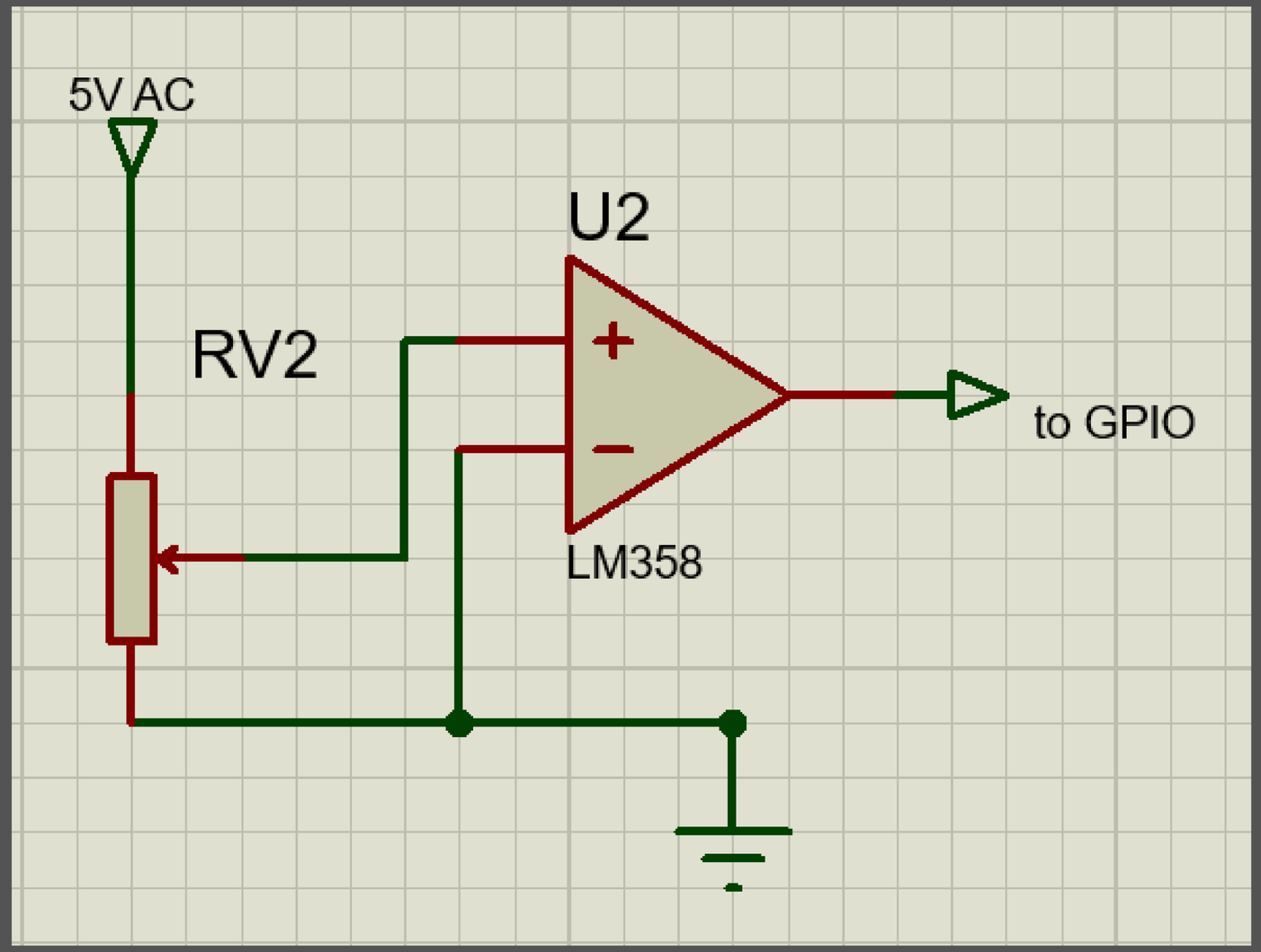

LM358 Opamp is used

Temperature Sensor

PT100

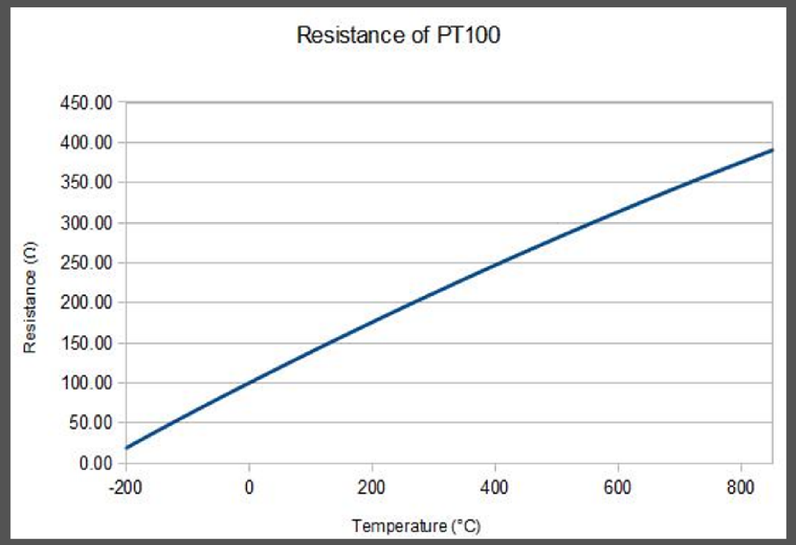

- High Linearity
- Stability
- Good accuracy
- Temperature sensing range of around -50C to 300C.

Temperature Sensor - Constant Current Source

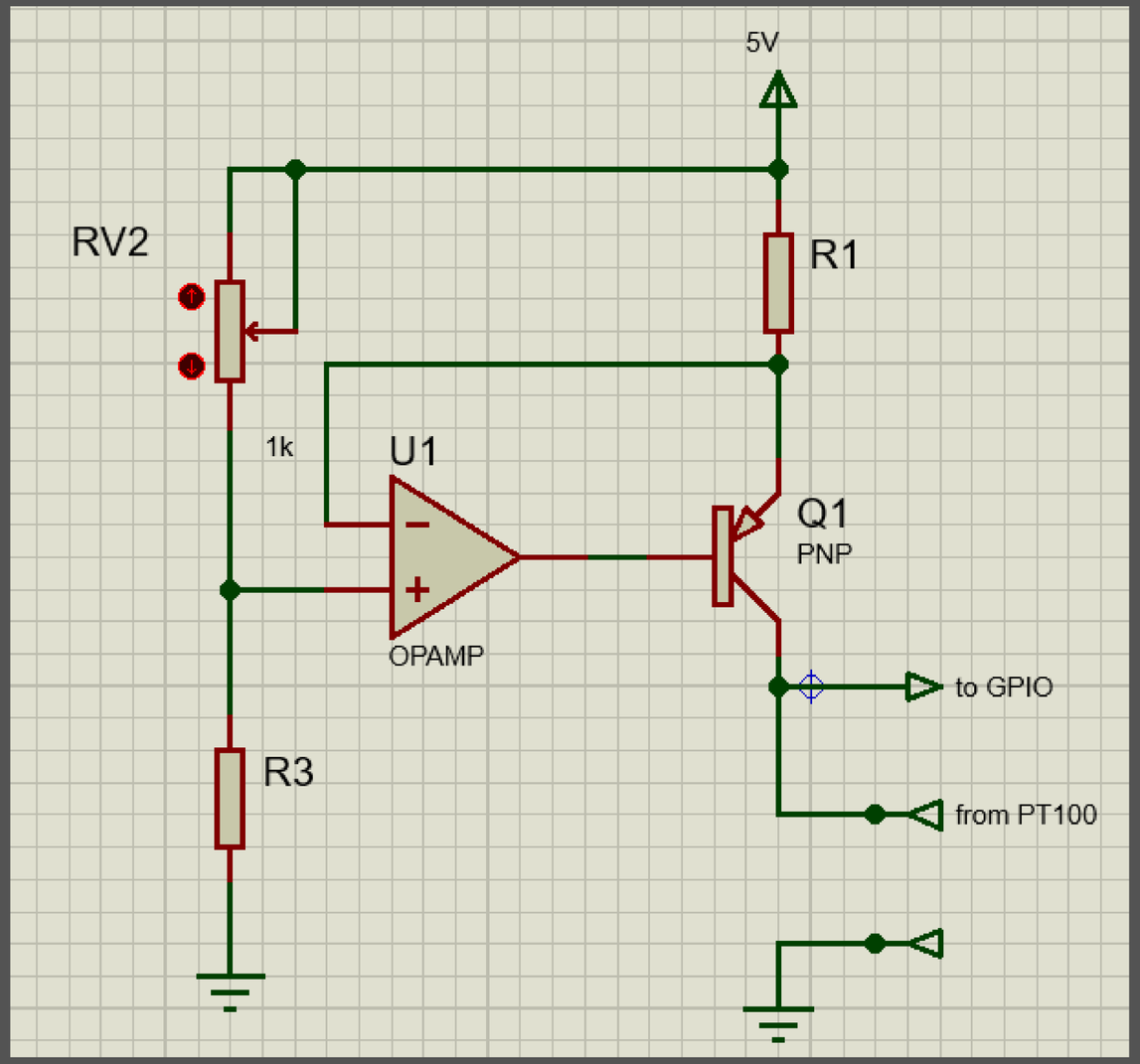

- PT100 needs a constant current source as a supply in order to operate accurately.
- LM358 opamp & A733 BJT is used

MCU

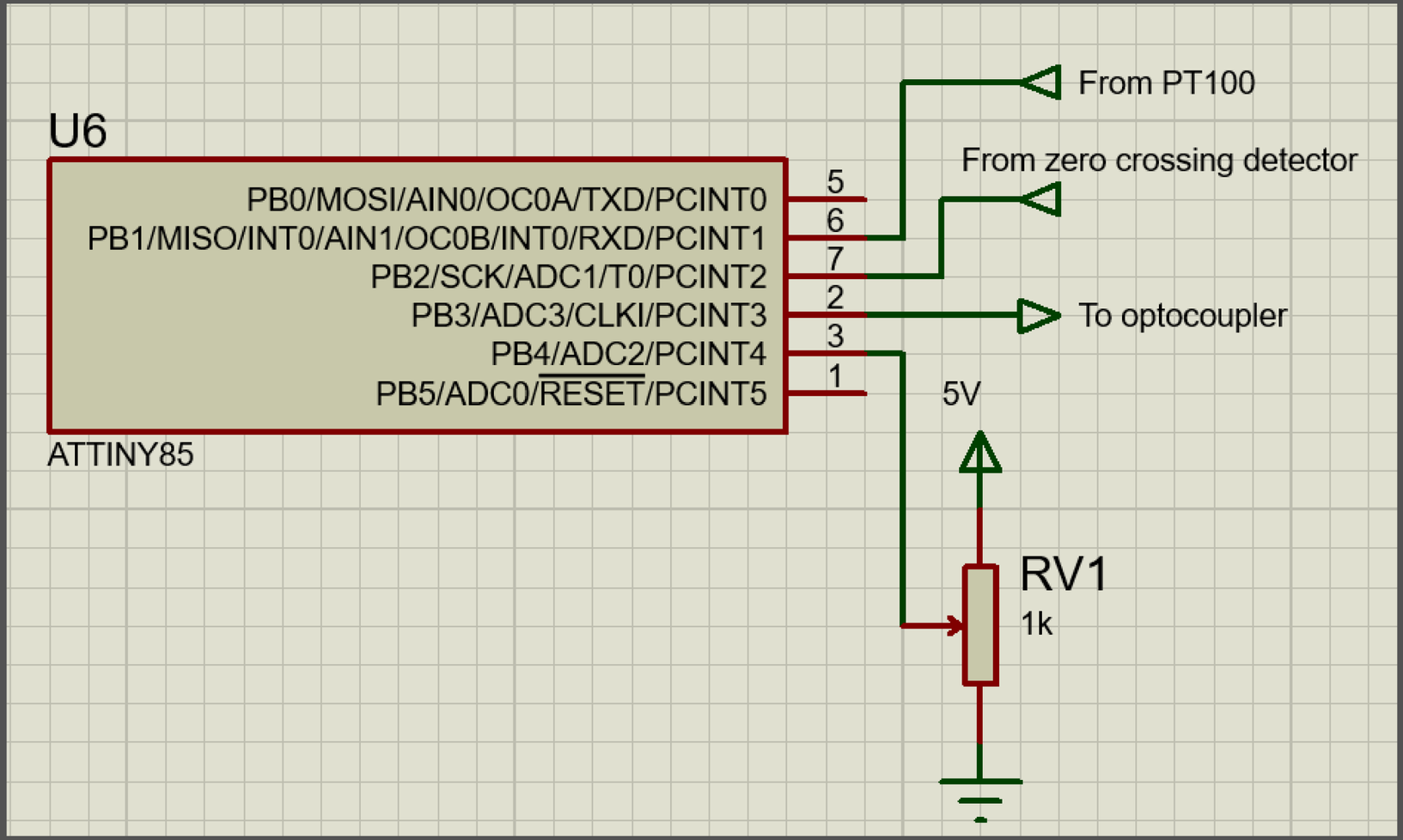

ATtiny85A AVR Micro-contorller is used

Ouput Controller

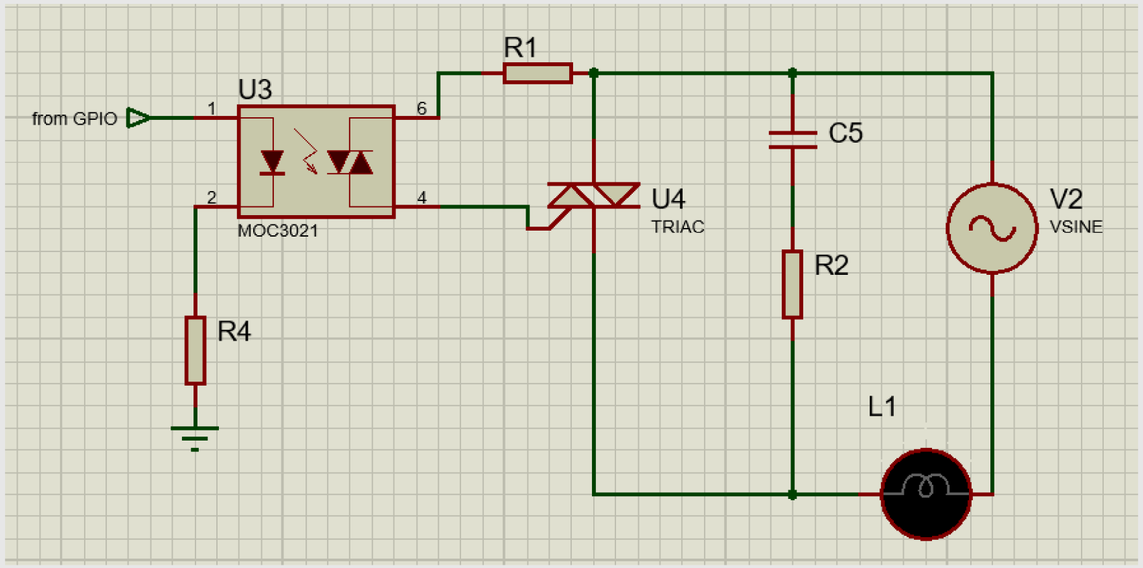

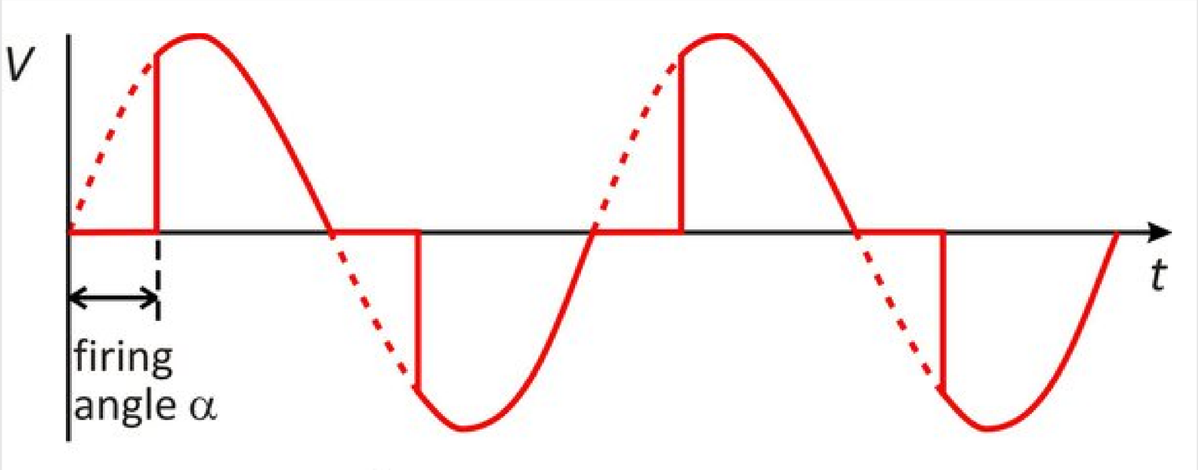

- BT139 Triac
- MOC3021 Optocoupler

Symbol	Parameter	Conditions	Max	Unit
V_{DRM}	repetitive peak off-state voltage		600	V
I_{TSM}	non-repetitive peak on-state current	full sine wave; $T_{j(init)}$ = 25 °C; t_p = 20 ms;	155	A
$I_{T(RMS)}$	RMS on-state current	full sine wave; T_{mb} ≤ 99 °C;	16	A

Heating Element

Roll over image to zoom in

Airex 2000W Hot Plate Element Sealed Electric Cooking Heater Cooktop (7 Inch)

Visit the Airex Store

4.4 ★★★★☆ 64 ratings

-35% ₹916.00

M.R.P.: ~~₹1,399.00~~

Inclusive of all taxes

Save Extra with 3 offers

Bank Offer (4): 10% Instant Discount upto Rs.1500 with Citibank Credit Cards and Debit Cards(Non-EMI... | See All

No Cost EMI: Avail No Cost EMI on select cards for orders above ₹3000 | Details

THANK YOU!

Abeysinghe A.L.R.	190012X
Abeysinghe W.A.M.S.Y.	190014F
Abeywickrama K.C.S.	190018V
Adikari A.M.A.D.	190021A