بسم الله الرحمن الرحيم
MostHdWallpapers.com

GROUP #7
GROUP MEMBERS:

MAHNOOR	19010819-053
KINZA IQBAL	19010819-045
MOMINA	18260819-060
HAJRA MAHMOOD	19010819-055
LARAIB MUSTAFA	19010819-041

Section: msc.cs(A)
Course: Data communication and network(DCN)
Course instructor:
Mr. Bilal Janjooa

TOPIC IS:

DIGITAL TO ANALOG CONVERSION

TABLE OF CONTENTS:

i. SIGNAL

- DIGITAL SIGNAL
- ANALOG SIGNAL

DIGITAL TO ANALOG CONVERSION

ANALOG TO DIGITAL CONVERSION

2. BIT RATE AND BAUD RATE

- DEFINATION
- IMPORTANCE

3. AMPLITUDE SHIFT KEYING.

i. FSK(FREQUENCY SHIFT KEYING)

ii. PSK(PHASE SHIFT KEYING)

4. QAM(QUADRATURE AMPLITUDE MODULATION)

- TYPES OF QAM
- ADVANTANGE/DISADVANTAGE

WHAT IS SIGNAL?

A SIGNAL IS A GESTURE, ACTION, OR SOUND THAT IS USED TO ESTABLISH COMMUNICATION BETWEEN THE SENDER AND RECEIVER.

SIGNALS ARE CLASSIFIED INTO VARIOUS TYPES BASED ON THEIR CHARACTERISTICS. HOWEVER, THEY ARE MAINLY CLASSIFIED INTO TWO TYPES: ANALOG SIGNALS AND DIGITAL SIGNALS

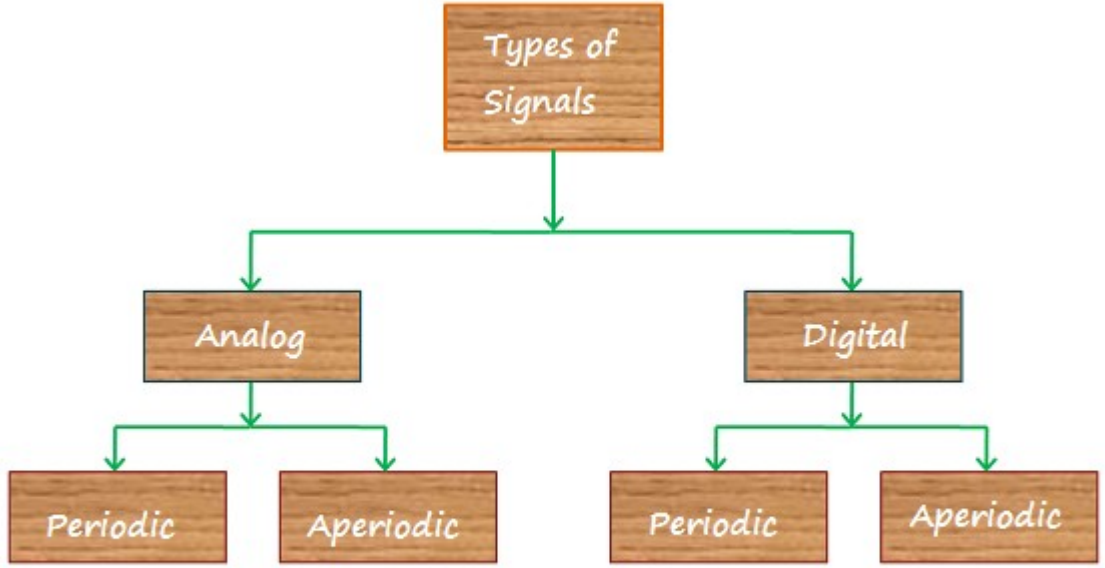

Types of Signals

WHAT IS DIGITAL SIGNAL?

A **DIGITAL SIGNAL** IS A **SIGNAL** THAT IS BEING USED TO REPRESENT DATA AS A SEQUENCE OF DISCRETE VALUES; AT ANY GIVEN TIME IT CAN ONLY TAKE ON ONE OF A FINITE NUMBER OF VALUES.

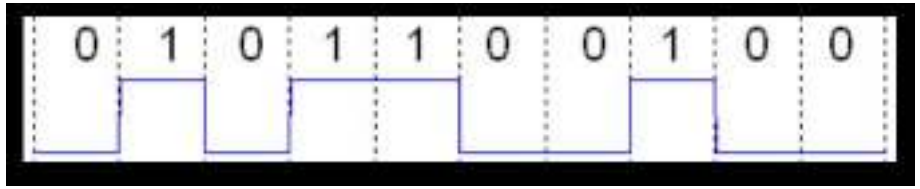

HOW DIGITAL SIGNAL PRODUCED?

Light Sensor used to produce an Digital Signal

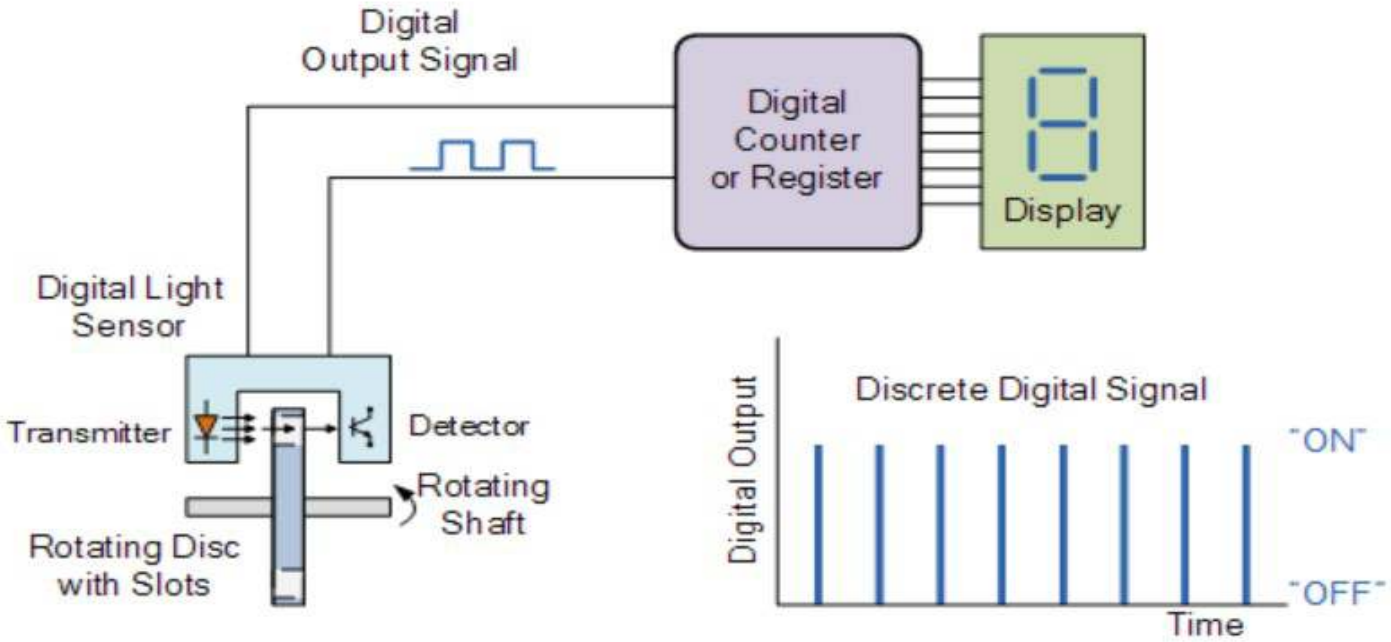

WHAT IS ANALOG SIGNAL?

Analog signal

Analog signal is a continuous signal whose characteristics (amplitude, voltage or frequency) changes continuously over a period of time. For example, in an analog audio signal, the voltage of the signal varies continuously with the pressure of the sound waves. Some examples of analog signals are light signals, electrical signals, human speech signals, and mechanical signals. In an electrical signal, the current, voltage or frequency of the signal may be varied to represent the information.

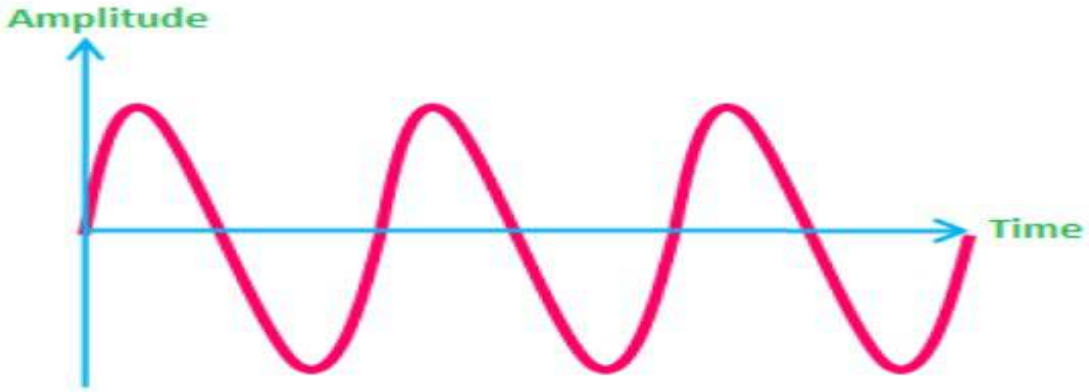

Analog Signal

PERIODIC SIGNAL:

AN ANALOG OR DIGITAL SIGNAL WHICH REPEATS ITSELF AFTER A SPECIFIC INTERVAL OF TIME IS CALLED PERIODIC SIGNAL.

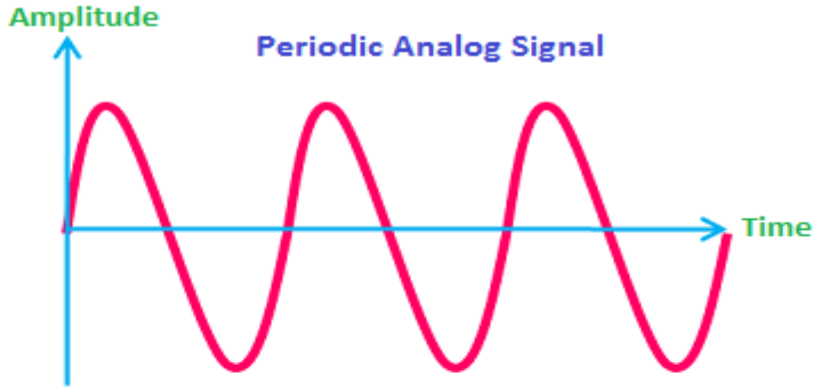

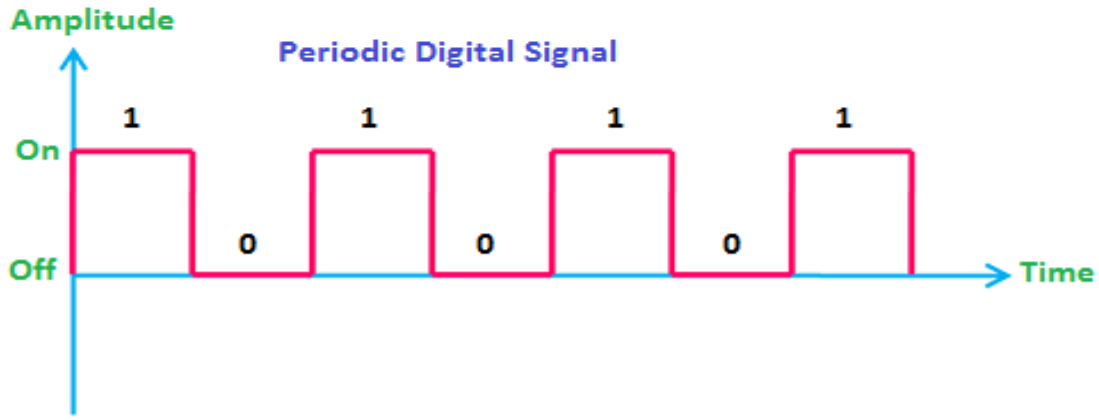

Eg

APERIODIC SIGNAL:

AN ANALOG OR DIGITAL SIGNAL WHICH DOES NOT REPEATS ITSELF AFTER A SPECIFIC INTERVAL OF TIME IS CALLED APERIODIC SIGNAL. THEY ARE RANDOM SIGNALS.

EG: SOUND SIGNALS FROM RADIO, ALL TYPES OF NOISE SIGNALS.

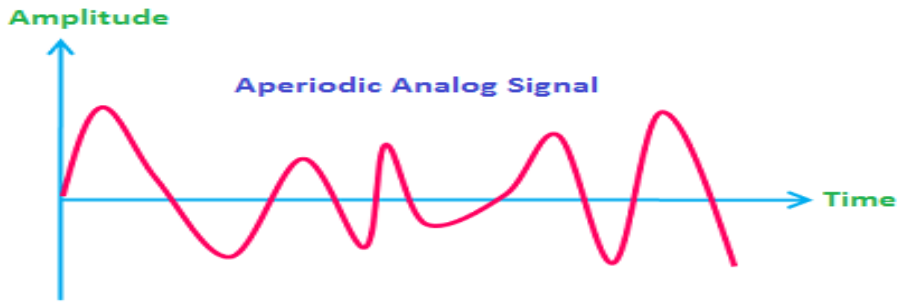

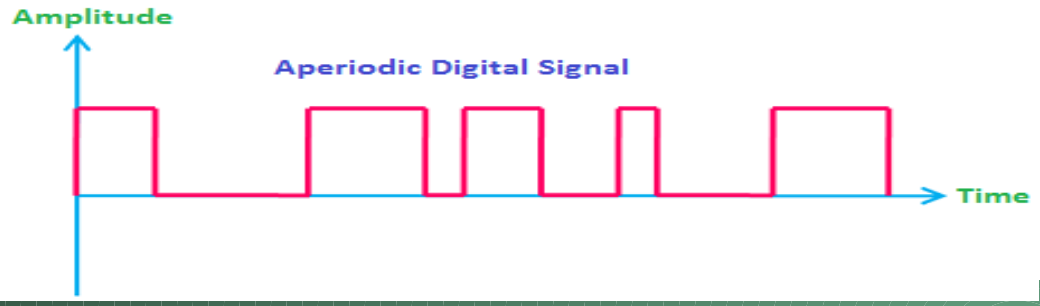

DIGITIAL TO ANALOG CONVERSION:

DIGITAL-TO-ANALOG CONVERSION (DAC) IS A PROCESS IN WHICH **DIGITAL** SIGNALS HAVING A FEW (USUALLY TWO) DEFINED LEVELS OR STATES ARE **CONVERTED** INTO **ANALOG** SIGNALS HAVING A VERY LARGE NUMBER OF STATES. BOTH THE **DAC** AND THE **ADC** ARE OF SIGNIFICANCE IN MANY APPLICATIONS OF **DIGITAL** SIGNAL PROCESSING.

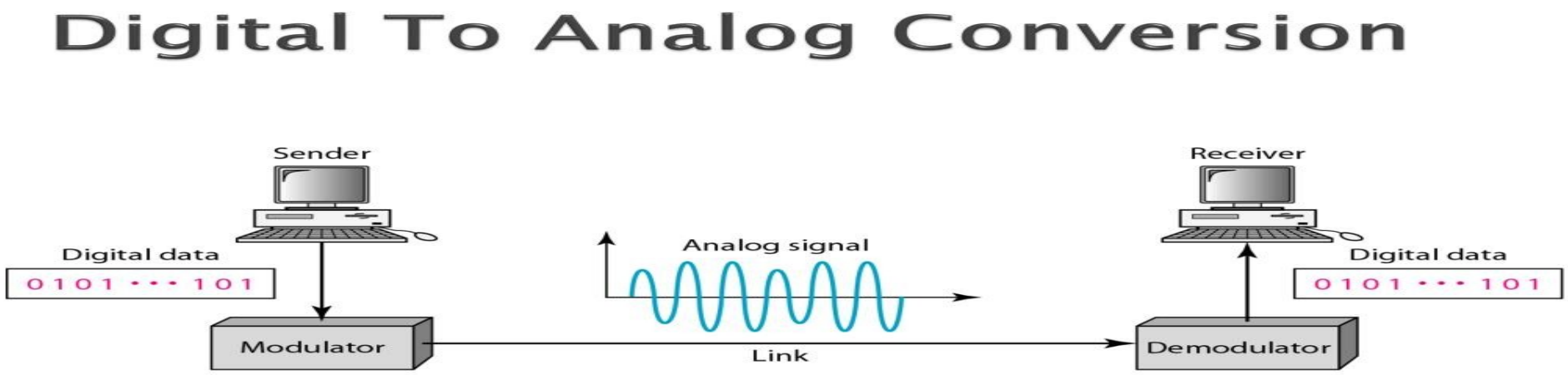

ANALOG TO DIGITAL SIGNAL:

IN ELECTRONICS, AN ANALOG-TO-DIGITAL CONVERTER IS A SYSTEM THAT CONVERTS AN ANALOG SIGNAL, SUCH AS A SOUND PICKED UP BY A MICROPHONE OR LIGHT ENTERING A DIGITAL CAMERA, INTO A DIGITAL SIGNAL

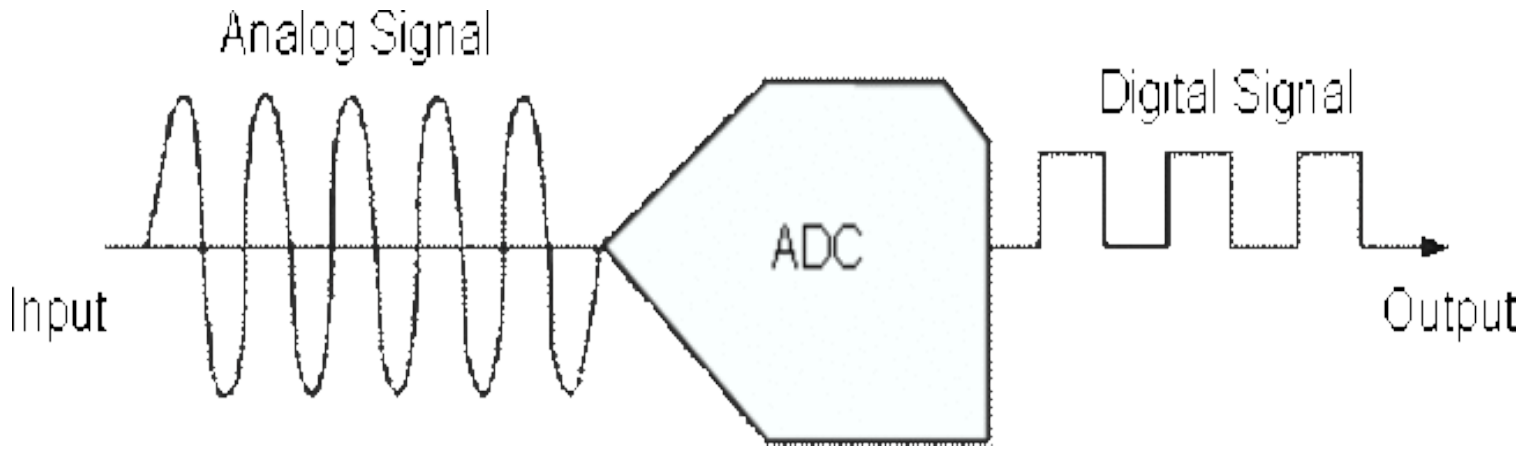

DIGITAL-TO-ANALOG CONVERTERS (DACS) AND ANALOG-TO-DIGITAL CONVERTERS (ADC) ARE IMPORTANT BUILDING BLOCKS WHICH INTERFACE SENSORS (E.G. TEMPERATURE, PRESSURE, LIGHT, SOUND, CRUISING SPEED OF A CAR) TO DIGITAL SYSTEMS SUCH AS MICROCONTROLLERS OR PCS. AN ADC TAKES AN ANALOG SIGNAL AND CONVERTS IT INTO A BINARY ONE, WHILE A DAC CONVERTS A BINARY SIGNAL INTO AN ANALOG VALUE.

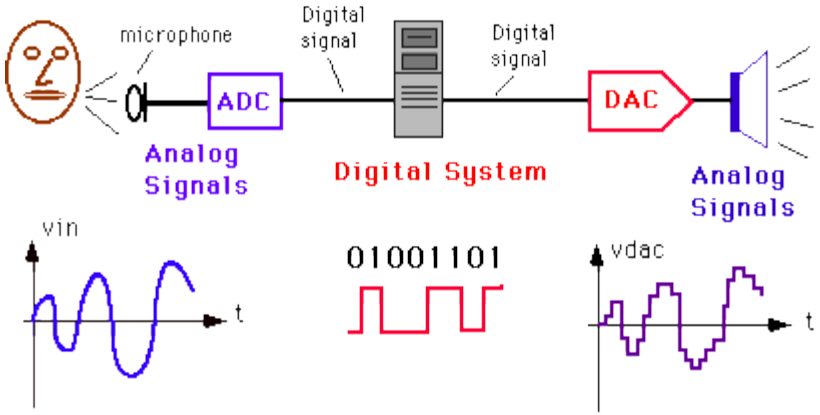

Sensor signals vary continuously ("analog") between a specified voltage range. As an example, the output of a microphone gives a voltage between 0 (no speech) to 100mV (for loud speech). Any value between these two extremes are possible. The "analog" signal needs to be converted into a "digital" word of n-bits in order to be read into and processed by a computer (or digital signal processor - DSP). The "analog" and "digital" signals

COMPARISON CHART:

ANALOG SIGNAL

	Analog
Signal	Analog signal is a continuous signal which represents physical measurements.
Waves	Denoted by sine waves
Representation	Uses continuous range of values to represent information
Example	Human voice in air, analog electronic devices.

DIGITAL SIGNAL

- DIGITAL SIGNALS ARE DISCRETE TIME SIGNALS GENERATED BY DIGITAL MODULATION.
- DENOTED BY SQUARE WAVES
- USES DISCRETE OR DISCONTINUOUS VALUES TO REPRESENT INFORMATION
- COMPUTERS, CDS, DVDS, AND OTHER DIGITAL ELECTRONIC DEVICES.

ANALOG TO DIGITAL:
DIGITAL TO ANALOG:

THERE IS FURTHER DIVIDE PARTS AS FOLLOWS:

- ***BITS AND BAUD RATES***
- ***AMPLITUDE AND SHIFT KEYING(ASK)***
- ***FREQUENCY SHIFT KEYING(FSK)***
- ***PHASE SHIFT KEYING(PSK)***
- ***QUADRATURE AMPLITUDE MODULATION(QAM)***

BIT AND BAUD RATE

1. Definition of Bit and Baud rate
2. Difference between Bit and Baud rate
3. Digital to analog conversion techniques

Definition of Bit Rate

Bit rate can be defined as the number of **bit intervals** per second. And **bit interval** is referred to as the time needed to transfer one single bit. In simpler words, the bit rate is the number of bits sent in one second, usually expressed in bits per second (bps). For example, kilobits per second (Kbps), Megabits per second (Mbps), Gigabits per second (Gbps), etc.

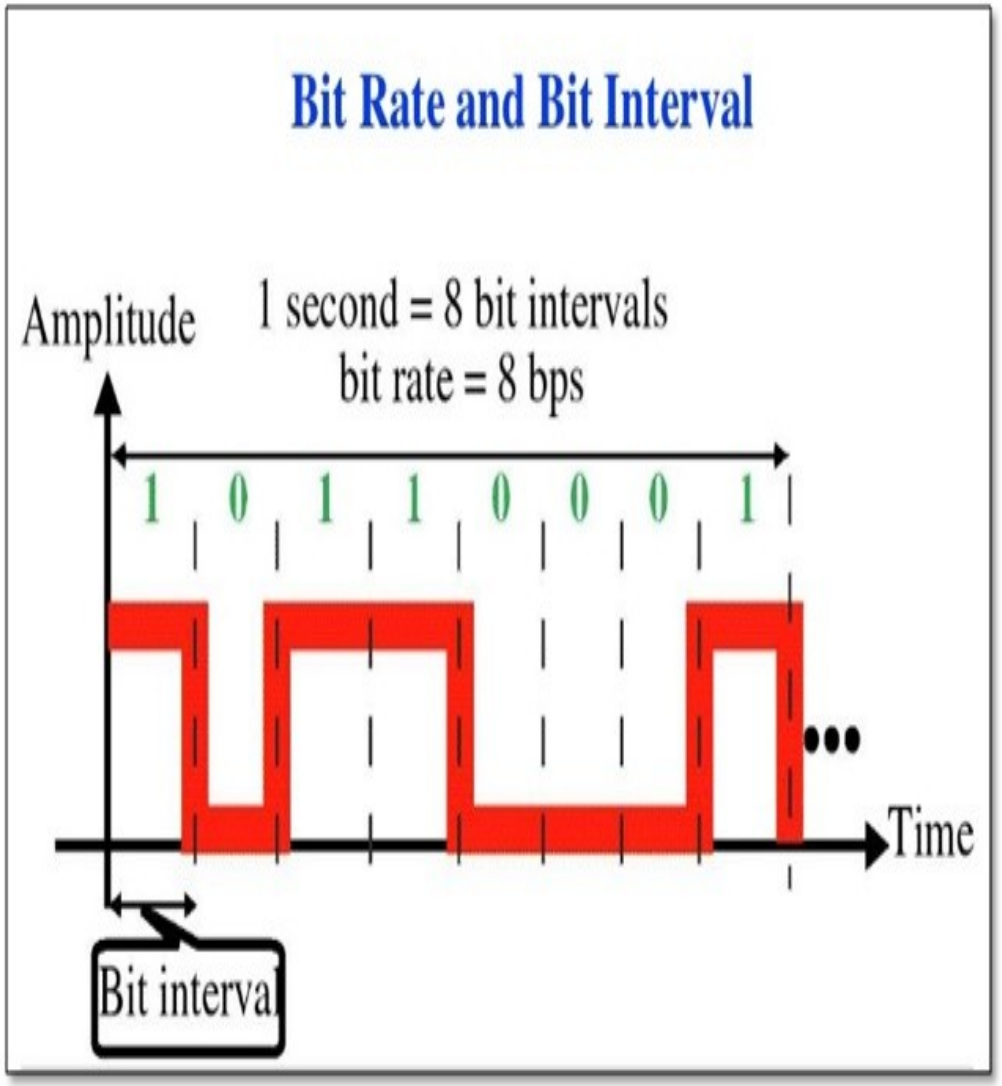

Definition of Baud Rate

Baud rate is expressed in the number of times a **signal** can **change** on transmission line per second. Usually, the transmission line uses only two signal states, and make the baud rate equal to the number of bits per second that can be transferred.

An example can illustrate it. For example, 1500 baud rate illustrates that the channel state can alter up to 1500 times per second. The meaning of changing state means that channel can change its state from 0 to 1 or from 1 to 0 up to 1500 times per second (in the given case).

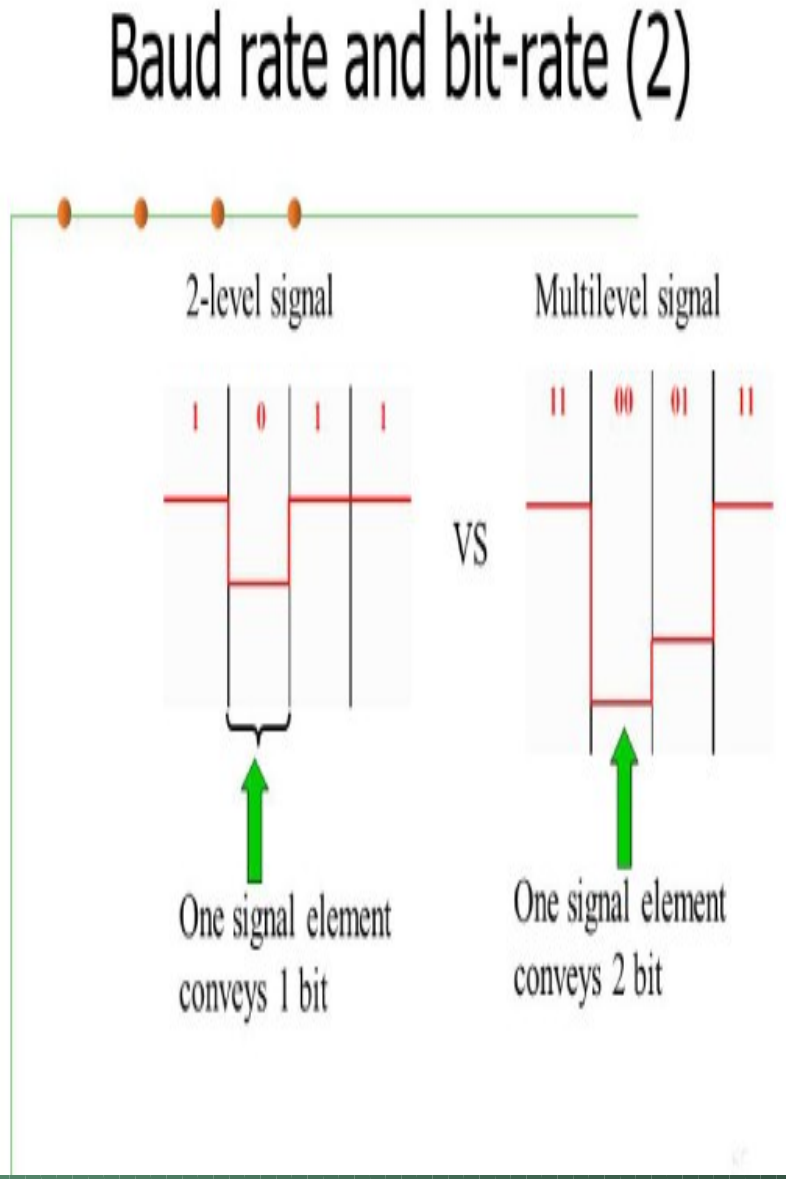

Important diffrence between bit rate and baud rate is that bit rate refers to the number of bits per second where baud rate refers to the number of signal level changes per second. Unit of bit rate is bits per second where the unit of baud rate is bauds per second. Bit rate and baud rate are same in the binary signaling. Bit rate and baud rate are not same in the multi level signaling.

Baud Rate and Bit Rate

- Baud Rate
  - Number of times line changes per second
  - Let baud rate be 4 (4 changes per second)
  - Let bits per line change be 2
  - Therefore the Bit rate = 8 bits per second
  - Bit rate = x2 Baud rate in this example

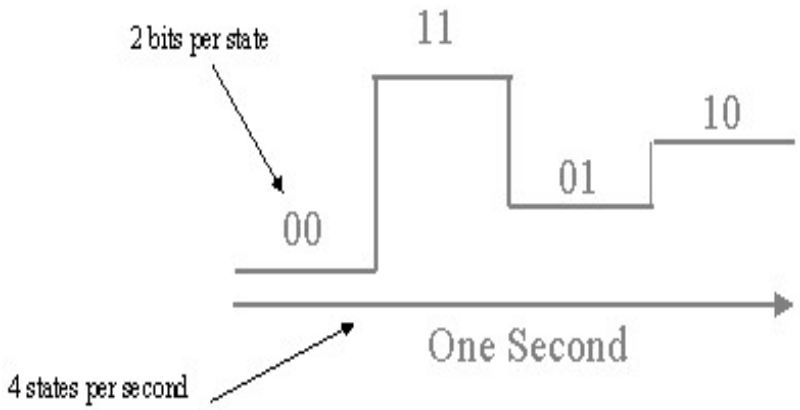

There are three mechanisms for modulating digital data into an analog signal: amplitude shift keying (ASK), frequency shift keying (FSK), and phase shift keying (PSK). In addition, there is a fourth (and better) mechanism that combines changing both the amplitude and phase, called quadrature amplitude modulation (QAM).

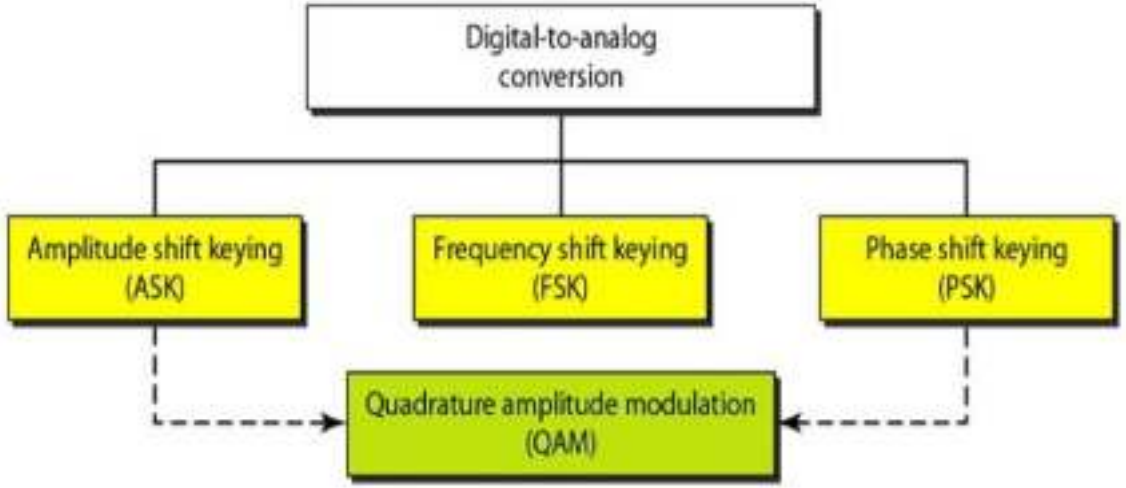

AMPLITUDE SHIFT KEYING :

1. DEFINATION OF ASK
2. MODULATOR AND DEMODULATOR OF ASK
3. ADVANTAGES AND DISADVANTAGES OF ASK

DEFINATION:

Amplitude Shift Keying ASK is a type of Amplitude Modulation which represents the binary data in the form of variations in the amplitude of a signal.

Any modulated signal has a high frequency carrier. The binary signal when ASK modulated, gives a zero value for Low input while it gives the carrier output for High input.

AMPLITUDE SHIFT KEYING

- The following figure represents ASK modulated waveform along with its input.

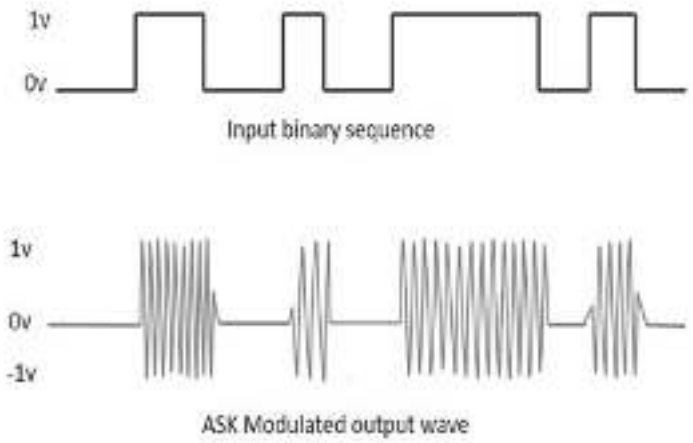

- To find the process of obtaining this ASK modulated wave, let us learn about the working of the ASK modulator.

ASK MODULATOR:

The ASK modulator block diagram comprises of the carrier signal generator, the binary sequence from the message signal and the band-limited filter. Following is the block diagram of the ASK Modulator.

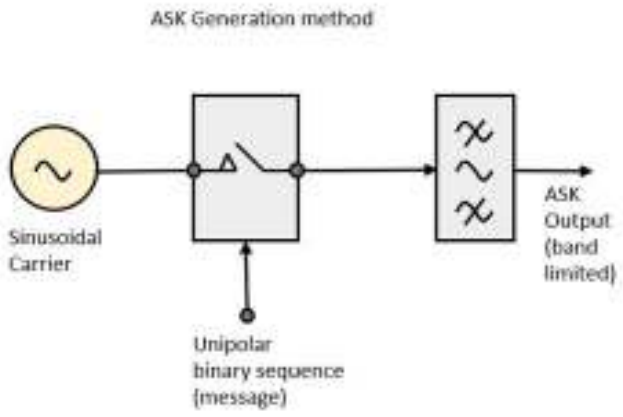

ASK DEMODULATOR:

There are two types of ASK Demodulation techniques.
They are :

- Asynchronous ASK Demodulation/detection
- Synchronous ASK Demodulation/detection

ADVANTAGES OF ASK

FOLLOWING ARE THE BENEFITS OR **ADVANTAGES OF ASK MODULATION**.

1. IT OFFERS HIGH BANDWIDTH EFFICIENCY.
2. IT HAS SIMPLE RECEIVER DESIGN.
3. ASK MODULATION CAN BE USED TO TRANSMIT DIGITAL DATA OVER OPTICAL FIBER.
4. ASK MODULATION AND ASK DEMODULATION PROCESSES ARE COMPARATIVELY INEXPENSIVE

DISADVANTAGES OF ASK

FOLLOWING ARE THE DRAWBACKS OR **DISADVANTAGES OF ASK MODULATION**.

1. IT OFFERS LOWER POWER EFFICIENCY.
2. ASK MODULATION IS VERY SUSCEPTIBLE TO NOISE INTERFERENCE. THIS IS DUE TO THE FACT THAT NOISE AFFECTS THE AMPLITUDE. HENCE ANOTHER ALTERNATIVE MODULATION TECHNIQUE SUCH AS BPSK WHICH IS LESS SUSCEPTIBLE TO ERROR THAN ASK IS USED

FREQUENCY SHIFT KEYING

1. Defination of FSK

2. Modulator and Demodulator of FSK

DEFINATION:

Frequency Shift Keying FSK is the digital modulation technique in which the frequency of the carrier signal varies according to the digital signal changes. FSK is a scheme of frequency modulation.

The output of a FSK modulated wave is high in frequency for a binary High input and is low in frequency for a binary Low input. The binary 1s and 0s are called Mark and Space frequencies.

FREQUENCY SHIFT KEYING

- The following image is the diagrammatic representation of FSK modulated waveform along with its input.
-

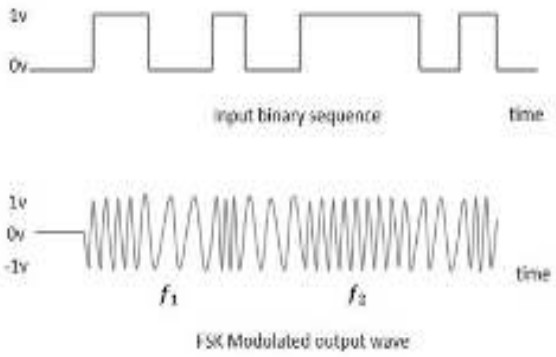

FSK MODULATOR:

The FSK modulator block diagram comprises of two oscillators with a clock and the input binary sequence. Following is its block diagram.

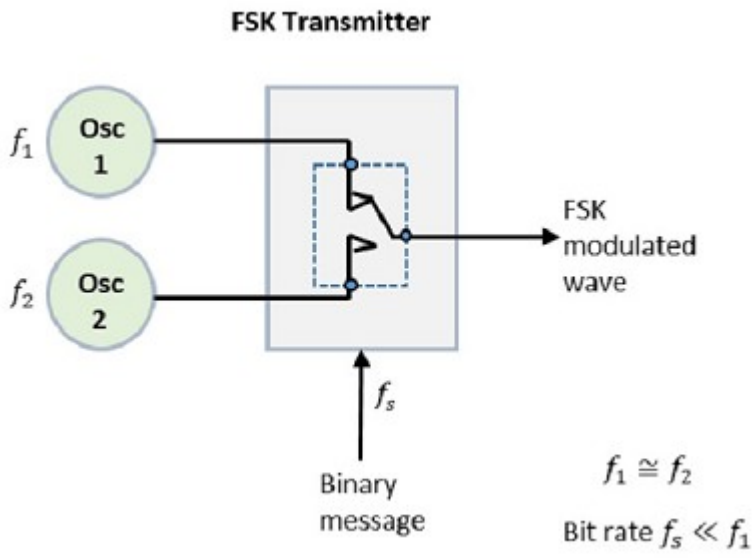

FSK DEMODULATOR:

There are different methods for demodulating a FSK wave. The main methods of FSK detection are asynchronous detector and . The synchronous detector is a coherent one, while asynchronous detector is a non-coherent one.

1. asynchronous detector
2. synchronous detector

PHASE SHIFT KEYING(PSK)

1: Definition of PSK

2:Types of PSK

3:Advantages and Disadvantages

DEFINATION:

The Phase Shift Keying is one kind of digital modulation method. This kind of method is used to transmit data by modulating otherwise changing the phase of the carrier signal which is known as a reference signal. The digital data can be represented with any kind of digital modulation method by using a limited number of separate signals

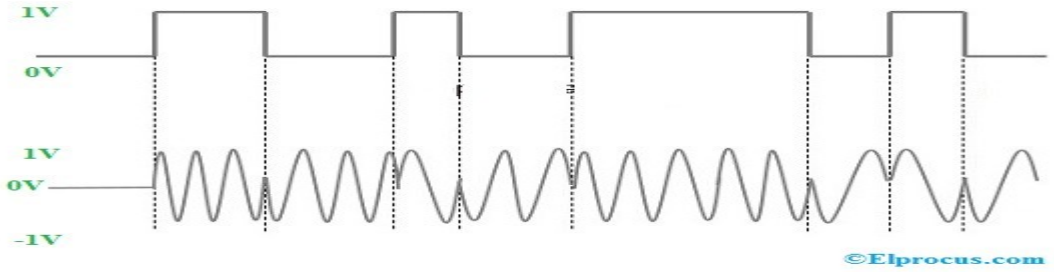

TYPES OF PSK

The PSK can be classified into two types which include the following.

1:BPSK – Binary Phase-Shift Keying
2:QPSK – Quadrature Phase-Shift Keying

1. BPSK – BINARY PHASE-SHIFT KEYING

In this method, the arrangement of constellation points is not a matter where exactly they are placed. This type of modulation is strong to all the PSKs as it takes the maximum level of noise otherwise to distortion to make the demodulator attain an incorrect decision. However, it is only able to modulate at 1 bit per symbol and is not suitable for applications like high data rate.

2. QPSK – QUADRATURE PHASE-SHIFT KEYING

The bit rate can be enhanced by adding more bits on one single segment. In this kind of PSK, the bit stream can be parallelized so that every two incoming bits can be split up & phase shift keying a carrier frequency. One carrier frequency can be phase-shifted with 90 degrees from the other within quadrature. Then the 2 phase-shift keying signals are added to generate one of four signal elements.

ADVANTAGES OF PHASE SHIFT KEYING

- 1: THIS TYPE OF PSK ALLOWS INFORMATION TO BE CARRIED WITH A RADIO COMMUNICATIONS SIGNAL MORE EFFICIENTLY COMPARE WITH FSK.

  2: QPSK IS ANOTHER KIND OF DATA TRANSMITS WHEREVER 4 PHASE STATES ARE UTILIZED, ALL IN 90 DEGREES OF ONE ANOTHER.

  3: IT IS LESS VULNERABLE TO FAULTS WHEN WE EVALUATE WITH ASK MODULATION & OCCUPIES SIMILAR BANDWIDTH LIKE ASK.

DISADVANTAGES OF PHASE SHIFT KEYING

- 1: THE BANDWIDTH EFFICIENCY OF THIS PSK IS LESS COMPARED WITH ASK TYPE OF MODULATION.

  2: BY ESTIMATING THE PHASE STATES OF THE SIGNAL, THE BINARY INFORMATION CAN BE DECODED. ALGORITHMS LIKE RECOVERY AND DETECTION ARE EXTREMELY DIFFICULT.

  3: IT GENERATES WRONG DEMODULATIONS AS THE FAULT CAN COMBINE WITH TIME BECAUSE THE REFERENCE SIGNAL FOR DEMODULATION IS NOT FIXED.

QUADRATURE AMPLITUDE MODULATION (QAM)

WHAT IS QAM?

- A FORM OF MODULATION WHICH IS WIDELY USED FOR MODULATING DATA SIGNALS ONTO A CARRIER USED FOR RADIO COMMUNICATIONS.
- QAM IS A SIGNAL IN WHICH TWO CARRIERS SHIFTED IN PHASE BY 90 DEGREES ARE MODULATED.
- THE RESULTANT OUTPUT CONSISTS OF BOTH AMPLITUDE AND PHASE VARIATIONS.

TYPE OF QAM:

- IT EXISTS IN BOTH **ANALOGUE** AND **DIGITAL** FORMATS.
- THE ANALOGUE VERSIONS OF QAM ARE TYPICALLY USED TO ALLOW MULTIPLE ANALOGUE SIGNALS TO BE CARRIED ON A SINGLE CARRIER.
- IT COMBINES PHASE MODULATION AND AMPLITUDE MODULATION IN A FORM OF MODULATION KNOWN AS QUADRATURE AMPLITUDE MODULATION, QAM
- DIGITAL FORMATS OF QAM ARE OFTEN REFERRED TO AS “QUANTISED QAM”.

QAM THEORY:

- QUADRATURE AMPLITUDE THEORY STATES THAT BOTH AMPLITUDE AND PHASE CHANGE WITHIN A QAM SIGNAL.
- THE BASIC WAY IN WHICH A QAM SIGNAL CAN BE GENERATED IS TO GENERATE TWO SIGNALS THAT ARE 90° OUT OF PHASE WITH EACH OTHER AND THEN SUM THEM.
- THIS WILL GENERATE A SIGNAL THAT IS THE SUM OF BOTH WAVES, WHICH HAS A CERTAIN AMPLITUDE RESULTING FROM THE SUM OF BOTH SIGNALS AND A PHASE WHICH AGAIN IS DEPENDENT UPON THE SUM OF THE SIGNALS.

- AS THERE ARE TWO RF CARRIER SIGNALS THAT CAN BE MODULATED, THESE ARE REFERRED TO AS THE **I - IN-PHASE AND Q - QUADRATURE SIGNALS.**

- THE I AND Q SIGNALS CAN BE REPRESENTED BY THE

EQUATIONS BELOW:

$$I = A \cos(\Psi)$$

$$Q = A \sin(\Psi)$$

- It can be seen that the I and Q components are represented as cosine and sine. This is because the two signals are 90° out of phase with one another.

QAM MODULATOR:

- THE MODULATOR IS USED TO ENCODE THE SIGNAL, OFTEN DATA, ONTO THE RADIO FREQUENCY CARRIER THAT IS TO BE TRANSMITTED.

- THE QAM MODULATOR ESSENTIALLY FOLLOWS THE IDEA THAT CAN BE SEEN FROM THE BASIC QAM THEORY WHERE THERE ARE TWO CARRIER SIGNALS WITH A PHASE SHIFT OF 90° BETWEEN THEM.
- THESE ARE THEN AMPLITUDE MODULATED WITH THE TWO DATA STREAMS KNOWN AS THE I OR IN-PHASE AND THE Q OR QUADRATURE DATA STREAMS.

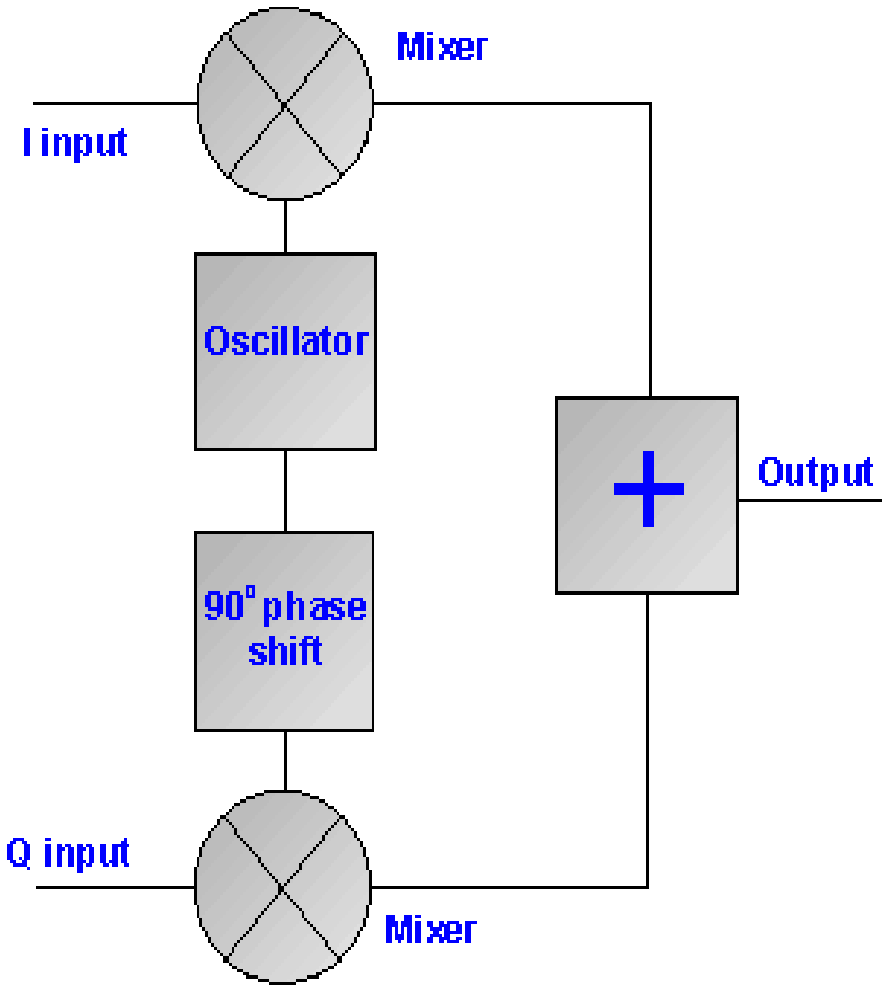

QAM DEMODULATOR:

- THE QAM DEMODULATOR IS VERY MUCH THE REVERSE OF THE QAM MODULATOR.

- THE SIGNALS ENTER THE SYSTEM, THEY ARE SPLIT AND

  EACH SIDE IS APPLIED TO A MIXER.

- ONE HALF HAS THE IN-PHASE LOCAL OSCILLATOR APPLIED AND THE OTHER HALF HAS THE QUADRATURE OSCILLATOR SIGNAL APPLIED.

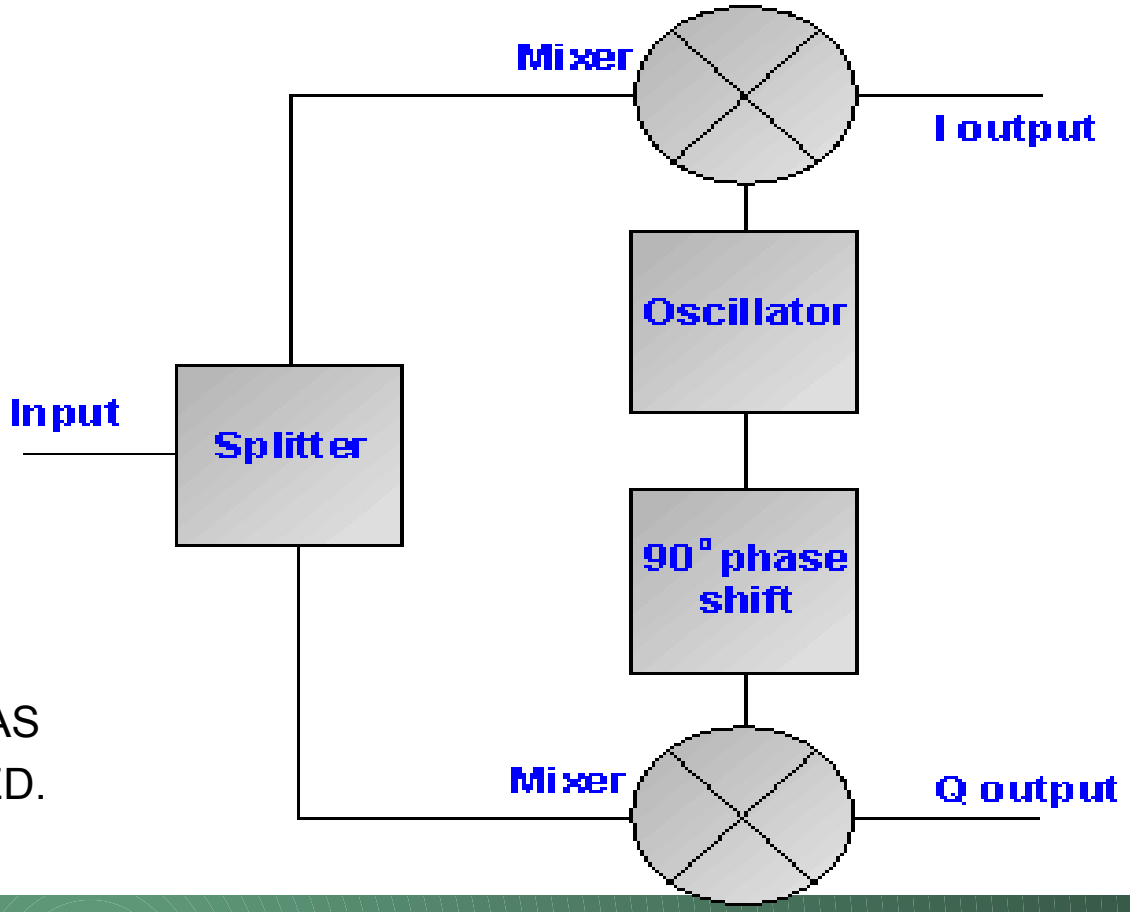

CONSTELLATION DIAGRAMS FOR QAM

- THE CONSTELLATION DIAGRAMS SHOW THE DIFFERENT POSITIONS FOR THE STATES WITHIN DIFFERENT FORMS OF QAM, QUADRATURE AMPLITUDE MODULATION.

- AS THE ORDER OF THE MODULATION INCREASES, SO DOES THE NUMBER OF POINTS ON THE QAM CONSTELLATION DIAGRAM.

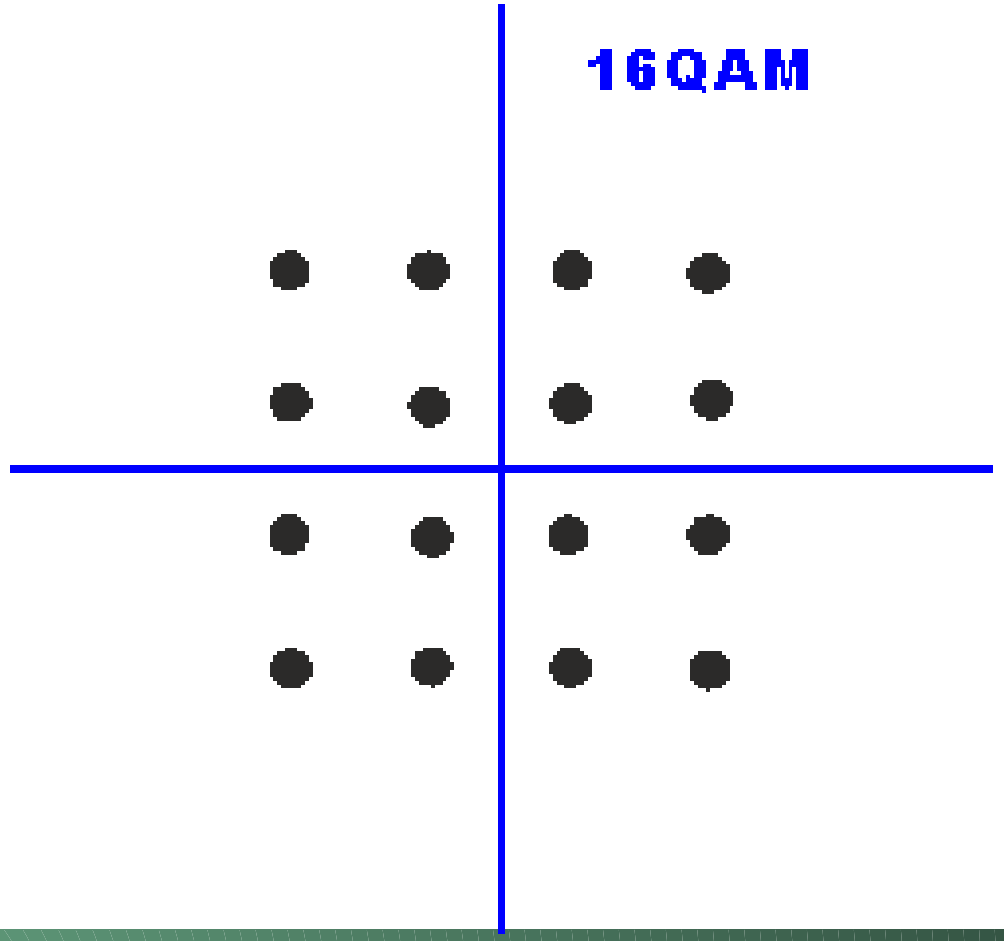

- THE ADVANTAGE OF USING QAM IS THAT IT IS A HIGHER ORDER FORM OF MODULATION.

QAM BITS PER SYMBOL

- AS A RESULT IT IS ABLE TO CARRY MORE BITS OF INFORMATION PER SYMBOL.

- BY SELECTING A HIGHER ORDER FORMAT OF QAM, THE DATA RATE OF A LINK CAN BE INCREASED.

QAM BITS PER SYMBOL:

MODULATION	BITS PER SYMBOL	SYMBOL RATE
BPSK	1	1 x bit rate
QPSK	2	1/2 bit rate
8PSK	3	1/3 bit rate
16QAM	4	1/4 bit rate
32QAM	5	1/5 bit rate
64QAM	6	1/6 bit rate

ADVANTAGES:

- BANDWIDTH EFFICIENCY: TRANSMIT TWO SIGNALS (EACH OF
- BANDWIDTH B) AT 2B.
- MORE DATA CAN BE TRANSFERRED.
- BIT RATE IS INCREASED WITHOUT INCREASING THE BANDWIDTH BY
- INCREASING THE VALUE OF M.

DISADVANTAGES:

- IT IS SUSCEPTIBLE TO NOISE BECAUSE THE STATES ARE CLOSER TOGETHER SO THAT A LOWER LEVEL OF NOISE IS NEEDED TO MOVE THE SIGNAL TO A DIFFERENT DECISION POINT.

Thank
You !