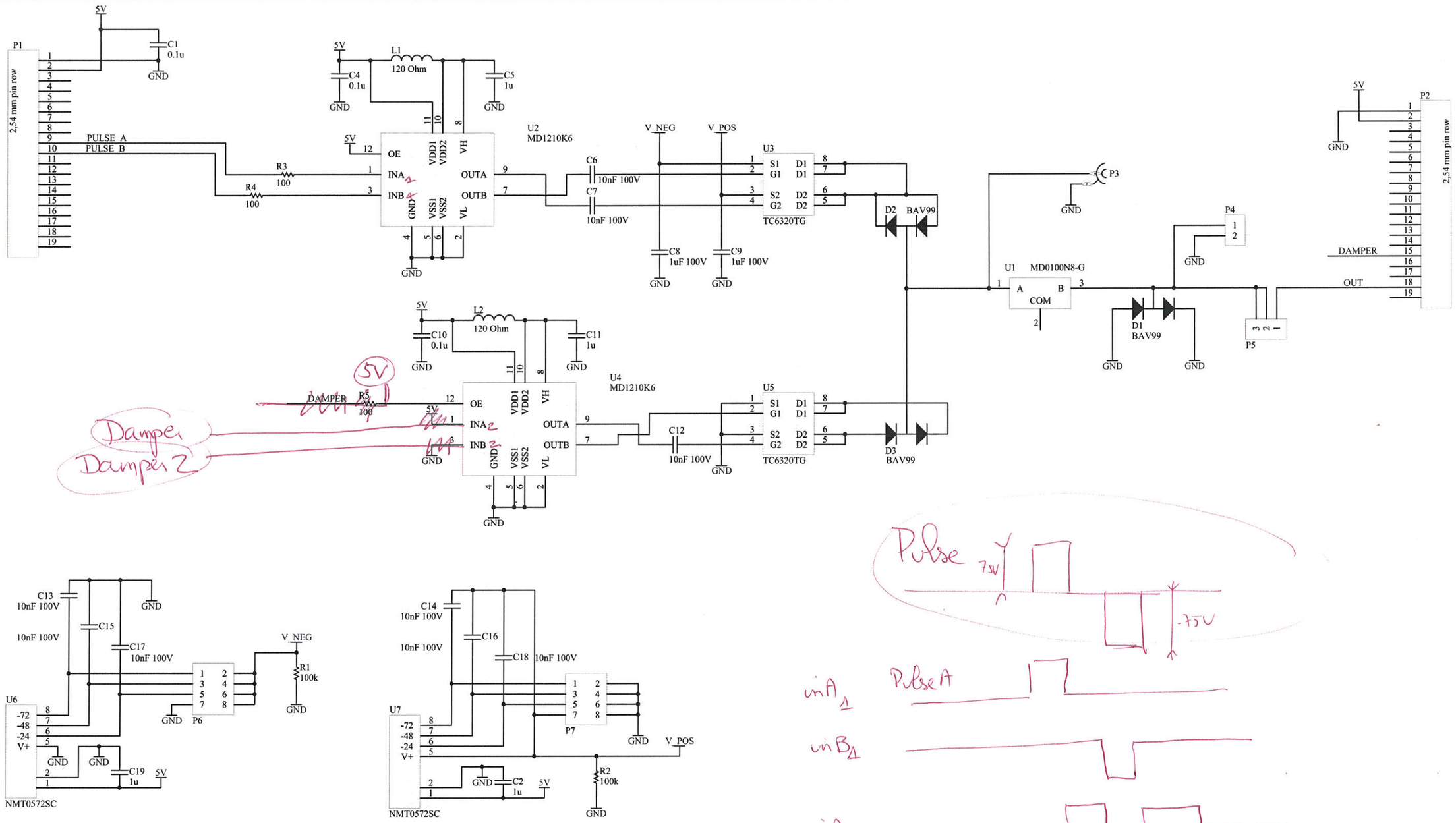
P1
2,54 mm pin row
5V
C1
0.1u
GND
PULSE A
PULSE B
R3
100
R4
100
C4
0.1u
L1
120 Ohm
C5
1u
U2
MD1210K6
OE
INA
INB
VDD1
VDD2
VH
OUTA
OUTB
GND
VSS1
VSS2
VL
C6
10nF 100V
C7
10nF 100V
V_NEG
V_POS
C8
1uF 100V
C9
1uF 100V
U3
TC6320TG
S1
G1
S2
G2
D1
D2
D2 BAV99
D3
BAV99
P3
P4
P5
U1
MD0100N8-G
A
B
COM
D1
BAV99
P2
2,54 mm pin row
DAMPER
OUT
C10
0.1u
L2
120 Ohm
C11
1u
U4
MD1210K6
R5
100
5V
Damper
Damper 2
U5
TC6320TG
C12
10nF 100V
C13
10nF 100V
C15
10nF 100V
C17
10nF 100V
U6
-72
-48
-24
V+
NMT0572SC
C19
1u
P6
R1
100k
C14
10nF 100V
C16
10nF 100V
C18
10nF 100V
U7
NMT0572SC
C2
1u
P7
R2
100k
Pulse
7.5V
-7.5V
inA1
Pulse A
inB1
inA2
inB2