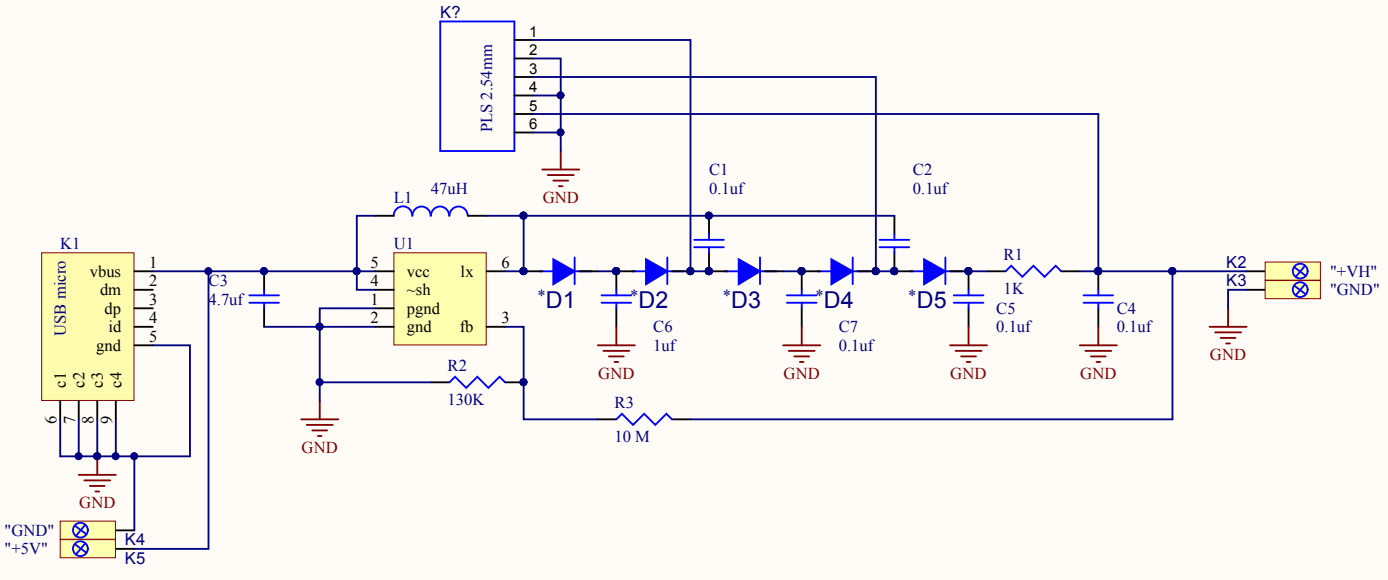

Note!!! Device must be powered exlusively from USB or screw terminals.
There is no protection.

Title		
Size A4	Number	Revision
Date: 04.12.2017		Sheet of
File: D:\my_work\luc\max5025.SchDoc		Drawn By: