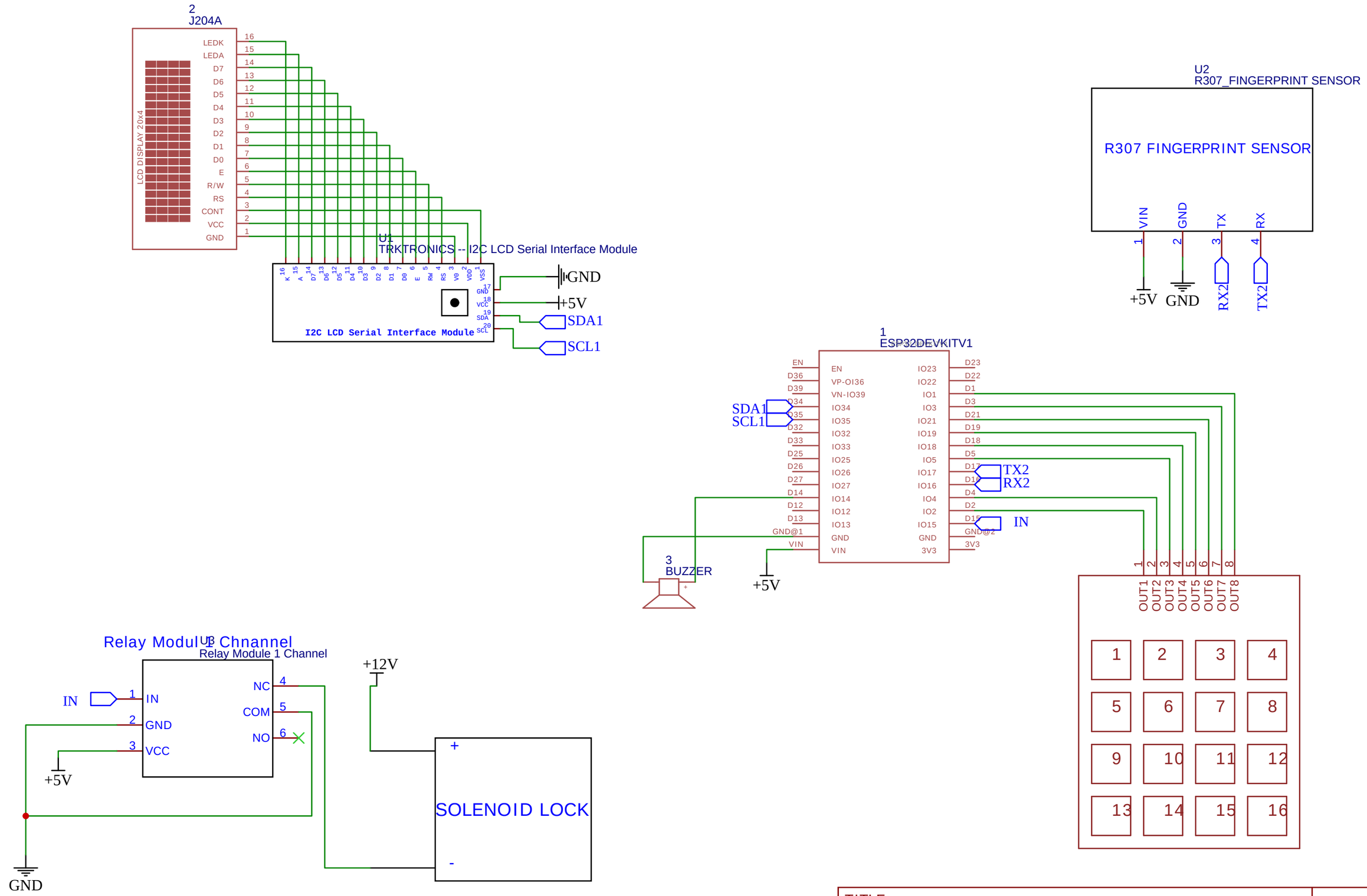

TITLE: Door lock	REV: 1.0
EasyEDA	Company: SafeNet — Sheet: 1/1
	Date: 2021-10-24 — Drawn By: kanishka dilhan

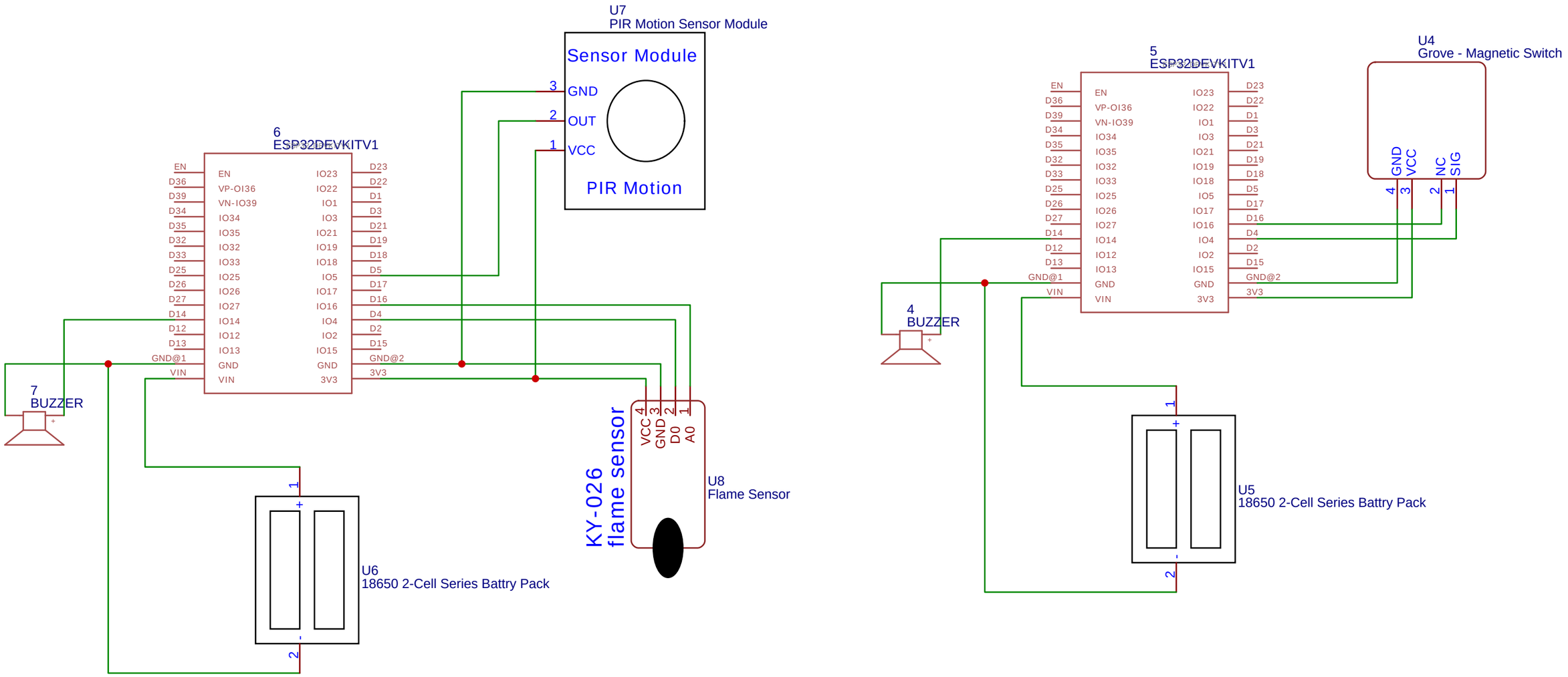

TITLE: Door/window and flame/Motion sensors		REV: 1.0
EasyEDA	Company: SafeNet	Sheet: 1/1
	Date: 2021-10-25 Drawn By: kanishka dilhan	