Rick's Chicks Report

Engineering 1282.01H

Spring 2020

Brian Duffy

John Kim

Tanner Mulhern

Wilson Wu

R. Freuler / C. Lane Mon/Wed/Fri 12:40

Date of Submission: 04/20/20

Executive Summary

The Rick's Chicks team is comprised of four students at The Ohio State University. John Kim specializes in Computer Science and Engineering (CSE), as does Brian Duffy. Wilson Wu and Tanner Mulhern both specialize in Chemical and Biomolecular Engineering (CBE). The Rick's Robot team Rick's Chicks aims to provide a low cost, yet effective and efficient way of automating various tasks at Carmen's Diner. The robot designed by Rick's Chicks was tasked with travelling through a scale model of Carmen's diner while completing a series of tasks, all in a precise and timely manner. More specifically, the goal was to complete the course in under two minutes with a robot that was completely autonomous, fit within a 9" x 9" box, and had a height less than 12". The robot course had a large set of diverse tasks to complete including beginning the course once signaled by a red light, depositing a tray into one of two locations, pushing one of two jukebox buttons based on another colored signal, sliding an order ticket, flipping a burger, flipping an ice cream lever, and lastly, pushing a final button after all other tasks had been completed. Based on results from three performance tests performed by Rick's Chicks' prototype, the robot was on track to consistently complete all required tasks within the time constraint of two minutes. Every performance test was completed successfully by the robot prototype; furthermore, the robot was able to complete an additional bonus task, complete the test before the deadline, or both for every test. The Rick's Chicks team was limited to a budget of $160. By the time the final prototype of the robot was completed, the team had spent $106.03, with $53.97 remaining. Overall, the final robot prototype exceeded expectations by meeting all constraints and completing every performance test, all while staying under budget.

Table of Contents

Rick's Chicks Report ..... *i*

Executive Summary ..... *ii*

List of Figures ..... *v*

List of Tables ..... *vi*

1. Introduction *1*

2. Preliminary Concepts *2*

2.1. Requirements and Constraints **2**

2.2. Brainstorming Process **4**

2.2.1. Drivetrain 5
2.2.2. Chassis 5
2.2.3. Jukebox Button Mechanism 5
2.2.4. Tray Mechanism 6
2.2.5. Ice Cream Flipping Mechanism 6
2.2.6. Ticket-Sliding Mechanism 7
2.2.7. Strategy 7
2.2.8. Mockup 8
2.2.9. Code Representation 9

3. Analysis, Testing, and Refinements *10*

3.1. Developed Concepts **10**

3.1.1. Description of Design 10
3.1.2. Mockup 11

3.2. Analysis of Concepts **12**

3.2.1. Calculations 12
3.2.2. Developed Design 17

3.3. Performance Tests **17**

3.3.1. Performance Test 1 18
3.3.2. Performance Test 2 18
3.3.3. Performance Test 3 19

3.4. Explorations **19**

4. Current Status of Prototype *20*

4.1. Hardware **20**

4.2. Software **23**

4.3. Resources **23**

5. Future Development *24*

5.1. Future Resource Allocation **24**

5.2. Analysis of Projected Design **25**

6. Summary and Conclusions ***26***

6.1. Summary **26**

6.2. Conclusions **27**

References ***29***

APPENDIX A ***A1***

APPENDIX B ***B1***

APPENDIX C ***C1***

APPENDIX D ***D1***

List of Figures

Figure No. Figure Description ..... Page Number

Figure 1: The overhead view of the course. 3

Figure 2: Top two strategies. Strategy one (left) and strategy two (right). 8

Figure 3: Final mockup design for the robot. 9

Figure 4: SolidWorks CAD model of the robot. 11

Figure 5: Dimensions of the chassis and spatula, assuming a 3 to 9-inch height range at the end of the spatula. 14

Figure 6: Dimensions of the tray to be returned by the robot. 15

Figure 7: Dimensions of the spatula. 15

Figure 8: Model of the tray resting on the spatula. 16

Figure 9: Distances of centers of mass of acrylic spatula and tray from the fulcrum. 16

Figure 10: Bottom view of the final robot prototype. 21

Figure 11: Side view of the final robot prototype. 22

Figure A1: Required DC Motor Torque-Speed curves graph. A4

Figure A2: Supplementary image (1) for mockup. A4

Figure A3: Supplementary image (2) for mockup. A5

Figure A4: Overall idea 1 with triangular chassis and spatula arm. A5

Figure A5: Overall idea 2. Rectangular chassis with tread drivetrain, as well as a pickup arm and spatula. A6

Figure A6: Overall idea 3. Triangular chassis with acrylic material. Features a spatula and regular Dubros wheels. A6

Figure C1: Electrical configuration for the Proteus C3

List of Tables

Table No. Table Description ..... Page Number

Table A1: Decision matrices for the first four tasks. A2

Table A2: Decision matrices for the last three tasks..... A3

Table A3: Final, overall design matrix. A3

Table C1: Electrical ports configurations. C2

Table C2: Servo port configuration. C2

Table C3: Motor port configuration.....C3

Table D1: Testing log. D2

1. Introduction

Ever since restaurants have become more popular as a place to dine and relax, restaurateurs have been looking for better ways to serve customers to increase their satisfaction. With numerous patrons who want their order fast and accurate, restaurant employees must be both efficient and precise. Today, as technology progresses, so do advancements in automation that allow for increases in productivity in various industries. Wanting to increase profits, Carmen's Diner is doing just that: introducing automation into its restaurant. After the implementation of online ordering and increased demand at the diner, the owners plan to use robots to handle simple tasks at the restaurant [1]. Through the addition of automation, the efficiency of the diner could be improved while at the same time the human staff can interact with the customers more. The management at Carmen's Diner, along with the Ohio State Research and Development (OSURED) team, has set up a competition to select a robot prototype to be used in the design of the Carmen's Diner Food Establishment Helper in the restaurant [1].

The competition began officially on January 24th, 2020 when OSURED revealed the scenario to engineers. Brian Duffy, John Kim, Tanner Mulhern, and Wilson Wu formed Rick's Chicks company on January 29th, 2020. Throughout the time before the main competition day, the members of Rick's Chicks developed an autonomous restaurant robot with computer-aided design (CAD), computer programming, construction, and engineering design skills. The Rick's Chicks' robot was involved in the planned individual competition on March 27th, 2020 and competed against other companies' robots on the planned date of April 4th, 2020. Due to unforeseen circumstances, the competitions were canceled. On April 20th, 2020, Rick's Chicks presented its developments related to its robot to OSURED.

Next is the Preliminary Concepts section, which details the requirements of the project as well as ideas that were brainstormed to deal with the project's scenario. Section 3, which is Analysis, Testing, and Refinements, presents how Rick's Chicks advanced to the final design from preliminary concepts through analysis, calculations, testing, and refinement. The individual competition, the robot's performance in the competition, and analyses based on the results are described in Section 4. Section 5, Final Design, goes over a detailed description of the final design, along with drawings of the robot and project management. Section 6 describes the planned final competition, the performance of the robot, and results from the competition. Summary and Conclusions is Section 7, which provides an overview of Rick's Chicks' robot project and provides suggestions on future work.

2. Preliminary Concepts

Preliminary concepts began with the individual engineers before the formation of Rick's Chicks. Each engineer brainstormed ideas for the robot, including drivetrains, chassis, and mechanisms to deal with the scenario's various tasks. The individuals' ideas were then combined after Rick's Chicks was formed, which led to the development of preliminary concepts used for the challenges presented by the project.

2.1. Requirements and Constraints

Rick's Chicks' robot was required to perform various restaurant tasks to be successfully implemented at Carmen's Diner. OSURED created a scale model of Carmen's Diner (referred to as the course) to allow for the testing of robot prototypes [1]. Figure 1 on the next page shows an

overhead view of the course. It should be noted that the kitchen area was elevated slightly in comparison to the rest of the diner, which required the robot to navigate between both levels via a ramp.

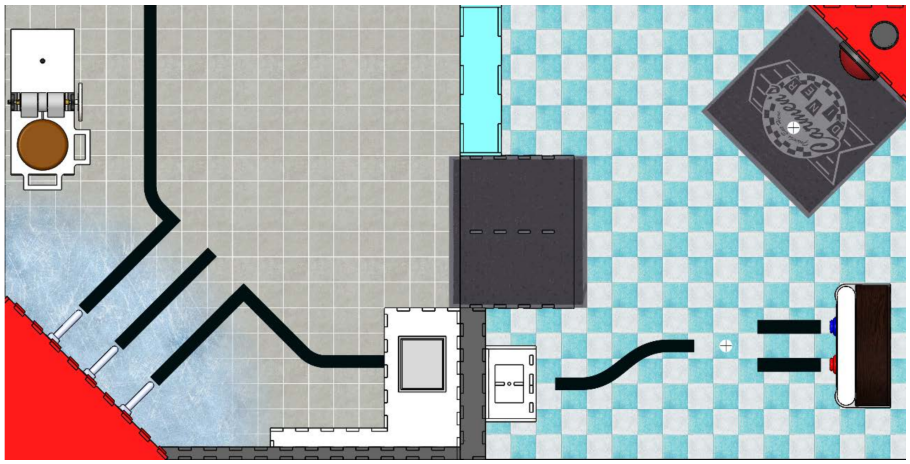

Figure 1: The overhead view of the course.

The restaurant robot was required to complete a set of tasks within two minutes to limit interference with restaurant employees. The first task was to start moving once the starting red-light signal was activated. This signal began the two-minute time limit for the robot to complete the rest of the tasks up until the final task, which was to press the final button next to the welcome mat. Another task the robot had to handle was returning a used tray to the area above the trash can or into the kitchen sink. Additionally, to indicate that the order was in progress, the robot had to slide the order ticket to the end of the ticket booth. Also, the robot had to flip a burger on a hot plate to finish cooking the burger and then return the hot plate to the original position to prepare for the next burger. Another task that had to be completed was to receive an ice cream order through the Robot Positioning System (RPS) and flip the correct ice cream lever. After at least 7 seconds, the robot had to flip the ice cream lever back up. To play music in the diner, the robot also had to select the correct song by pressing the correct color button on the

jukebox that corresponds to the color indicated by the light in front of the jukebox. The final task that had to be completed was pressing the final button in the starting area [1].

In addition to the task requirements for the robot, the robot also had to meet certain specifications. The starting configuration of the robot could not exceed a 9” x 9” footprint and could not be greater than 12” tall. The robot was provided a Proteus microcontroller, which could not be physically modified nor have adhesives on it. However, Velcro could be attached to the sides or bottom of the Proteus. Additionally, the Proteus could not serve as a sensor, structure, or mechanism. The robot could not receive any signals except for RPS, had to have a QR code on it, and had to be fully autonomous. Moreover, the company had a budget of $160 to spend at the FEH Company Store for the robot. Further descriptions of the requirements can be found in the scenario document [1].

2.2. Brainstorming Process

Each engineer brainstormed drivetrain and chassis combinations, mechanisms to deal with each task, and course strategies. After the formation of Rick’s Chicks, the engineers shared ideas and produced a few new ones together. Decision matrices were used to rate each idea based on various criteria such as cost and ease of construction to determine which ideas would be best in the prototype. Specifically, ideas were given a numerical point value between 1 and 5 for each criterion, which had different weighting based on the importance of the criterion, and the idea with the greatest total points was chosen for the specific category. The decision matrices used for brainstorming may be found in Appendix A Tables A1-A3. After combining various results from the decision matrices, they were made into overall ideas, with sketches of these overall ideas in Appendix A Figures A4-A6.

2.2.1. Drivetrain

The team brainstormed four different drivetrains for the robot. One idea was that the prototype should have three regular wheels, with one wheel in front and two powered wheels in the back. Another idea was like the idea previously mentioned, but that the two powered rear wheels would be omni-wheels. There was also a proposal that the rear omni-wheels should be on the outside of the chassis rather than on the inside. The fourth idea was to use tracks or treads. With the decision matrix, the team chose to use the design with one wheel in front and two powered omni wheels in the back that were located outside of the chassis.

2.2.2. Chassis

The engineers at Rick's Chicks also produced chassis to pair up with the drivetrain. There were two chassis that were proposed. One chassis was an acrylic frame to house the road wheels, idler wheels, return rollers, drive sprockets, and mechanisms for the drivetrain based on tracks. The other idea for the chassis was that there would be a triangular acrylic frame for the three-wheeled drivetrain designs, where the front of the triangle would house the front unpowered wheel. Some of the criteria in choosing the chassis were the price of the material per inch, how durable the material was, and how accessible the material was. After these ideas were examined with a decision matrix and the material criteria, the triangular acrylic chassis was chosen.

2.2.3. Jukebox Button Mechanism

Several ideas to handle the jukebox button were devised. One was that there would be a backward bump on the chassis that could be used by the robot to ram into a button. Another idea involved the use of a flat plane on the front of the chassis, which the robot could use to ram a

button by driving towards it. A third idea that was similar to these was that there would be a stick in the front that could be used to poke a button when the robot drove forward. With the decision matrix, it was found that the stick on the front acquired the most total points.

2.2.4. Tray Mechanism

Four different ideas were brainstormed to deal with returning the tray. One involved a spatula that holds the tray until deposited by tilting the spatula slide forward. Another idea was a stick that went through the handles of the tray. Once retracted, the collection surface pushes the tray off the stick and into the collection area. The third mechanism was a claw arm to hold and release the tray. The fourth idea was the robot bumping into the sink such that the tray would go forward into the sink when collided. The decision matrix for this mechanism suggested that the spatula slide was the best idea.

2.2.5. Ice Cream Flipping Mechanism

There were four mechanisms devised to deal with flipping the levers at the ice cream station. The same spatula from the tray mechanism could also be used for the levers by tilting the spatula up and down to flip the lever. An additional idea was that there would be an arm gripping the sides of the levers, and the arms would move up and down to switch the lever up and down. An alternative idea was that instead of gripping the sides of the levers, the arm would grip the top and bottom of the levers. The last idea for the ice cream mechanism was that there would be a flat arm that could raise and lower to flip the levers. The decision matrix for this section determined that the spatula would be the best idea out of the four ideas.

2.2.6. Ticket-Sliding Mechanism

Four suggestions for the ticket system were made. The first suggestion involved a base plate sticking out of the chassis so the robot can maneuver behind the ticket and slide it. Another idea involved a retractable arm that would extend behind the ticket, and then rotate the arm to slide the ticket over. The third idea was a part sticking out of the back of the previously mentioned spatula mechanism that could be used similarly to the first idea mentioned. The final idea was that there could be a part sticking out of a claw arm that would be used similarly to the other stick-out parts previously mentioned. The standalone stick-out part was determined to be the best choice using a decision matrix.

2.2.7. Strategy

The team at Rick's Chicks produced two different strategies for the robot course. Strategy two, the chosen strategy, would first move the robot to press the jukebox button that corresponds to the jukebox light. Next, the robot would go up the ramp to deposit the tray into the sink. After this task, the robot would flip the lever down and up at the ice cream area, and then proceed to flip the hamburger. After the burger task, the robot would go to the order ticket to slide it over. Then, the robot would go down the ramp and press the end button. The first strategy has the same steps until after the jukebox button task. Instead of going up the ramp, the robot would deposit the tray above the trash, and then go up the ramp. After arriving in the kitchen area, the robot would then flip the lever at the ice cream station before flipping the burger. In the second strategy, the order of steps after the burger flip is the same as the first strategy. The criteria used to choose the strategy involved the speed of the route, ease of programming, and how it suited

the robot design. The second strategy was chosen because it would be easier to program, and it was the faster route. Figure 2 below, displays both strategies.

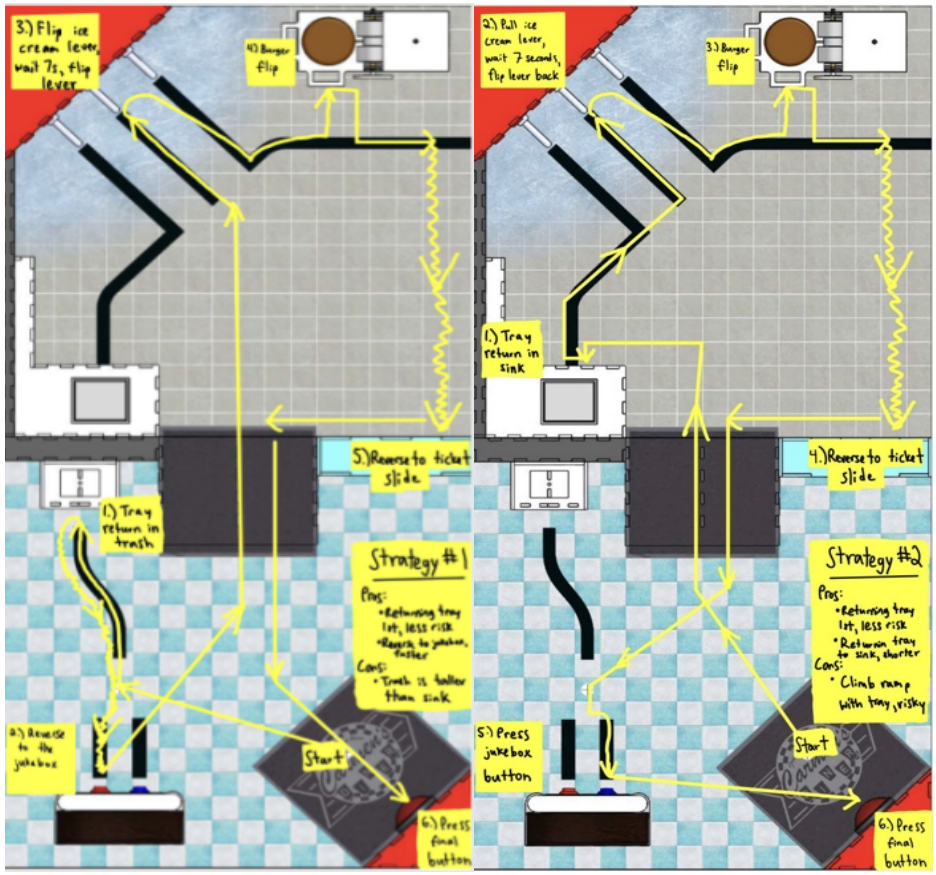

Figure 2: Top two strategies. Strategy one (left) and strategy two (right).

2.2.8. Mockup

The material chosen for the mockup was cardboard since it was decided that it would be easy to work with. Wooden chopsticks and straws were also used for supporting structures and axles. To hold it all together, duct tape was the primary adhesive. The mockup features two spinning wheels in the back and a caster wheel in the front. Additionally, there was a tray to hold the Proteus, a straw that can extend out the back, a spatula mechanism that can flip up and down,

and a QR code holder above the rest of the robot. A picture of the mockup is shown in Figure 3 below, with additional photos of the mockup shown in Figure A2-A3 in Appendix A.

Figure 3: Final mockup design for the robot.

2.2.9. Code Representation

The code representation consisted of a main function where it took multiple Sequence objects, each fitted to complete a basic task such as moving, turning, or color detection. Larger, more complicated tasks would consist of using multiple basic tasks to complete the larger task. The Sequence class was an abstract class that other sequence types would inherit. At its core, the Sequence class would have only one function to execute the given task and a time-out duration variable. Each inherited object would have the bulk of the code already instantiated within the constructor or another function. The inherited execute function would then call the desired function of the subclass or would do all the processing within the execute function itself. All the main

functions would have to do was instantiate each sequence object and use the object's execute function in the correct order.

3. Analysis, Testing, and Refinements

This section includes the analysis of the robot's design and software architecture as well as the results of the designs and overall improvements to flaws with the robot.

3.1. Developed Concepts

This section includes the developed concepts of the final robot. This includes the finalized CAD design as well as a mockup of the overall design and the analysis both. This section also includes the analysis of the finalized strategy and why that strategy was picked over the others.

3.1.1. Description of Design

A SOLIDWORKS model of the robot was made as a reference for the construction of the robot. There were two regular wheels powered by two IGWAN motors in the rear, with a skid in the front as a placeholder for the omni-wheel. The CAD model features mainly acrylic as the material of choice. There is a QR code holder that is above the rest of the robot. There is also a rack and pinion at the back of the robot that can extend and retract to deal with the ticket sliding. Additionally, there is a spatula mechanism that could go up and down to deposit the tray, flip the ice cream levers, flip the burger, and push the buttons. A picture of the CAD model is shown in Figure 4 on the next page.

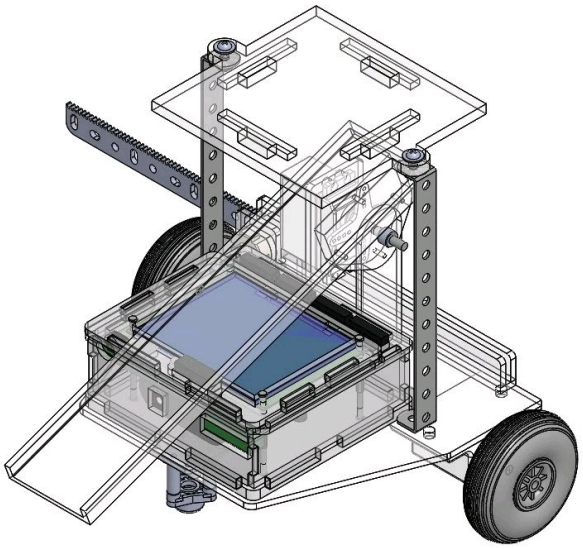

Figure 4: SolidWorks CAD model of the robot.

3.1.2. Mockup

The purpose of the mockup was to give a representation of the initial robot design. After reviewing the previous ideas and concepts, the team at Rick's Chicks decided to build a physical mockup of overall idea 3 from Table A9 in Appendix A with some changes. For example, the omni-wheel was replaced with a caster wheel for the mockup since it was not feasible to make an omni-wheel out of cardboard. This caused the initial design to be refined to a caster wheel instead of an omni-wheel. The shape of the chassis was changed, and the mechanisms were relocated to accommodate for the size of all mechanisms, required parts, and the Proteus itself. The mockup initially had issues with the bottom skids and its ability to move up the ramp. Because of this, the initial skid designs were changed to spoons which allowed smooth movement up the ramp. Overall, the basic structure and placement of each mechanism were represented by the mockup and did not change in the initial design.

3.2. Analysis of Concepts

This section details the analysis of the design calculations and design concepts. The analysis of the design calculations used to find the most optimal motor for general driving purposes and spatula turning purposes. The design concept section outlines analyses the strengths and weaknesses of the final design. Finally, the performance test section describes the results of such design calculations and design concepts.

3.2.1. Calculations

From the developed strategy, there was a total of 174 inches of traveling for the robot to run through the course. It was also estimated that there will be a total of 43.5 seconds to complete every task. The total driving time was calculated to be 76.5 seconds and the total inches per second needed for the robot to drive was 2.275 inches per second. This calculation was rounded up to 2.5 inches per second to account for a margin of error. The radius of the wheels for the robot is 1.25 inches with a circumference of 7.85 inches. The wheel was then calculated to have 19.1 revolutions per minute. The robot was then measured to have 37.6 ounces of weight. The angle of the ramp was calculated by measuring the hypotenuse of the ramp (9.5 inches) and getting the length and height of the ramp (9 inches and 3 inches, respectively). The angle was calculated to be 18.4 degrees.

$$F_{motor} = Wsin(\theta) + F_{internal} \tag{1}$$

The total force required for the motors was calculated to be $F_{motor} = 19.87\ ounces$. The torque was calculated using Equation 2 below.

$$\tau = R * F_{motor} \tag{2}$$

The torque was calculated to be $24.84\ ounce\ inches$. The total torque for one motor was calculated to be 12.42 ounce-inches. Finally, using the graph from Figure A1 in Appendix A, a motor was selected that matched the required revolutions per minute and the torque. Since all the motors were in the range of the requirements, the IGWAN motor was chosen because it had the best performance per cost value.

The next calculations were performed to determine which motor would be required for the spatula arm, which was designed to carry the tray, flip the ice cream lever, and possibly flip the burger. Before any torque calculations were made, the team first had to determine the dimensions of the spatula, including total length and length to the fulcrum. After measuring the heights of the sink, trash can, ice cream lever, and hot plate on which the burger rests, it was determined that the lowest the spatula would need to reach would be three inches above the surface of the course, and the highest it would need to reach would be nine inches above the surface of the course. To allow the Proteus controller to lie flat beneath the spatula, it was decided the spatula's fulcrum would be placed near the back of the chassis directly above the back wheels. After measuring the current dimensions of the chassis, the team was ready to model the size of the spatula necessary for completing each task. On the side of caution, the spatula was modeled to make the total length of the robot 8.5 inches, which was half an inch less than the maximum allowed length. Figure 5 below shows the dimensions of the modeled spatula and chassis with a question mark representing the unknown total length.

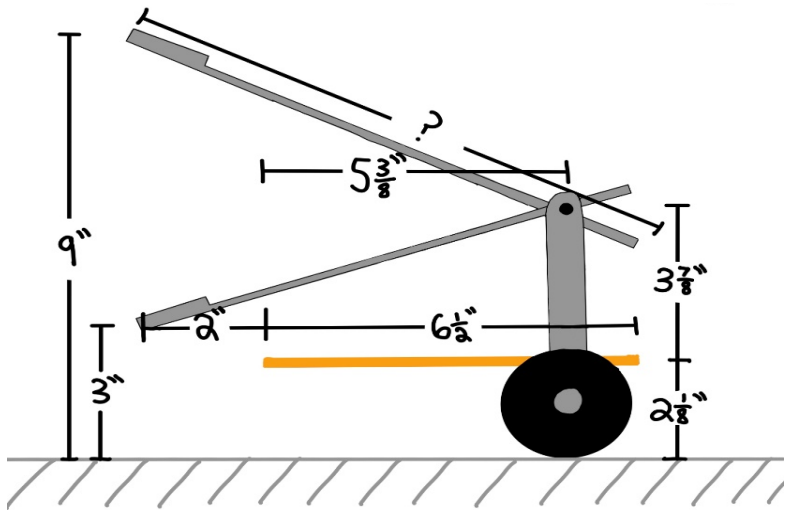

Figure 5: Dimensions of the chassis and spatula, assuming a 3 to 9-inch height range at the end of the spatula.

Next, the known dimensions were used to find the missing dimension, which was also the hypotenuse of a triangle. This similarity allowed for the total length of the spatula to be calculated as 9.176 inches. These calculations, as well as a diagram of the two similar triangles, can be found in Appendix B.

Next, the spatula had to be able to hold the tray, so the tray was measured. The spatula was designed to have the tray sit at the very end in the upright position, with two side walls and a back wall to support the tray and prevent it from falling off. The area where the tray sits was made to be just barely larger than the base of the tray to comfortably hold it while traveling around the course and up the ramp. Dimensions for the tray which sat at the end of the spatula can be found in Figure 6 below.

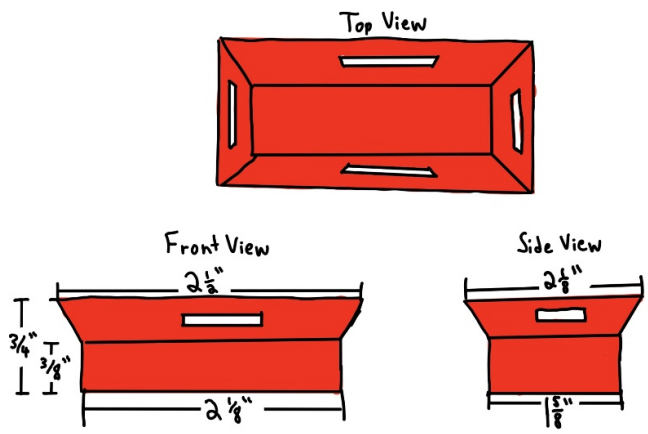

Figure 6: Dimensions of the tray to be returned by robot.

The dimensions of the spatula as well as a model of how the tray should fit into the spatula can be found below in Figure 7 and on the next page in Figure 8, respectively.

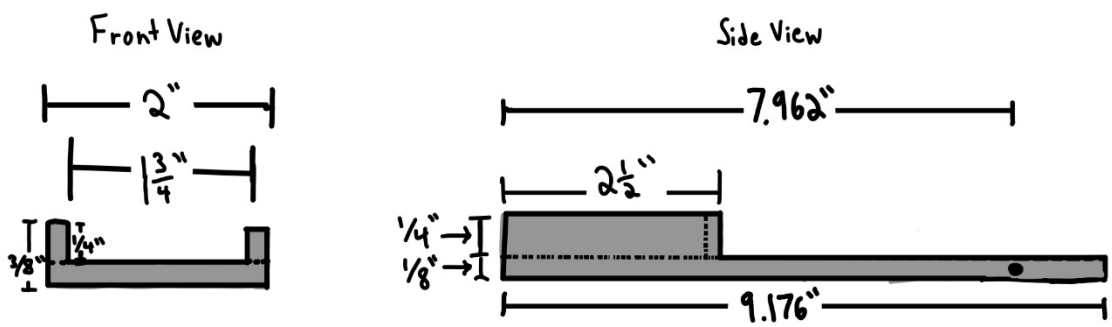

Figure 7: Dimensions of the spatula.

Once the entire spatula had been dimensioned, it was then modeled in SOLIDWORKS using the measurements found in Figure 7. After the spatula was modeled using acrylic for the material, the center of mass and the total mass of the spatula were then found using features found in SOLIDWORKS. The mass of the spatula was found by multiplying the density of the acrylic by the volume of acrylic used. This mass calculation can be found in Appendix B.

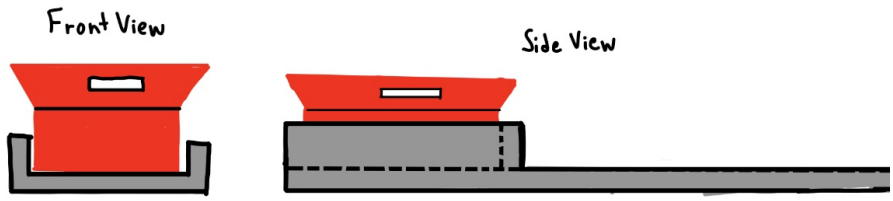

Figure 8: Model of the tray resting on the spatula.

Lastly, the tray itself was weighed to determine how much torque it would cause when placed on the spatula. The weight of the tray came out to be about 58 grams; however, to be safe, the torque was calculated by overestimating the tray's weight as 60 grams, or 0.13228 lbs, or 2.11648 oz. The symmetric nature of the tray allowed the team to assume its center of mass would be at exactly the center of where the tray is resting on the spatula. This information combined with the earlier measurements made in SOLIDWORKS were used in creating the model below in Figure 9.

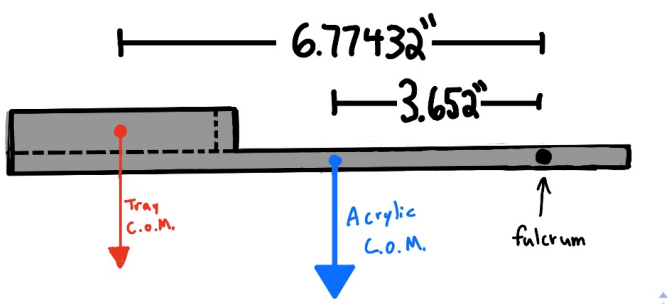

Figure 9: Distances of centers of mass of acrylic spatula and tray from fulcrum.

Using the masses of the tray and spatula in ounces, as well as the distances found in Figure 9 on the previous page, the torque of the spatula and the tray were found as shown in Appendix B. The maximum total torque at the fulcrum was calculated to be about 20.6 oz inches of torque, which was then compared to Figure A1 in Appendix A which shows the torque-speed curves of all the available motors. The torque of every motor exceeded 20.6 oz inches at some speed, and as speed was not a key factor, any servo motor would satisfy for rotating the spatula. In the end, the team selected the Futaba servo motor.

3.2.2. Developed Design

The developed design analysis included the overall strengths and weaknesses of the final design. Some strengths include the simplicity of the overall design and the lack of single-use mechanisms. For example, the spatula mechanism was used for both the tray deposit task as well as the ice cream flip task. The arm mechanism was used for both the hamburger flip and the ticket sliding. Some weaknesses of the final design were that for each mechanism to work, the robot's overall position needs to be exact and free of error.

3.3. Performance Tests

This section outlines the performance tests as well as what went right with the robot and what went wrong with the robot during the performance tests. The strengths and weaknesses are also outlined in each subsection as well as problems encountered with each performance test. Some key preparations the team went through before the performance tests were using trial tests on the course before the performance tests. Adjustments were made accordingly. Another key preparation the team did was evaluating the robot shaft encoding on a table before testing on the course.

3.3.1. Performance Test 1

The robot was able to meet all the requirements for performance test one. The robot could deal with both lights (start and color selector), navigate to the correct jukebox button, press the correct button, and go up and down the ramp fine. The strengths of the design were that the robot was simple, which made it easy to use and program. There were no overcomplicated mechanisms to do the tasks in the first performance test. Some problems that the robot experienced was that the robot did not turn to certain angles accurately. This was a hardware issue since one of the wheels was not directly parallel to the direction of movement. The team adjusted the software to deal with this issue.

3.3.2. Performance Test 2

For the second performance test, the robot could complete all the necessary tasks, including the extra task. Specifically, it was able to go up the ramp, navigate to the sink, deposit the tray into the sink, slide the order ticket completely, and touch the hamburger component of the course. Additionally, the strengths of this design were that the robot was simple. Due to the robot's simplicity, it was easy to program and use without any aspects that were overcomplicated. For example, the spatula mechanism mounted on the back of the robot was mechanically simple yet was multipurpose. It could deposit the tray, flip the ice cream lever, and flip the hamburger. Although in general, the performance test went well, there were still a few issues. Namely, the robot could not consistently slide the ticket completely over; sometimes, the ticket would get pushed enough to physically look like it was complete, but the light underneath the ticket would indicate that it was not complete. Since this issue was attributed to software, the

code could be adjusted to increase the amount the robot turns to ensure that the ticket would be completely slid over.

3.3.3. Performance Test 3

The robot design met the specifications for performance test three well. Specifically, the robot could complete all the necessary tasks for the performance test, except for the bonus task. It could go up the ramp, navigate to the hotplate, initiate and complete the burger flip, and return the hot plate to the starting position. However, the robot was unable to flip any of the ice cream levers due to navigational issues. Since the robot's design remained simple, it was still easy to use and program for the performance test. There was nothing risky or overcomplicated involved with the design. It should be noted that the robot required a lot of trial and error so that it could deal with the burger task. The robot had to be in an extremely specific orientation to successfully perform the task with the spatula mechanism. One major issue that the robot had during the performance test was that it struggled to perform the bonus task consistently. Since its position was wrong quite often, it was unable to accurately flip the lever. It was a software and a hardware related problem, since not only did the code have errors, but there were also improper motor counts and different wheel frictions that were not accounted for. The software could have been adjusted to remove the errors and the hardware could have been readjusted (such as replacing rubber bands on wheels) to mitigate the issue.

3.4. Explorations

Some key design features were implemented from takeaways from explorations. Key features include shaft encoding, line-following, CdS configuration, and RPS configuration. Shaft encoding configuration allowed the team to determine how many counts the robot needed per

inch. The line following takeaway allowed the team to configure the robot to be able to follow a black line, which was needed for the ice cream flip task. The CdS configuration feature allowed the robot to read the start light and jukebox lights. The RPS configuration takeaway gave the robot the ability to read which ice cream lever needed to be flipped as well as allowed a second check of the position of the robot.

4. Current Status of Prototype

While the robot met or exceeded many of its initial design goals, there are some areas where it was incomplete and needed further work to meet the specifications. This section discusses what areas the robot met these specifications and what areas the team still needs to work on.

4.1. Hardware

The hardware of the robot prototype is functionally complete in its current state. As the robot completed all the design tasks with its current design, the team is confident in the current design. While some modifications and improvements can be made to the overall design, as discussed in section 5 – Future Development, all the functional aspects of the robot are complete.

The completed drivetrain consists of two IGWAN motors placed at the rear for power and turning capability. These motors use 2.5” Dubro wheels with rubber bands along the tread surface for additional traction. Supplementing these pieces are two sliding skids made from two plastic foodservice spoons. The spoons provide a smooth surface for the robot to slide along in addition to having a sloped front face allowing the robot to easily ascend and descend ramps. The entire drivetrain can be seen in Figure 10, found on the next page. The motors and spoon skids are

attached to the main chassis piece, which the team cut from an MDF sheet by hand. While not ideal, this chassis held up to the performance tasks and would work for the long-term use of the robot. Additional holes are also cut into the chassis allowing for wires to pass through the chassis from the bottom of the robot and connect to the Proteus.

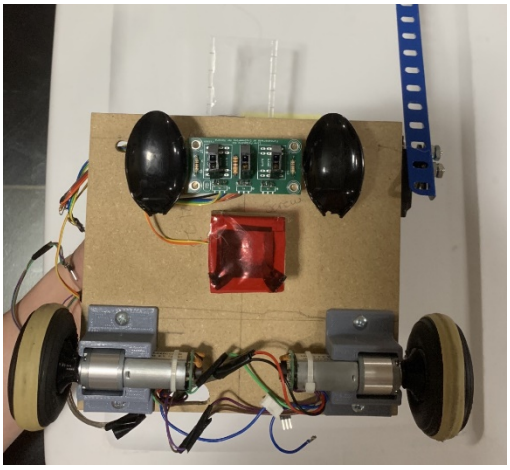

Figure 10: Bottom view of final robot prototype.

The sensors used in the robot design as it stands were a CdS cell, a line following kit, and rotary encoders. The CdS cell detected the starting light and the color of light to select the correct lever on the jukebox and can be seen covered with a red filter in Figure 10. The line following kit, while never used in software as discussed below, would allow the robot to follow the lines found at several key locations on the final course. The line following kit is found directly between the two front skids in Figure 10 above. The robot also used shaft encoders to move a specific distance and rotary encoders to rotate to a specific degree. Using this made it possible for the robot to keep track of its position accurately. The team wired all the mentioned sensors to the Proteus and used them to control the robot's behavior.

For the mechanical aspects, the robot has two motorized arms. Both arms consist of a servo motor attached to the main chassis that rotates a longer armature for course interactions. While

similar in function, the team used these arms very differently on the course. The first arm was the spatula arm, taken from initial slide design, which completed the ice cream lever and the tray deposit tasks. The spatula attaches to the chassis in the center with the fulcrum directly above the wheels. The robot's second arm, a simple lever made by attaching a 7.5" angle girder to a Futaba servo motor, was used for the ticket sliding and burger flip mechanisms. These arms work in conjunction to complete each task successfully and can be seen below in Figure 11.

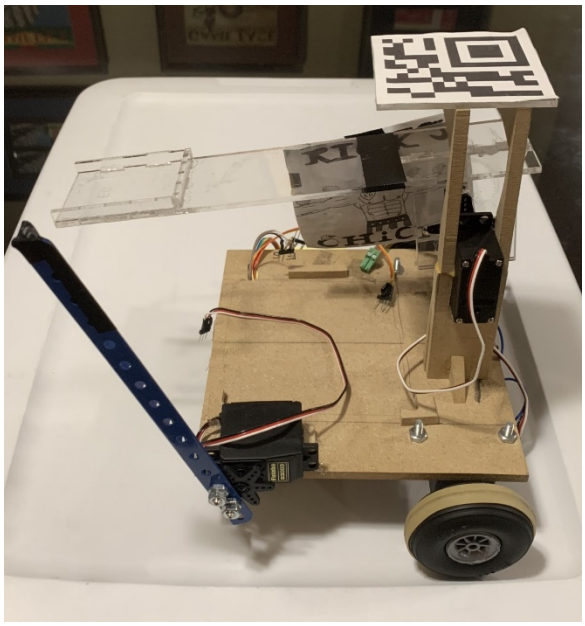

Figure 11: Side view of final robot prototype.

Concerning the hardware, the robot is relatively simple. As such, the methods that the robot uses to deal with each task is not overcomplicated. For example, the robot can use the spatula mechanism to deposit the tray into the sink, flip the hamburger mechanism, and flip the ice cream levers by tilting up and down. The simplicity and versatility of the hardware allows the robot to be cheap yet effective in conducting the necessary tasks.

4.2. Software

The team achieved many software tasks by the end of the project. These included the code for each of the individual performance tests. The team organized the software as three separate main programs, each responsible for one of the performance tests. In addition to these individual programs, there were several support programs the team used to evaluate various aspects of the hardware before it was integrated into the full design. Unfortunately, due to time constraints, the team was unable to build a full main program file. While the groundwork is in place for this main file, there would have to be more development in terms of reliability before the team could build the main program.

The main weakness of the robot was with the software. Specifically, the robot's code did not make use of all the hardware available to the robot. For example, it did not make use of line following nor RPS, which caused inconsistencies in navigation since it relied heavily on shaft encoding. Because of this, the robot misaligned and failed to do the ice cream flip from performance test three. The future robot design would incorporate these other technologies to have more consistent navigation, as discussed later in Section 5.2.

4.3. Resources

The team at Rick's Chicks spent a total of 130 hours working on the robot and related documentation. About 80% of the robot design was handled by Brian Duffy and Tanner Mulhern, about 70% of the documentation and testing was handled by Wilson Wu and John Kim, and 80% of the coding was handled by John Kim and Brian Duffy. Since the team was able to complete the first two performance tests before the deadline, the development of the robot was on schedule. For the 3rd performance test, the development of the robot was ahead of schedule

since the robot completed that test two days before the deadline. In terms of money, the final prototype of the robot was under budget. The team spent $106.03 of the maximum $160 budget, leaving $53.97 left over for the team to use. 62% of the costs came from the drivetrain, the chassis and electronics/sensors had the same amount of costs (about 4% each), the ticketing arm had 18% of the costs, the spatula had 9% of the costs, and the remaining 3% came from miscellaneous purchases such as fasteners and replacement parts.

5. Future Development

5.1. Future Resource Allocation

To finish the prototype, the amount of resources needed would be small compared to resources already used to produce the prototype. In terms of additional money to be used, it would be about $5.52, since the only upgrade needed for the prototype would be a laser cut MDF chassis to have more precise placements of the robot components. Every other component of the robot except for the chassis will be kept since the prototype was able to complete the first 3 of the performance tests, and the existing mechanisms were planned to be used for the tasks in the last performance test. Since all four of the performance tests included all the tasks required for the final competition except for pressing the final button, the robot prototype did not need any additional upgrades except for the chassis.

Despite the small amount of hardware upgrades needed for the robot, there would still be a lot of work that would be needed to be put into the robot. Since the main code for the first three performance tests are all readily available, most of the team's time would be spent combining the code, refining it, and testing the robot on the course. However, the robot was not ready for the last performance test in terms of software, which meant that additional time and team members

would be needed for coding and testing the robot for Performance Test four. The whole team would have to spend around 20 hours of coding and testing so that the final robot design can complete the entire robot course consistently within the two-minute time limit. Overall, in terms of added resources required to complete the robot, it would mostly consist of the time needed for coding and testing the robot.

5.2. Analysis of Projected Design

There would be one major challenge to the future design of our robot, which would be consistency. Based on the three performance tests that the robot took part in, the prototype struggled to do tasks consistently. This was because the navigation was mainly handled by the initial placement of the robot on the starting area and hard-coding distances with shaft encoders. With nothing to check the robot's positioning, the robot did not have a high success rate in being accurate with its tasks. To manage this issue, the final design would have to incorporate navigational checks, such as RPS, to ensure that the robot would be in the right locations to perform its tasks accurately.

Although the robot may have issues with consistency, the coding and testing of the robot would be relatively easy. Since the physical robot design is simple, coding it to complete the entire course would also be straightforward. For example, since some mechanisms on the robot, namely the spatula mechanism, are multipurpose, similar code can be used for each task that it will handle. Another benefit of a simple robot design is that building it is inexpensive. A sizable portion of the budget is still available, which would allow for any mishaps that would require something to be bought. Further, it would be an appealing choice for Carmen's Diner as the robot would meet the specifications at a low price point.

Some projected strengths after this future development is completed would be the ability to have accurate navigation along with its movement speed. With its accurate navigation and speed along with its inexpensive cost of building, most of the initial weaknesses addressed earlier would subside. Some projected weaknesses after this development, however, would be the speed of the RPS checks to make the robot navigate accurately. The robot needs to lower its checking speed to become more accurate when navigating. However, optimizing the accuracy and speed should subside this issue for the future.

6. Summary and Conclusions

Team Rick's Chicks (E6) brainstormed, designed, programmed, and built a robot to run through the Carmen's Diner course. The competition officially began on January 24th, 2020. Once OSURED released the competition scenario on January 29th, 2020, Rick's Chicks was formed. The team brainstormed preliminary concepts, analyzed the success and constraints of such concepts, and decided on the best three overall ideas. Overall idea three was chosen and a mockup of the combined concept was built. This process was described in section 2. The team developed the robot based on the mockup and improved the design through the analysis of the concepts as well as the results of each performance test and explorations. This process was detailed in section 3. While the robot was unable to compete in the competition, the current status of the prototype was shown and is described in section 4. Finally, section 5 details the future allocation of resources as well as an analysis of the robot's projected final design.

6.1. Summary

Through developments and improvements of preliminary concepts, team Rick's Chicks' chassis material and drivetrain were chosen to be MDF ¼ inch wood and a two-wheel drivetrain

powered by IGWAN motors, respectively. To balance the robot, a set of skids made from plastic spoons were used at the front of the robot. To handle depositing the tray and flipping the ice cream lever, a spatula mechanism was added, which was powered by a Futaba servo motor. An angle girder attached to a Futaba servo motor was also used along with the spatula mechanism to flip the burger mechanism. The buttons would be dealt with by the robot ramming the jukebox and final buttons. Additionally, a CdS cell was used to detect light colors on the robot course, and a QR code holder was used for the robot's communication with the Robot Positioning System.

After further testing and completing performance tests, each mechanism was incrementally added on. Throughout the construction of the robot, $106.03 was spent by Rick's Chicks to create the final prototype.

The final prototype of the robot was able to complete the first three performance tests. This version of the robot excelled at simplicity, especially in terms of hardware. As for software, the code was broken up for each performance test. Additionally, the robot had issues with consistency in executing tasks, which was mainly due to software issues. To improve the robot, the Rick's Chicks team would have to transition to a laser-cut chassis for precision and better consistency. Furthermore, the code would be combined and added on to so that the robot can complete all the required tasks consistently fast.

6.2. Conclusions

The robot build effort by the team was partially successful. While the completed aspects of the robot system were successful, some systems still needed work. Every task, except the ice cream lever and final button, was completed in one of the performance tests; however, the robot was not ready to complete the course entirely in one run. Of the tasks completed, the ticket slide,

tray deposit, and button press were the most consistent, relying the least on the robot starting in the right position. The burger flip task was able to be completed, however, it was highly inconsistent and relied heavily on the robot being in an exact starting position. With more time, the team could have made improvements to the burger flip task by using the RPS system and the mounted QR code which had not been used in any test. The team also believes that the robot could complete the ice cream lever and final button tasks with the current hardware on the prototype if the project had more time for testing and writing code. Overall, the team is proud of the final prototype and believes that the fully completed system would have provided a huge efficiency increase for Carmen's Diner.

References

[1] ENGR 1281.01H Design Problem Statement & Specifications, Spring 2020. 2020, February 23. www.carmen.osu.edu

APPENDIX A

Tables and Figures

Table A1: Decision matrices for the first four tasks.

Matrix 1 - Ticket System					
Critera	Weight	Stick out part	Retractable arm	Spatula arm backward stickout	Claw arm stickout
East of Construction	4	5	3	2	1
Reliability	3	3	4	4	1
Easily Programmable	5	5	3	3	1
Accuracy	5	3	3	4	5
Cost	1	5	4	2	1
Total		74	58	57	38

Matrix 2 - Jukebox Button					
Critera	Weight	Backwards Bump	Flat Plane on Robot	Turret Design	Stick on Front
East of Construction	2	5	5	2	4
Reliability	5	2	2	3	3
Easily Programmable	4	5	5	2	4
Accuracy	3	2	2	4	3
Cost	1	5	5	3	5
Total		51	51	42	53

Matrix 3 - Ice Cream					
Critera	Weight	Spatula Lift (tilting)	Gripping Arm (sides)	Gripping Arm (top/bottom)	Raising/Lowering Flat Arm
East of Construction	3	4	3	3	1
Reliability	4	4	4	4	3
Easily Programmable	4	3	3	3	1
Accuracy	4	4	3	3	3
Cost	1	5	3	3	1
Total		61	52	52	32

Matrix 4 - Tray Return					
Critera	Weight	Spatula Slide	Stick Through Hole	Bump into sink, drop tray	Claw arm pickup
East of Construction	3	4	4	5	1
Reliability	4	4	4	1	4
Easily Programmable	2	3	3	5	1
Accuracy	5	5	3	1	4
Cost	1	3	4	5	1
Total		62	53	39	42

Table A2: Decision matrices for the last three tasks.

Matrix 5 - Burger					
Critera	Weight	Spatula Lift	Rotating Arm	Gripping Arm	Rotating and Gripping Arm
East of Construction	3	4	2	2	1
Reliability	4	3	3	4	5
Easily Programmable	4	3	2	2	1
Accuracy	2	4	4	5	5
Cost	1	3	3	2	2
Total		47	37	42	39

Matrix 6 - Final Button					
Critera	Weight	Flat Plane on Robot	Turret Design	Stick on Front	Throw Projectile at it
East of Construction	2	3	1	3	2
Reliability	3	3	2	2	1
Easily Programmable	2	3	1	2	3
Accuracy	3	1	3	2	1
Cost	1	1	4	1	3
Total		25	23	23	19

Matrix 7 - Drivetrain/Chassis					
	Weight	Pointed Triangle	Tracks and Turret	Omni-triangle In	Omni-triangle Out
Manuverability	3	2	2	3	3
Ease of Construction	2	3	3	1	2
Speed	2	2	1	2	2
Usable Sides	1	1	3	2	2
Cost	1	2	1	3	3
Total		19	18	20	22

Table A3: Final, overall design matrix.

Overall Design Matrix			
	Omni-triangle-out + Backwards Bump + Stick out part + Spatula + Flat plane on robot	Tracks and Turret + Backwards Bump + Retractable Arm + Gripping Arm (sides) + Spatula + Turret Design	Stick Out Part + Flat Plane on Robot + Pointed Triangle + Spatula Lift
Drivetrain/Chassis	22	18	19
Ticket System	74	58	74
Jukebox	51	51	51
Ice Cream	61	52	61
Tray Return	62	62	62
Burger	25	25	25
Final Button	25	23	19
Total	320	289	311

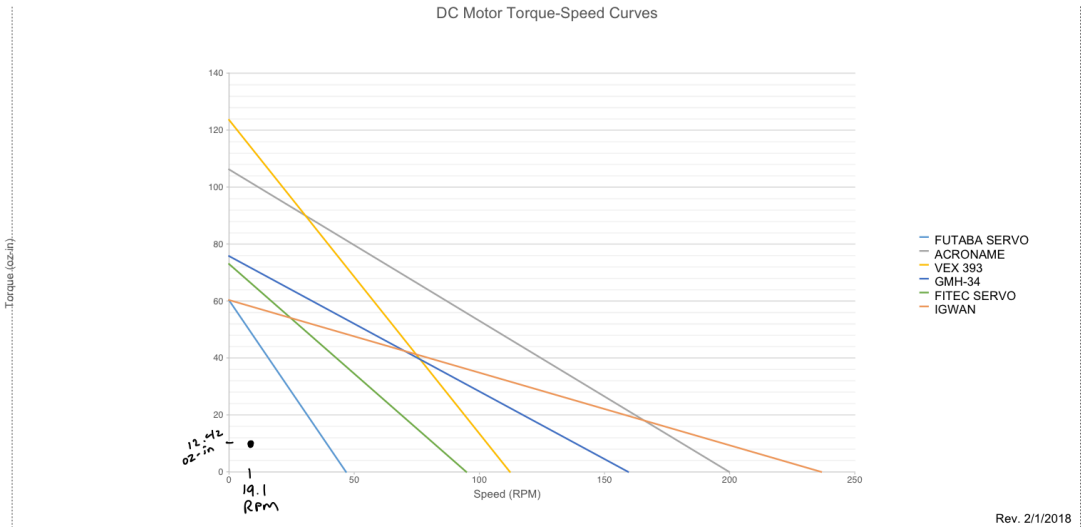

Figure A1: Required DC Motor Torque-Speed curves graph.

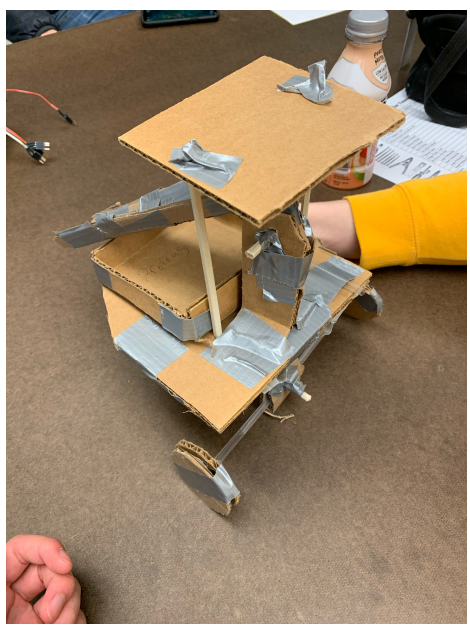

Figure A2: Supplementary image (1) for mockup.

Figure A3: Supplementary image (2) for mockup.

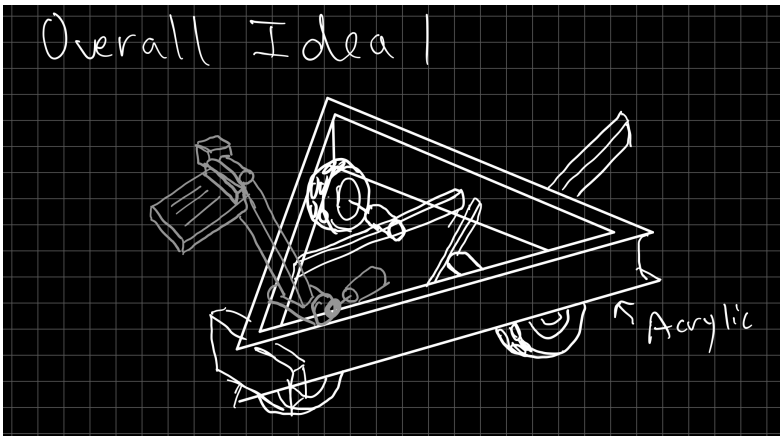

Figure A4: Overall idea 1 with triangular chassis and spatula arm.

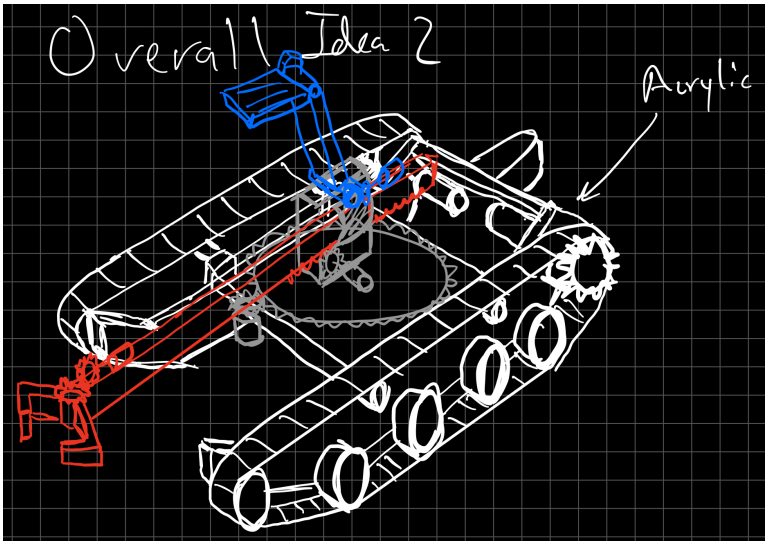

Figure A5: Overall idea 2. Rectangular chassis with tread drivetrain, as well as a pickup arm and spatula.

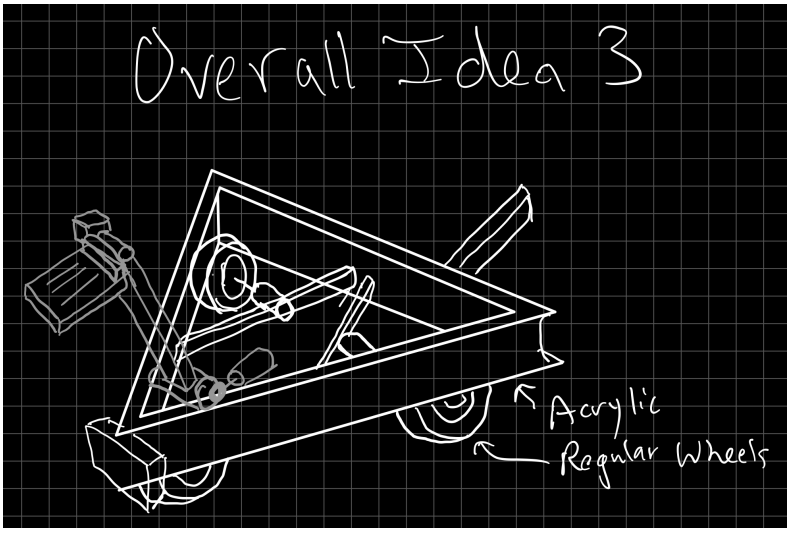

Figure A6: Overall idea 3. Triangular chassis with acrylic material. Features a spatula and regular Dubro wheels.

APPENDIX B

Sample Calculations

Length of spatula calculations:

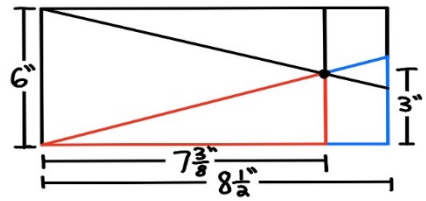

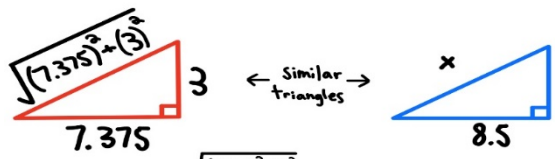

$$\frac{\sqrt{(7.375)^2+(3)^2}}{7.375} = \frac{x}{8.5}$$

$$x = \frac{8.5\sqrt{(7.375)^2+(3)^2}}{7.375} = 9.176''$$

Spatula mass calculation:

$$Density = \frac{mass}{Volume}$$

$$0.0433527\ \frac{lb}{in^3} = \frac{mass}{2.49\ in^3}$$

$$mass\ of\ spatula = 0.10795\ lbs = 1.7272\ oz$$

Torque calculations for spatula and tray:

$$\tau = F \times d$$

$$\tau_{spatula} = F_{spatula} \times d_{spatula}$$

$$\tau_{tray} = F_{tray} \times d_{tray}$$

$$\tau_{spatula} = (1.7272\ oz) \times (3.652\ in)$$

$$\tau_{tray} = (2.11648\ oz) \times (6.77432\ in)$$

$$\tau_{spatula} = 6.3077\ oz\ in$$

$$\tau_{tray} = 14.3377\ oz\ in$$

$$\tau_{total} = \tau_{spatula} + \tau_{tray} = 6.3077\ oz\ in + 14.3377\ oz\ in = 20.645\ oz\ in$$

APPENDIX C

Electrical Design

Table C1: Electrical ports configurations.

Port ID	Wire ID	In-Code Name (Object Name)	Type of Sensor	Purpose	Additional Notes
P0_0	Opto Left	optoL	Optosensor	Detects the left reflectivity of black tape	
P0_1	Opto Middle	optoM	Optosensor	Detects the middle reflectivity of black tape	
P0_2	Opto Right	optoR	Optosensor	Detects the right reflectivity of black tape	
P0_3					
P0_4	CdS Cell Sensor	CdS	CdS Cell	Detects the start light	Red, yellow wire
P0_5					
P0_6	Right Encoder	right_encoder	Shaft Encoder	Collects the counts of the right motor	
P0_7	Left Encoder	left_encoder	Shaft Encoder	Collects the counts of the left motor	
P1_0					
P1_1					
P1_2					
P1_3					
P1_4					
P1_5					
P1_6					
P1_7					
P2_0					
P2_1					
P2_2					
P2_3					
P2_4					
P2_5					
P2_6					
P2_7					
P3_0					
P3_1					
P3_2					
P3_3					
P3_4					
P3_5					
P3_6					
P3_7					

Table C2: Servo port configuration.

Port ID	Wire ID	Variable Name	Type of Servo	Purpose	Additional Notes
Servo0	Spatula Servo	spatulaServo	Futaba Servo	Swing the spatula up and down	red, white, black wire
Servo1	Erector Servo	erectorServo	Futaba Servo	Swing the erector piece up and down	red, white, black wire
Servo2					
Servo3					
Servo4					
Servo5					
Servo6					
Servo7					

Table C3: Motor port configuration.

Port ID	Wire ID	Variable Name	Type of Motor	Purpose	Additional Notes
Motor0	Left Motor	left_motor	Igwan	Drive for left wheel	red, black wire
Motor1	Right Motor	right_motor	Igwan	Drive for right wheel	red, black wire
Motor2					
Motor3					

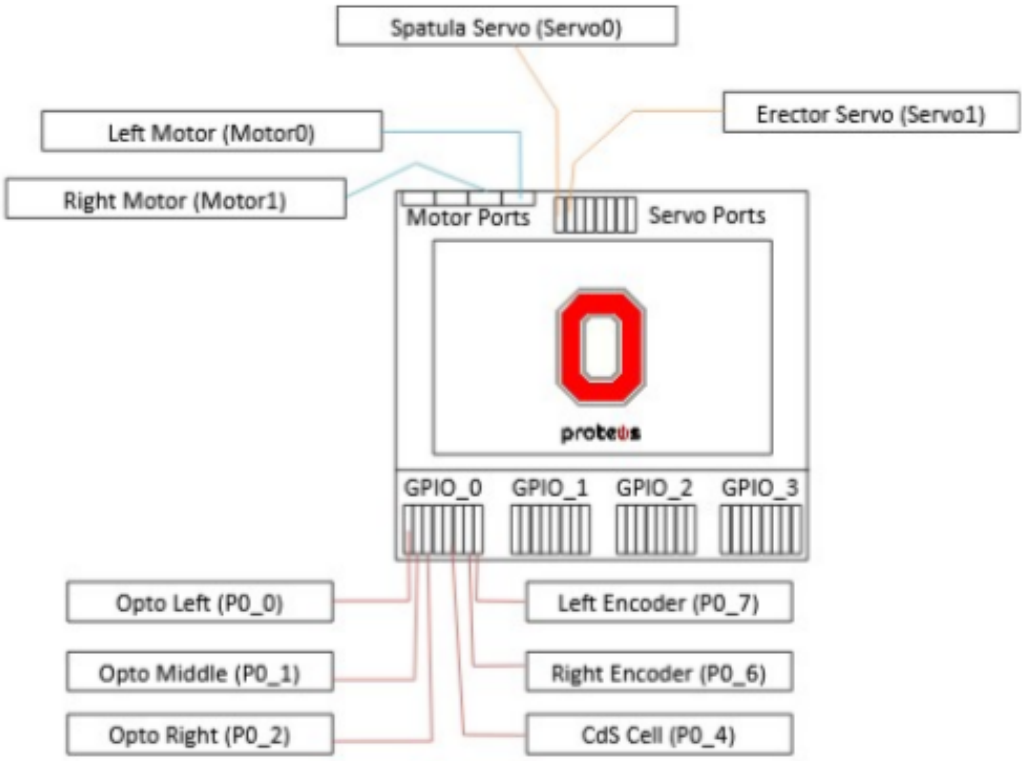

Figure C1: Electrical configuration for the Proteus.

APPENDIX D

Testing Log

Table D1: Testing log

Test	Date	Time	# of Runs	Members Present	Goal(s)	Results/Adjustments Made
Open Lab	2/20/2020	7:30:00 PM to 9:00:00 PM	9	All	Have robot be able to: sense the starting red light, move to jukebox, sense light and press correct button, move to ramp, move up ramp, and move down ramp	The first adjustments we made after the first run were to change the values of the CdS cell in the code that correspond to blue and red, making the ranges wider. We also added a plastic spoon to the front of the robot to push the button, as the front skid of the robot extended past the current piece of MDF that was mounted on the front to press the button. After a few runs we decided to tape down all the wires out of the way, as the robot managed to run over its own wires. Next small adjustment-turns were added after the jukebox color was determined to align the robot with the buttons. At the end of testing, the robot was completing the jukebox button almost every time but had not yet gone up the ramp.
In Class	2/21/2020	12:50:00 PM to 1:00:00 PM	3	All	Have robot be able to: sense the starting red light, move to jukebox, sense light and press correct button, move to ramp, move up ramp, and move down ramp	In the first run the robot was already succesfully pressing the jukebox button, however, the alignment with the ramp was incorrect and for both situations, a red or blue light, the robot would hit the side of the ramp. After some minor adjustments to the turn made before heading up the ramp, the robot was completing all goals for either color light on any of the courses.
Performance Test 1	2/21/2020	1:05:00 PM to 1:06:00 PM	1	All	Pass performance test with all points and bonus	Test was passed with all points and bonus was recieved.
Open Lab	2/25/2020	5:00:00 PM to 5:15:00 PM	3	All	Make sure robot can properly travel up the ramp to deposit the tray	Slight turn adjustments made to make sure robot was centered before travelling up the ramp.
Open Lab	2/26/2020	5:00:00 PM to 6:30:00 PM	8	Brian, John, and Tanner	Be able to pass performance test 2 with all points and bonus	Adjustments first made to make sure robot aligns with wall before attempting to deposit the tray. Robot began havin left wheel free spinning on the way up the ramp causing the robot to unintentionally turn left and not align properly. To fix this rubber bands were purchased and added onto the wheels for more grip on the course. After purchasing and attaching the angle girder to the left side of the robot we began testing using it to slide the ticket. By the end, we were succesfully depositing the tray about 50% of the time and succesfully sliding the ticket and touching the burger almost every time.
In Class	2/28/2020	12:45:00 PM to 1:25:00 PM	3	All	Have robot be able to: sense the starting light, go up the ramp into the kitchen, drop the tray into the sink, slide the order ticket, and touch the burger mechanism	In the first run the robot was able to go up the ramp into the kitchen, but the robot could not consistently align itself to the sink to deposit the tray. The robot would not align flush with the wall, thus making it drop the tray about an inch away from the sink. After some minor code adjustments to the navigation of the robot, the robot could go into the kitchen to despoit the tray, slide the ticket over completely, and touch the burger mechanism; thus the robot was ready for the performance test 2.
Performance Test 2	2/28/2020	1:30:00 PM to 1:35:00 PM	1	All	Pass performance test with all points and bonus	Test was passed with all points and bonus was recieved.
In Class	3/2/2020	2:00:00 PM to 2:45:00 PM	5	All	To be able to raise the hot plate enough to completely flip the burger, using one or both of the servo powered arms.	First, the spatula was tested at full power to see how well it could perform lifting the burger on its own, and although it was able to complete the task once, it was very inconsistent and put a lot of stress on the acrylic spatula which was very valuable to us and would cause huge issues if it were to break. Next the metal ticket sliding arm was tested and was much more successful. Now knowing that the metal arm had enough torque to raise the burger on its own, we began coding and testing the drive up to the burger for performance test 3, which is where we left off at the end of class.
Open Lab	3/3/2020	6:00:00 PM		All	To be able to navigate to the burger, flip it, and return the hot plate to its original posiition. Also, to navigate to and flip one of the ice cream levers once the burger flip is complete.	The robot was first tested to make sure it would align with a wall near the burger flip before navigating to the burger. Next, the robot was tested to find how far certain turns between the alignment and the burger flip should be. After the proper angles were found, the robot was properly facing the burger. Next, due to the left wheel often sagging behind the right, causing the robot to turn, the wheels were glued onto their respective axles to prevent free spinning. Lastly, after the robot properly flipped the burger, the robot was coded to back up, turn slightly to the right, and then use the same arm to lower the hot plate back down.