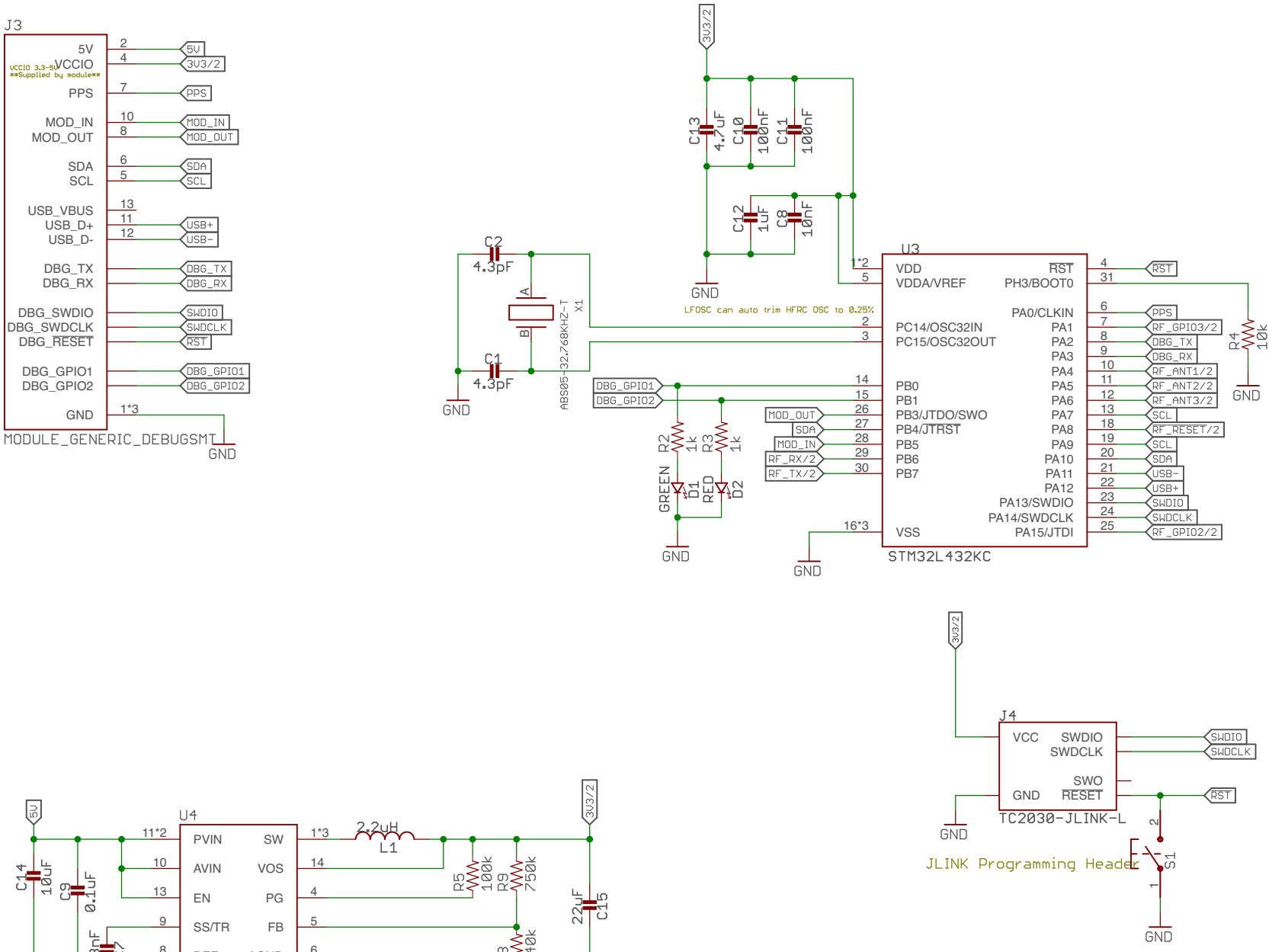
J3
5V
VCCIO
VCCIO 3.3-5V
Supplied by module
PPS
MOD_IN
MOD_OUT
SDA
SCL
USB_VBUS
USB_D+
USB_D-
DBG_TX
DBG_RX
DBG_SWDIO
DBG_SWDCLK
DBG_RESET
DBG_GPIO1
DBG_GPIO2
GND
MODULE_GENERIC_DEBUGSMT
3V3/2
C13 4.7uF
C10 100nF
C11 100nF
C12 1uF
C8 10nF
C2 4.3pF
C1 4.3pF
ABS05-32.768KHZ-T
X1
LFOSC can auto trim HFRC OSC to 0.25%
U3
VDD
VDDA/VREF
PC14/OSC32IN
PC15/OSC32OUT
PB0
PB1
PB3/JTDO/SWO
PB4/JTRST
PB5
PB6
PB7
VSS
RST
PH3/BOOT0
PA0/CLKIN
PA1
PA2
PA3
PA4
PA5
PA6
PA7
PA8
PA9
PA10
PA11
PA12
PA13/SWDIO
PA14/SWDCLK
PA15/JTDI
STM32L432KC
R2 1k
R3 1k
GREEN
RED
D1
D2
R4 10k
RF_GPIO3/2
RF_GPIO2/2
RF_ANT1/2
RF_ANT2/2
RF_ANT3/2
RF_RESET/2
RF_RX/2
RF_TX/2
U4
PVIN
AVIN
EN
SS/TR
DEF
FSW
SW
VOS
PG
FB
AGND
PGND
TLV62130
2.2uH
L1
R5 100k
R9 750k
R8 240k
C14 10uF
C9 0.1uF
C7 3.3nF
22uF
C15
J4
VCC
SWDIO
SWDCLK
GND
SWO
RESET
TC2030-JLINK-L
JLINK Programming Header
S1
RF Spectrum Module
REV: A
Author: Joshua Adkins
Date: 5/20/17 3:34 PM
Sheet: 1/2

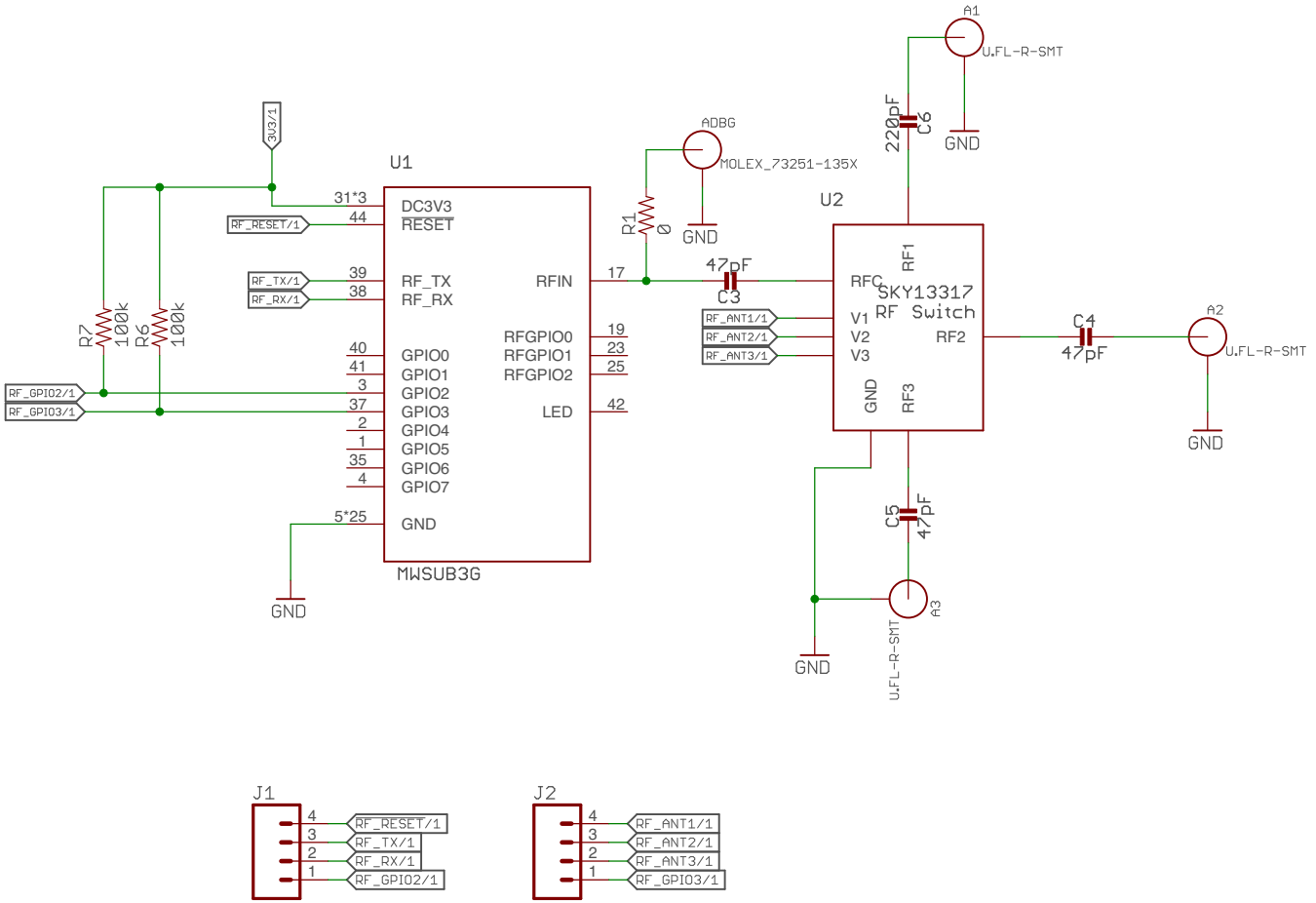

RF Spectrum Module	REV: A
Author: Joshua Adkins	
Date: 5/20/17 3:34 PM	Sheet: 2/2

Top and Bottom Layers

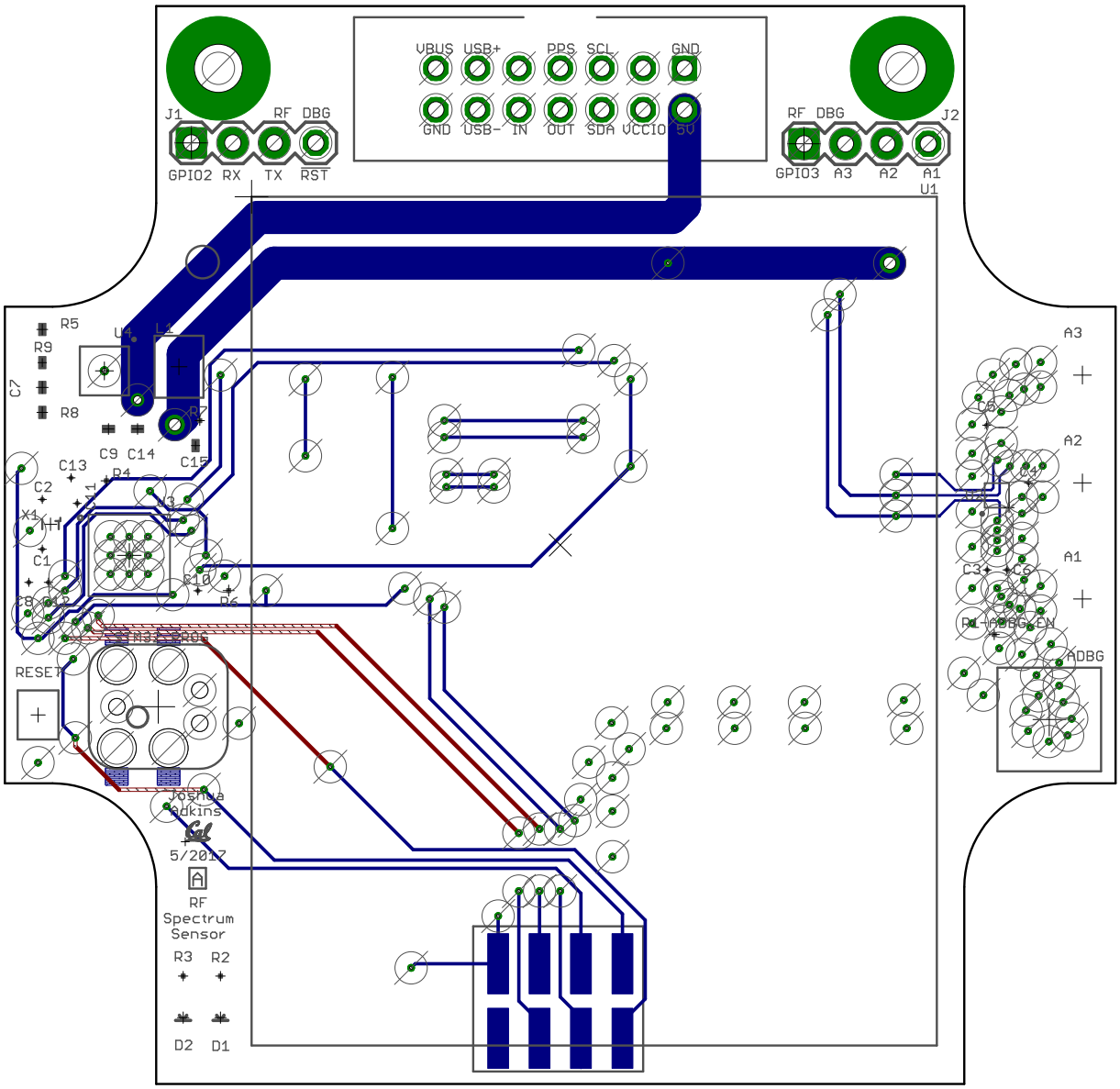

Top Layer

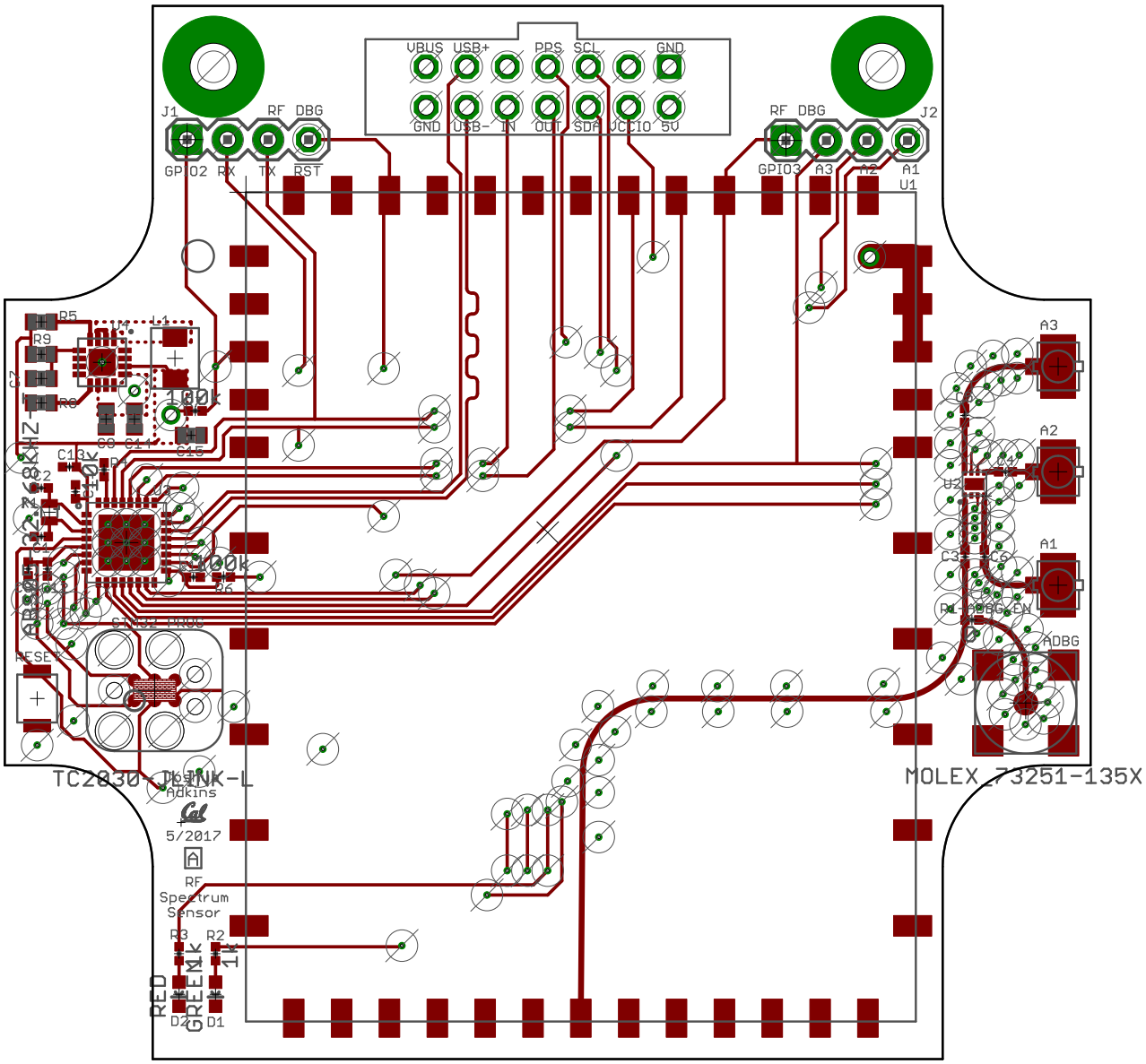
VBUS USB+ PPS SCL GND
GND USB- IN OUT SDA VCCIO 5V
J1
RF DBG
GPIO2 RX TX RST
RF DBG
J2
GPIO3 A3 A2 A1
U1
A3
A2
A1
ADBG
TC2030-JLINK-L
MOLEX_73251-135X
5/2017
RF
Spectrum
Sensor
R3 R2
RED
GREEN
D2 D1

Bottom Layer

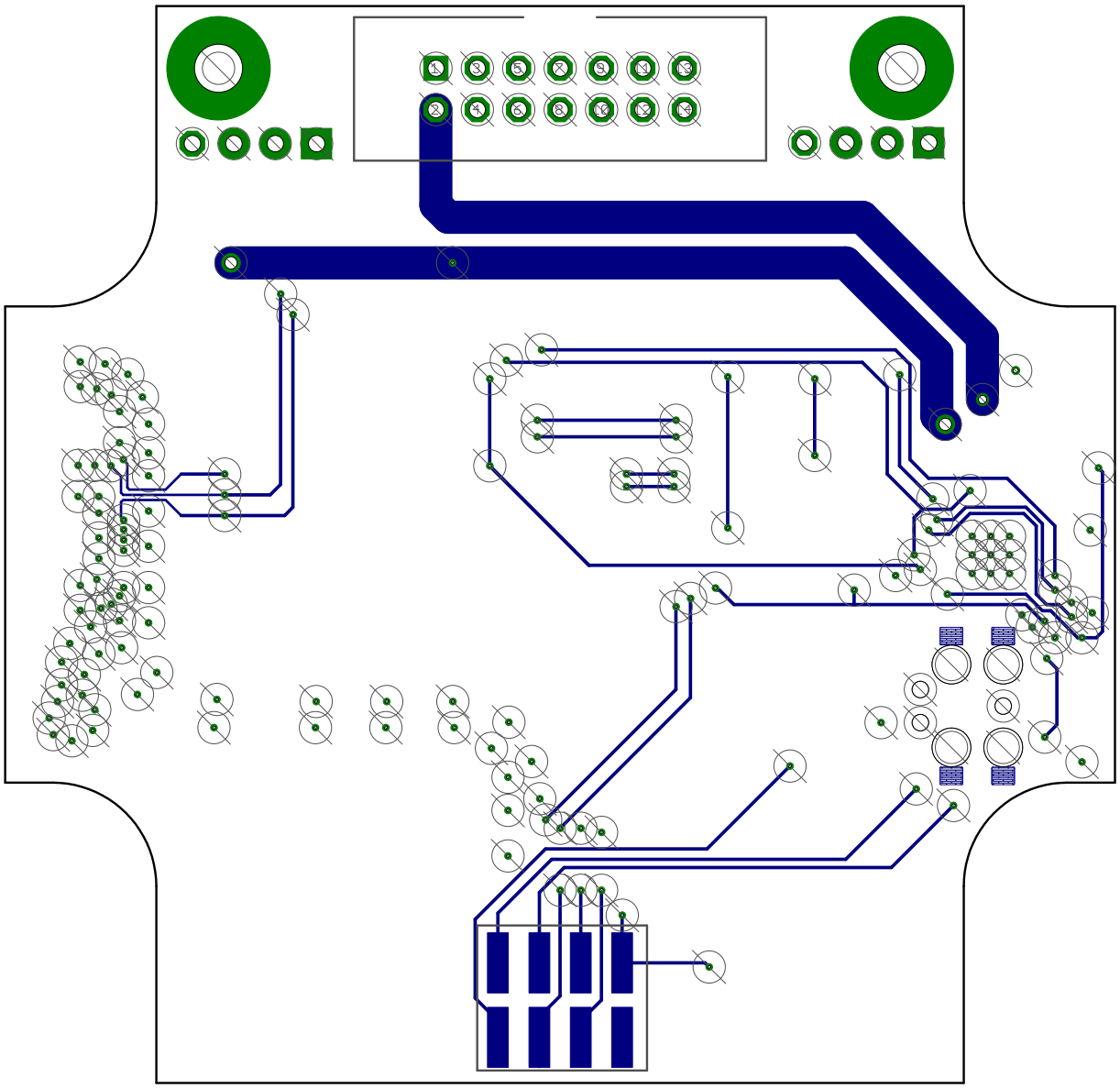

Top Copper Layer

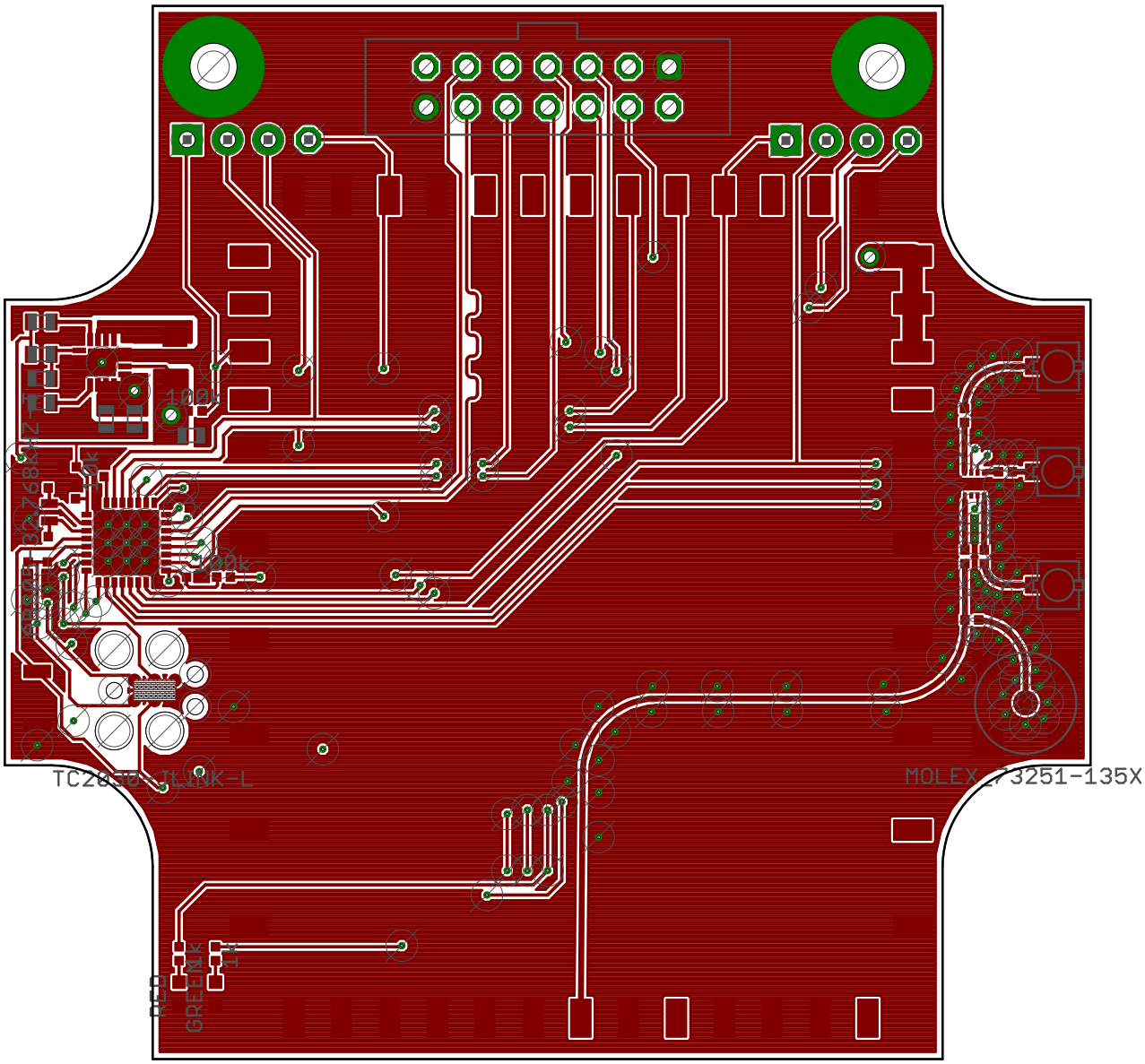

Layer 2 Copper

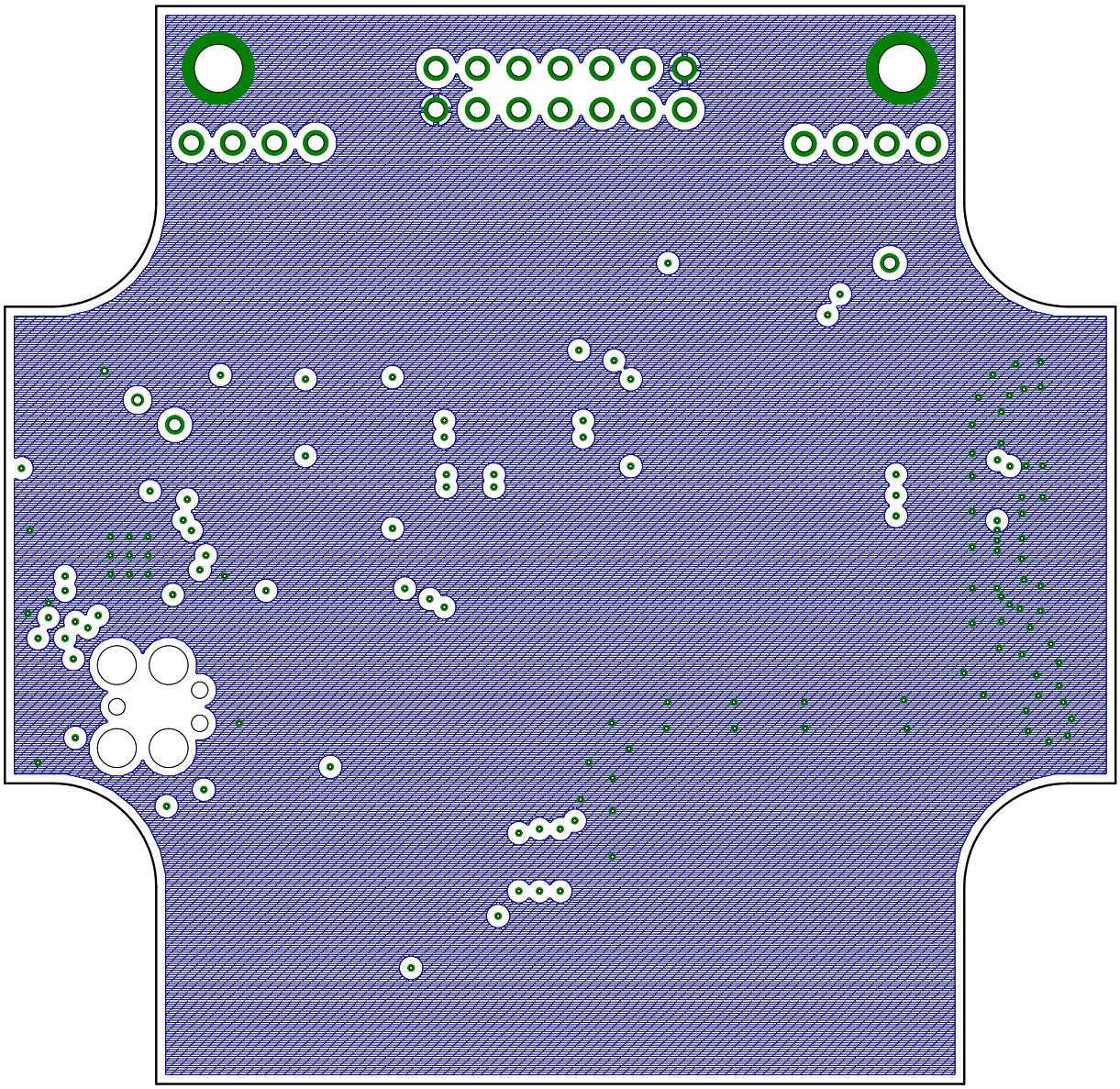

Layer 3 Copper

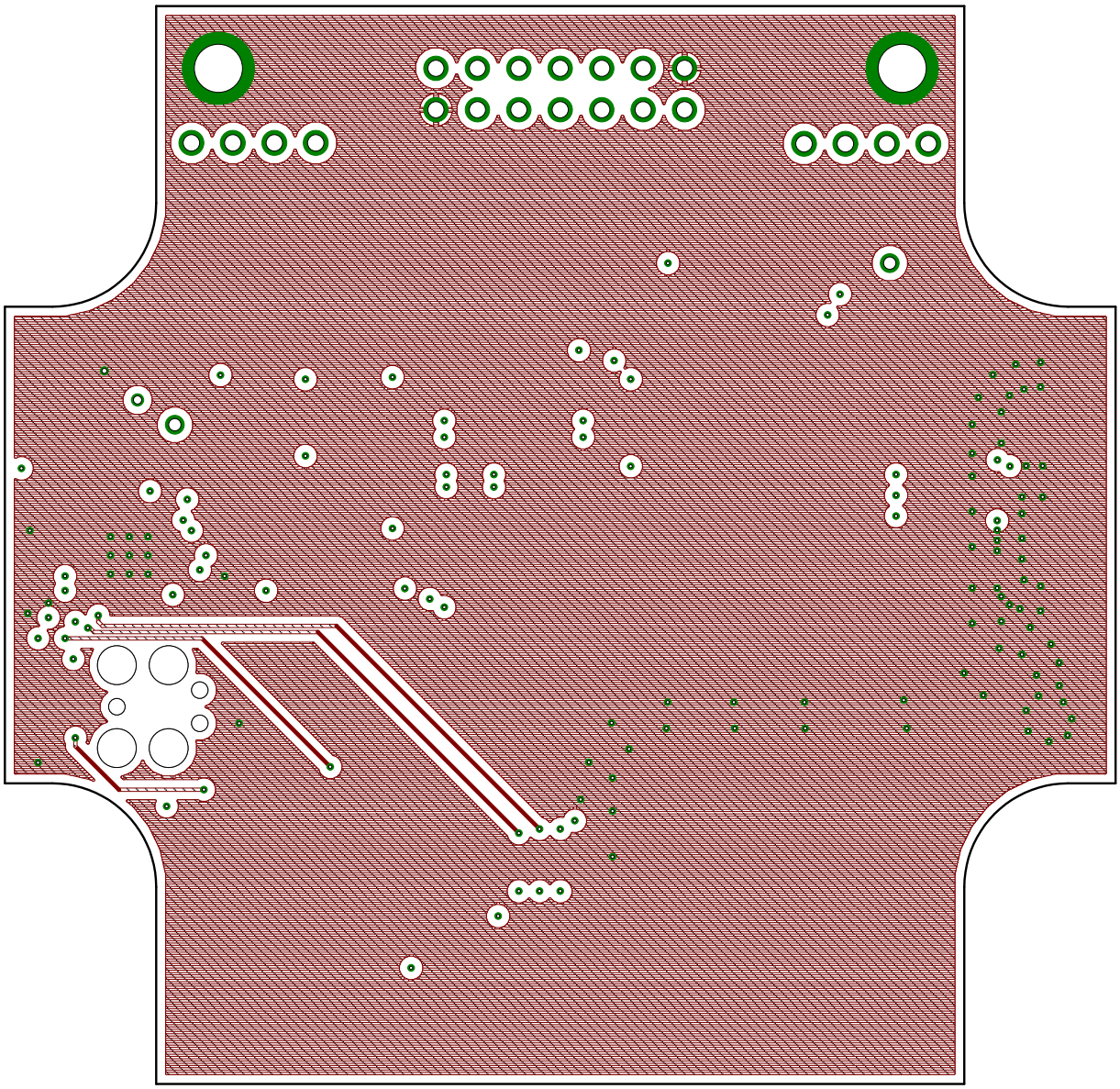

Bottom Copper Layer

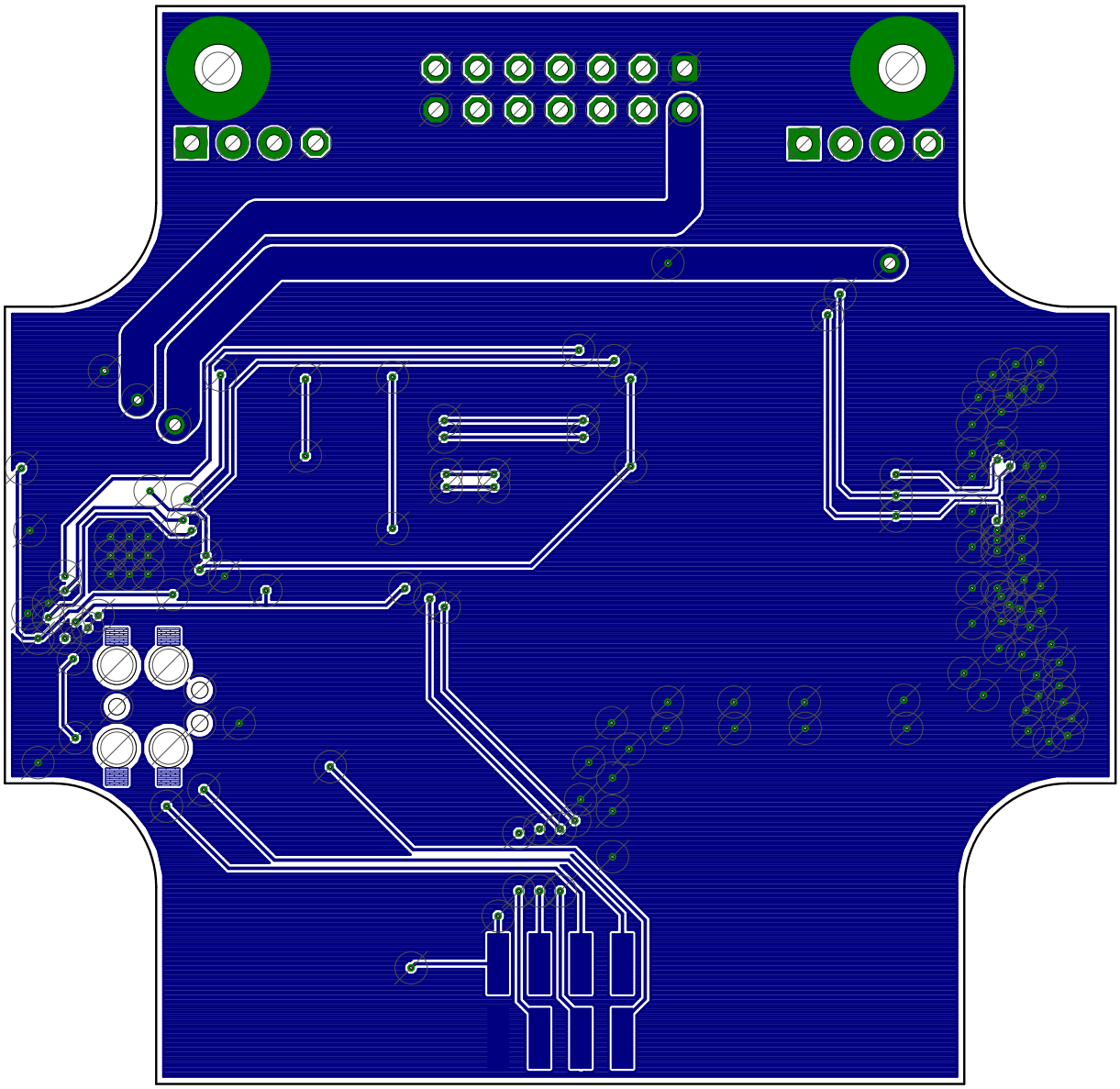

Top Paste Layer with Silkscreen

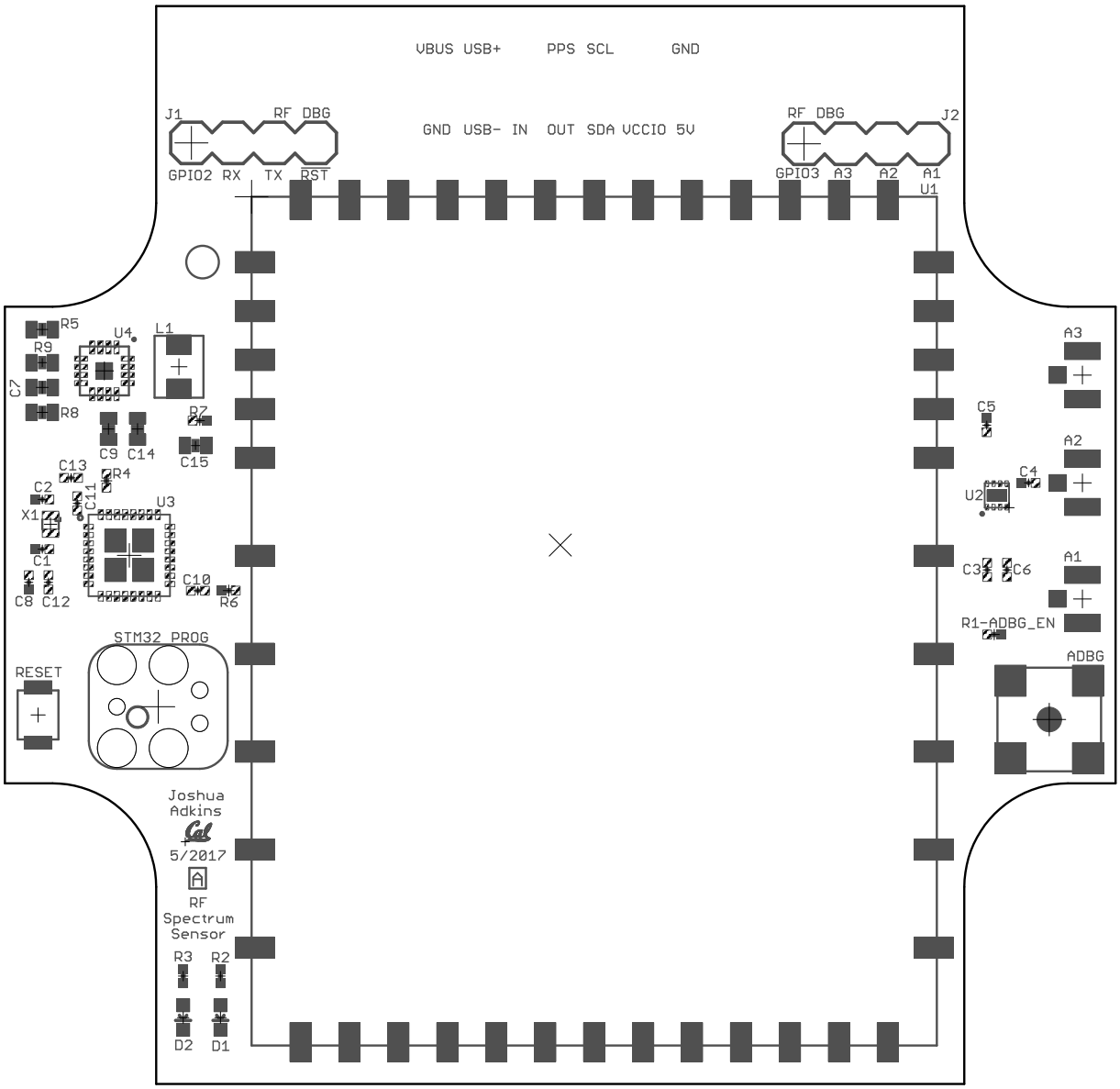

Bottom Paste Layer with Silkscreen

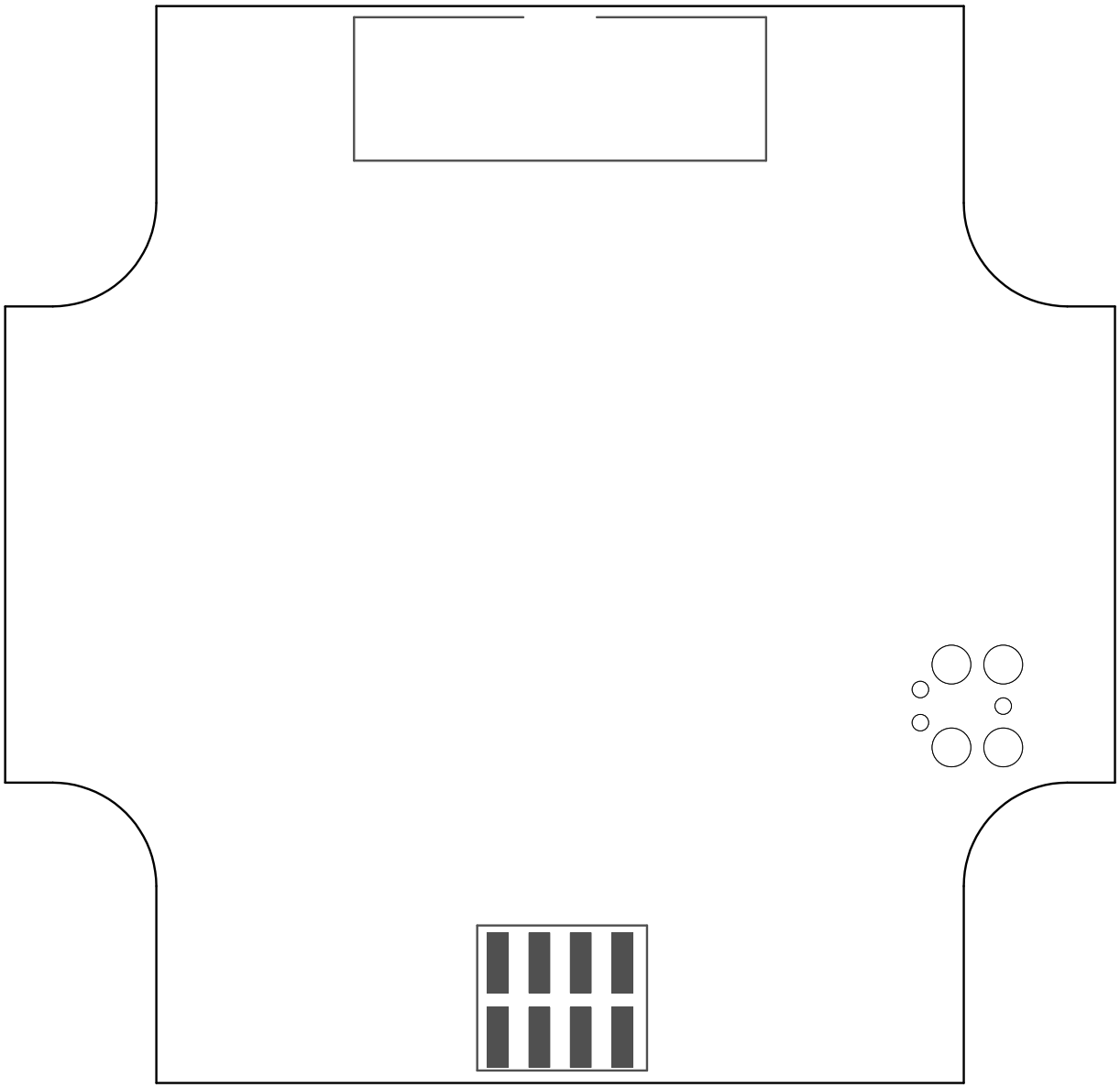

Top and Bottom Layers 1:1 Scale

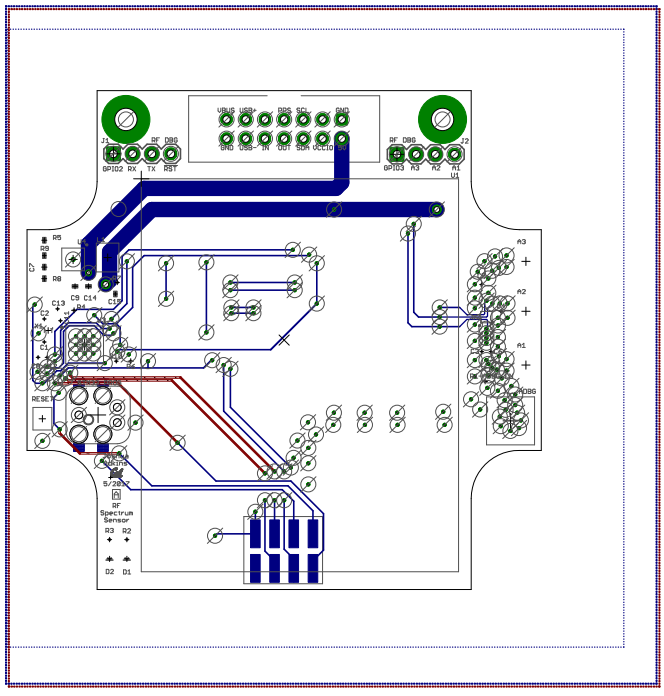

Top Layer 1:1 Scale

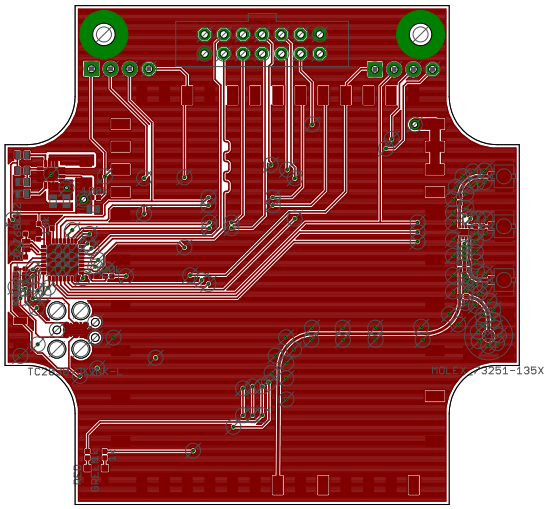

Layer 2 Copper 1:1 Scale

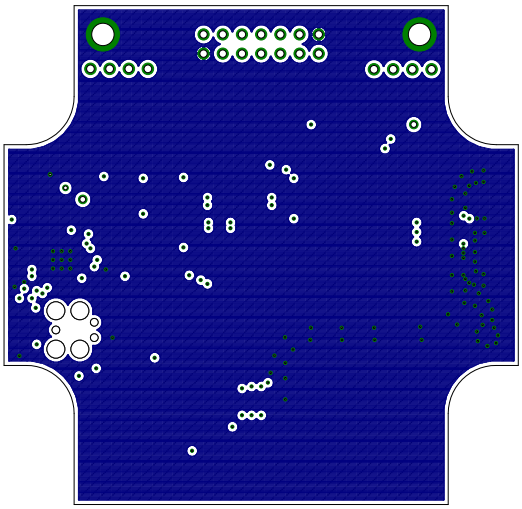

Layer 3 Copper 1:1 Scale

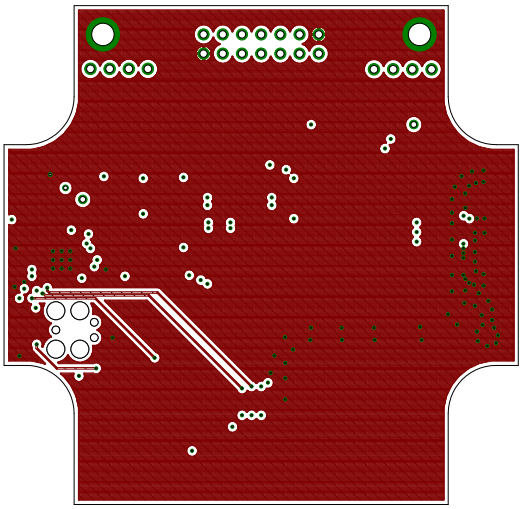
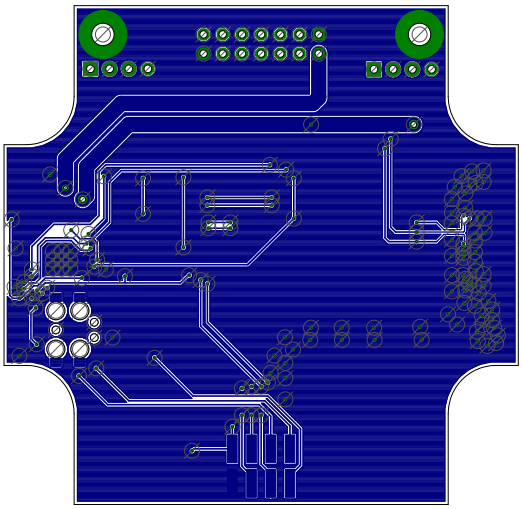
Bottom Copper Layer 1:1 Scale