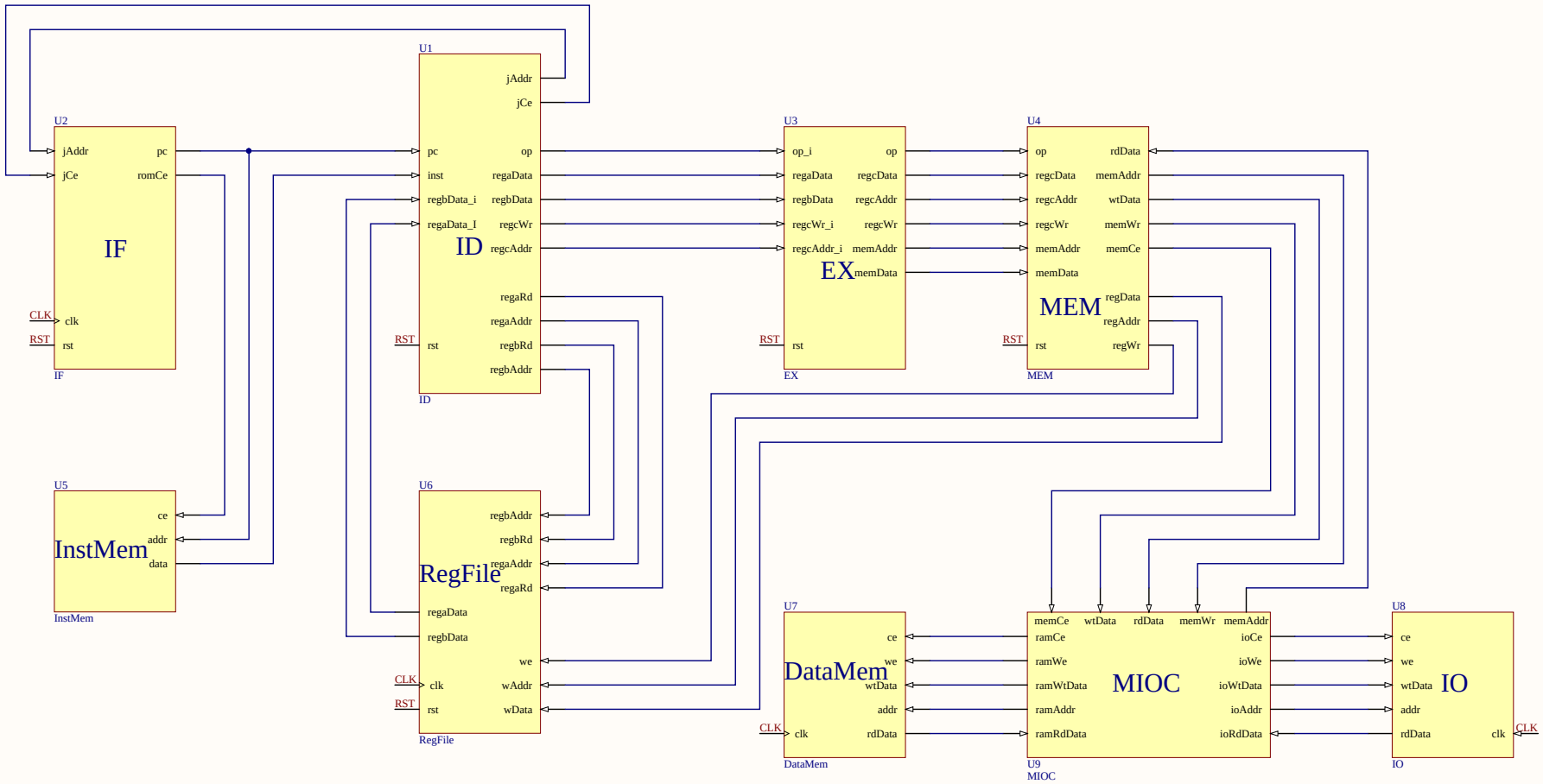
U1
jAddr
jCe
U2
jAddr
jCe
pc
romCe
IF
CLK
clk
RST
rst
IF
pc
inst
regbData_i
regaData_I
op
regaData
regbData
regcWr
regcAddr
ID
regaRd
regaAddr
regbRd
regbAddr
RST
rst
ID
U3
op_i
regaData
regbData
regcWr_i
regcAddr_i
op
regcData
regcAddr
regcWr
memAddr
memData
EX
RST
rst
EX
U4
op
regcData
regcAddr
regcWr
memAddr
memData
rdData
memAddr
wtData
memWr
memCe
MEM
regData
regAddr
regWr
RST
rst
MEM
U5
ce
addr
data
InstMem
InstMem
U6
regbAddr
regbRd
regaAddr
regaRd
RegFile
regaData
regbData
we
CLK
clk
wAddr
RST
rst
wData
RegFile
U7
ce
we
wtData
addr
rdData
DataMem
CLK
clk
DataMem
memCe
wtData
rdData
memWr
memAddr
ramCe
ramWe
ramWtData
ramAddr
ramRdData
MIOC
ioCe
ioWe
ioWtData
ioAddr
ioRdData
U9
MIOC
U8
ce
we
wtData
addr
rdData
IO
clk
CLK
IO

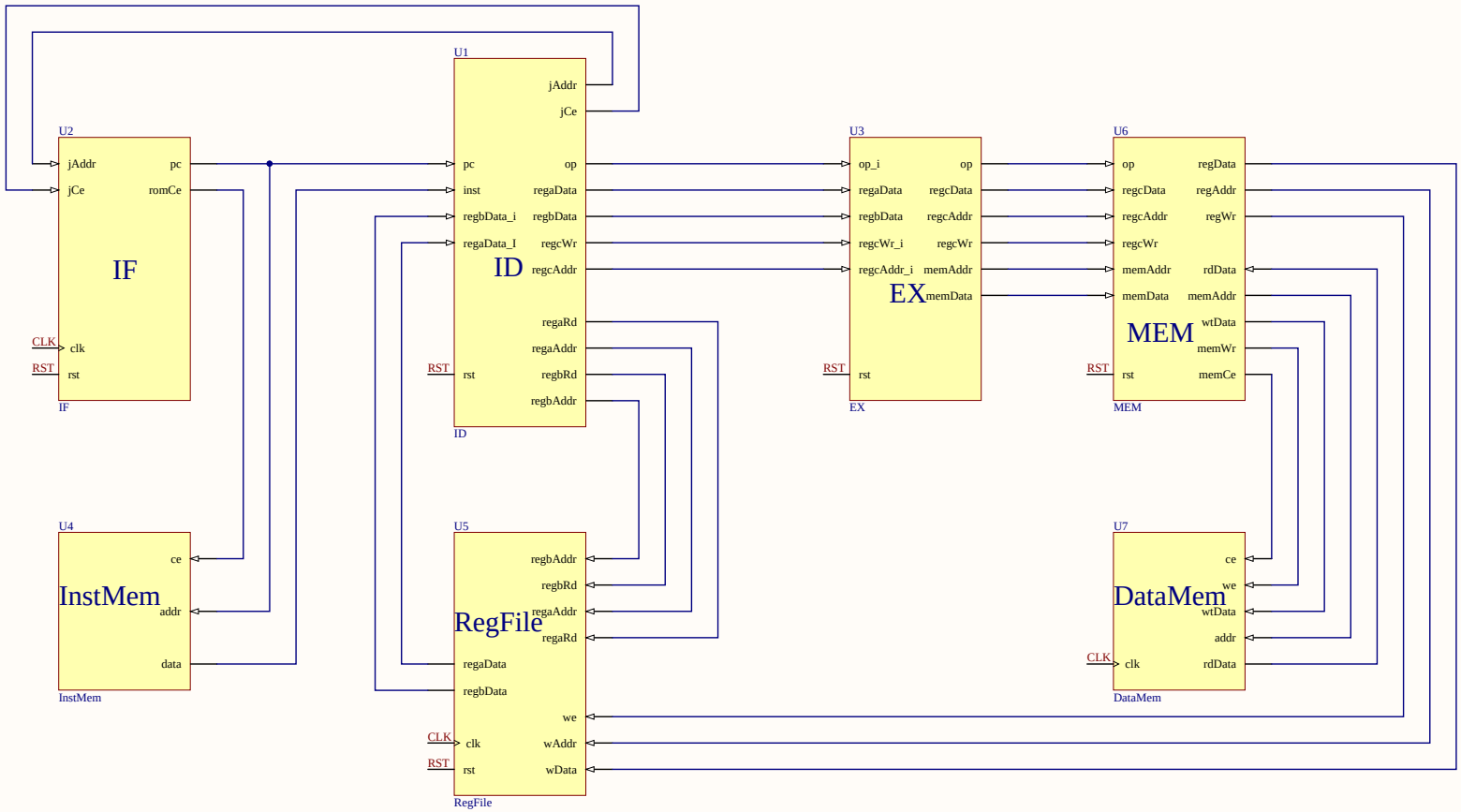
U1
jAddr
jCe
pc
inst
regbData_i
regaData_I
rst
op
regaData
regbData
regcWr
regcAddr
regaRd
regaAddr
regbRd
regbAddr
ID
U2
jAddr
jCe
pc
romCe
IF
CLK
clk
RST
rst
IF
U3
op_i
regaData
regbData
regcWr_i
regcAddr_i
op
regcData
regcAddr
regcWr
memAddr
memData
EX
RST
rst
EX
U6
op
regcData
regcAddr
regcWr
memAddr
memData
regData
regAddr
regWr
rdData
memAddr
wtData
memWr
memCe
MEM
RST
rst
MEM
U4
ce
addr
data
InstMem
InstMem
U5
regbAddr
regbRd
regaAddr
regaRd
regaData
regbData
we
wAddr
wData
RegFile
CLK
clk
RST
rst
RegFile
U7
ce
we
wtData
addr
rdData
DataMem
CLK
clk
DataMem

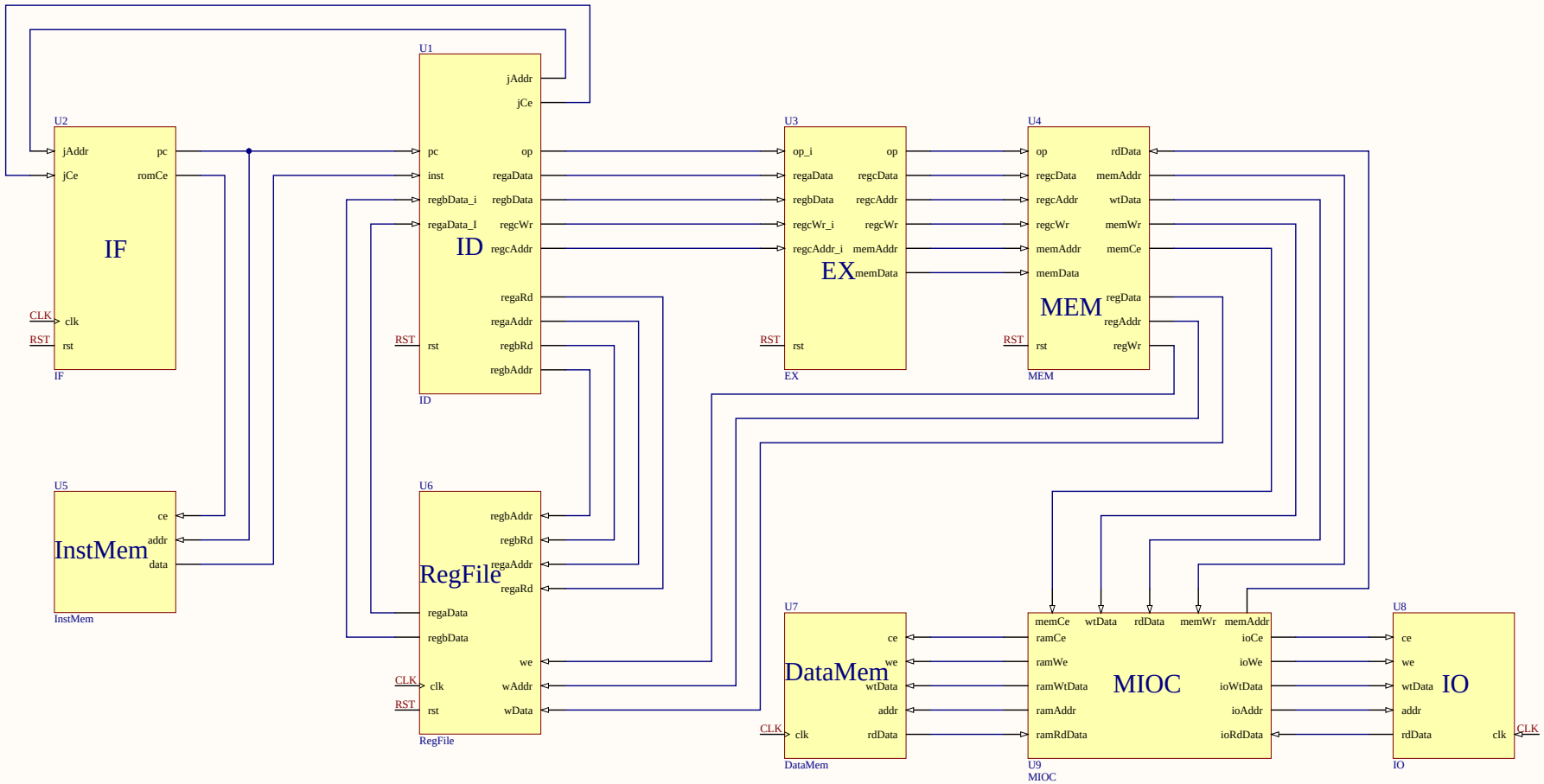

Title		
Size A3	Number	Revision
Date: 2021/4/28	Sheet	of
File: E:\PCB\MIPS\原理图\标准MIPS(mem,IO).SchDoc	Drawn By:	

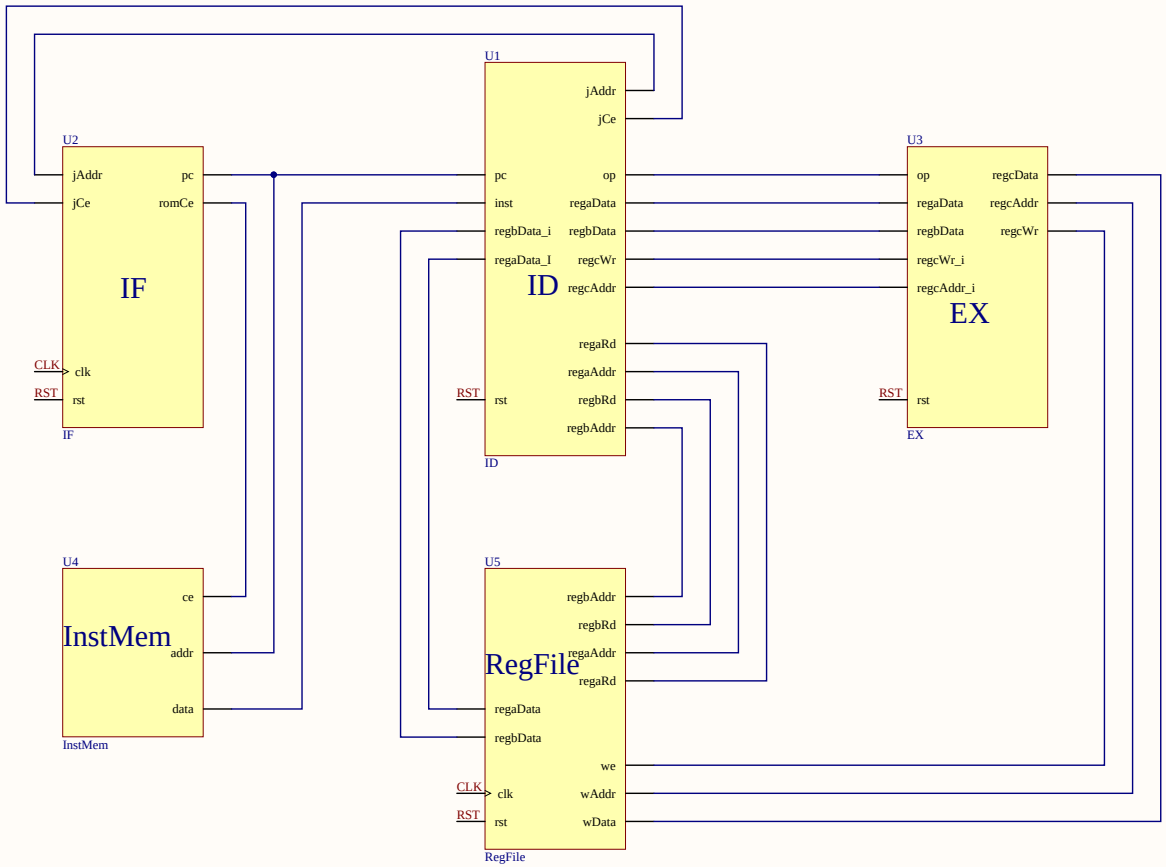
U1
jAddr
jCe
pc
inst
regbData_i
regaData_I
op
regaData
regbData
regcWr
regcAddr
regaRd
regaAddr
regbRd
regbAddr
ID
RST
rst
U2
jAddr
jCe
pc
romCe
IF
CLK
clk
RST
rst
IF
U3
op
regaData
regbData
regcWr_i
regcAddr_i
regcData
regcAddr
regcWr
EX
RST
rst
EX
U4
ce
InstMem
addr
data
InstMem
U5
regbAddr
regbRd
regaAddr
regaRd
RegFile
regaData
regbData
we
CLK
clk
wAddr
RST
rst
wData
RegFile

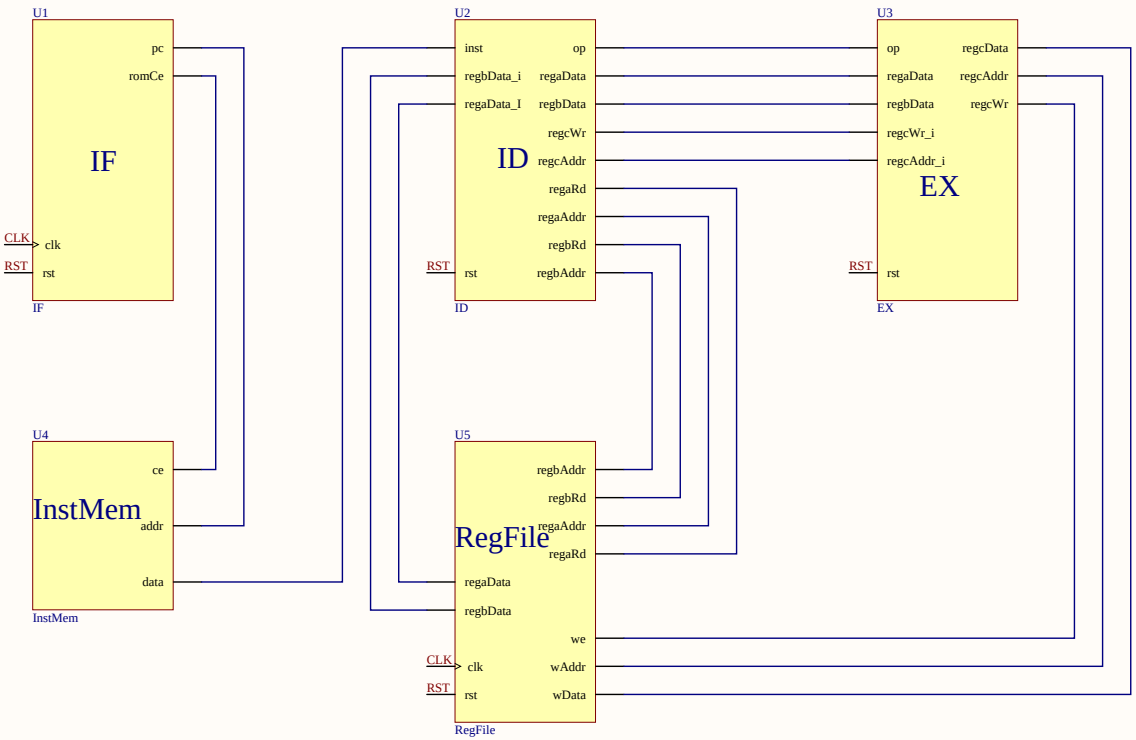
U1
IF
pc
romCe
CLK
clk
RST
rst
IF
U2
ID
inst
regbData_i
regaData_I
rst
op
regaData
regbData
regcWr
regcAddr
regaRd
regaAddr
regbRd
regbAddr
RST
ID
U3
EX
op
regaData
regbData
regcWr_i
regcAddr_i
rst
regcData
regcAddr
regcWr
RST
EX
U4
InstMem
ce
addr
data
InstMem
U5
RegFile
regbAddr
regbRd
regaAddr
regaRd
regaData
regbData
we
wAddr
wData
CLK
clk
RST
rst
RegFile