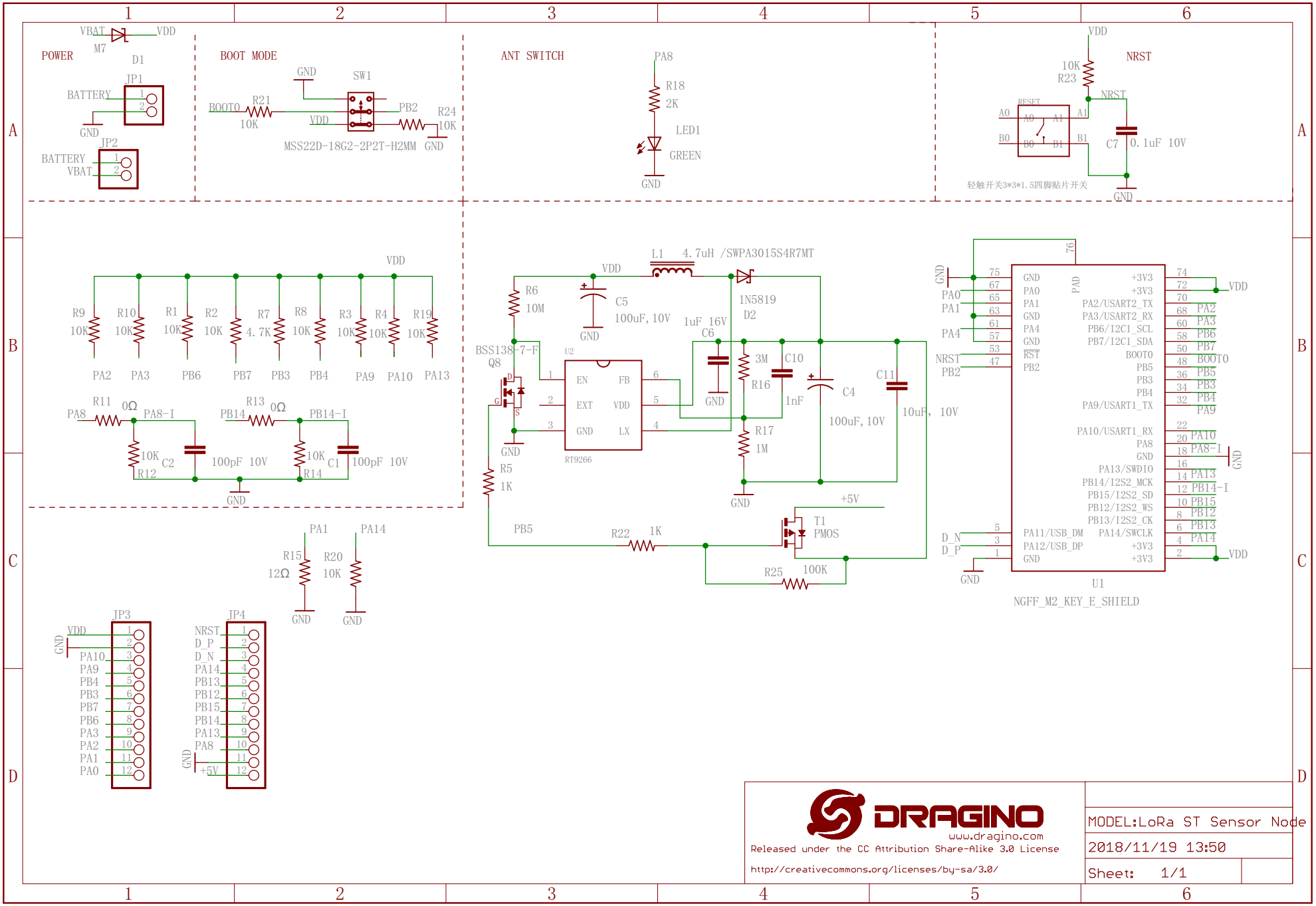
POWER
VBAT
VDD
M7
D1
JP1
BATTERY
GND
JP2
BATTERY
VBAT
BOOT MODE
GND
SW1
BOOT0
R21
10K
VDD
PB2
R24
10K
MSS22D-18G2-2P2T-H2MM
GND
ANT SWITCH
PA8
R18
2K
LED1
GREEN
GND
VDD
NRST
10K
R23
NRST
RESET
A0
A1
B0
B1
C7
0.1uF 10V
轻触开关3*3*1.5四脚贴片开关
GND
VDD
R9 10K
R10 10K
R1 10K
R2 10K
R7 4.7K
R8 10K
R3 10K
R4 10K
R19 10K
PA2
PA3
PB6
PB7
PB3
PB4
PA9
PA10
PA13
R11 0Ω
PA8
PA8-I
R12 10K
C2 100pF 10V
GND
R13 0Ω
PB14
PB14-I
R14 10K
C1 100pF 10V
GND
L1 4.7uH /SWPA3015S4R7MT
VDD
R6 10M
C5 100uF, 10V
GND
1uF 16V
C6
1N5819
D2
BSS138-7-F
Q8
U2
EN
FB
EXT
VDD
GND
LX
RT9266
GND
R5 1K
3M
R16
C10
1nF
C4 100uF, 10V
C11 10uF, 10V
R17 1M
GND
+5V
T1
PMOS
PB5
R22 1K
R25 100K
PA1
PA14
R15 12Ω
R20 10K
GND
GND
JP3
VDD
PA10
PA9
PB4
PB3
PB7
PB6
PA3
PA2
PA1
PA0
JP4
NRST
D_P
D_N
PA14
PB13
PB12
PB15
PB14
PA13
PA8
+5V
GND
76
PAD
GND
PA0
PA1
PA4
NRST
PB2
D_N
D_P
GND
+3V3
PA2/USART2_TX
PA3/USART2_RX
PB6/I2C1_SCL
PB7/I2C1_SDA
BOOT0
PB5
PB3
PB4
PA9/USART1_TX
PA10/USART1_RX
PA8
PA13/SWDIO
PB14/I2S2_MCK
PB15/I2S2_SD
PB12/I2S2_WS
PB13/I2S2_CK
PA11/USB_DM
PA12/USB_DP
PA14/SWCLK
U1
NGFF_M2_KEY_E_SHIELD
DRAGINO
www.dragino.com
Released under the CC Attribution Share-Alike 3.0 License
http://creativecommons.org/licenses/by-sa/3.0/
MODEL:LoRa ST Sensor Node v1.3
2018/11/19 13:50
Sheet: 1/1