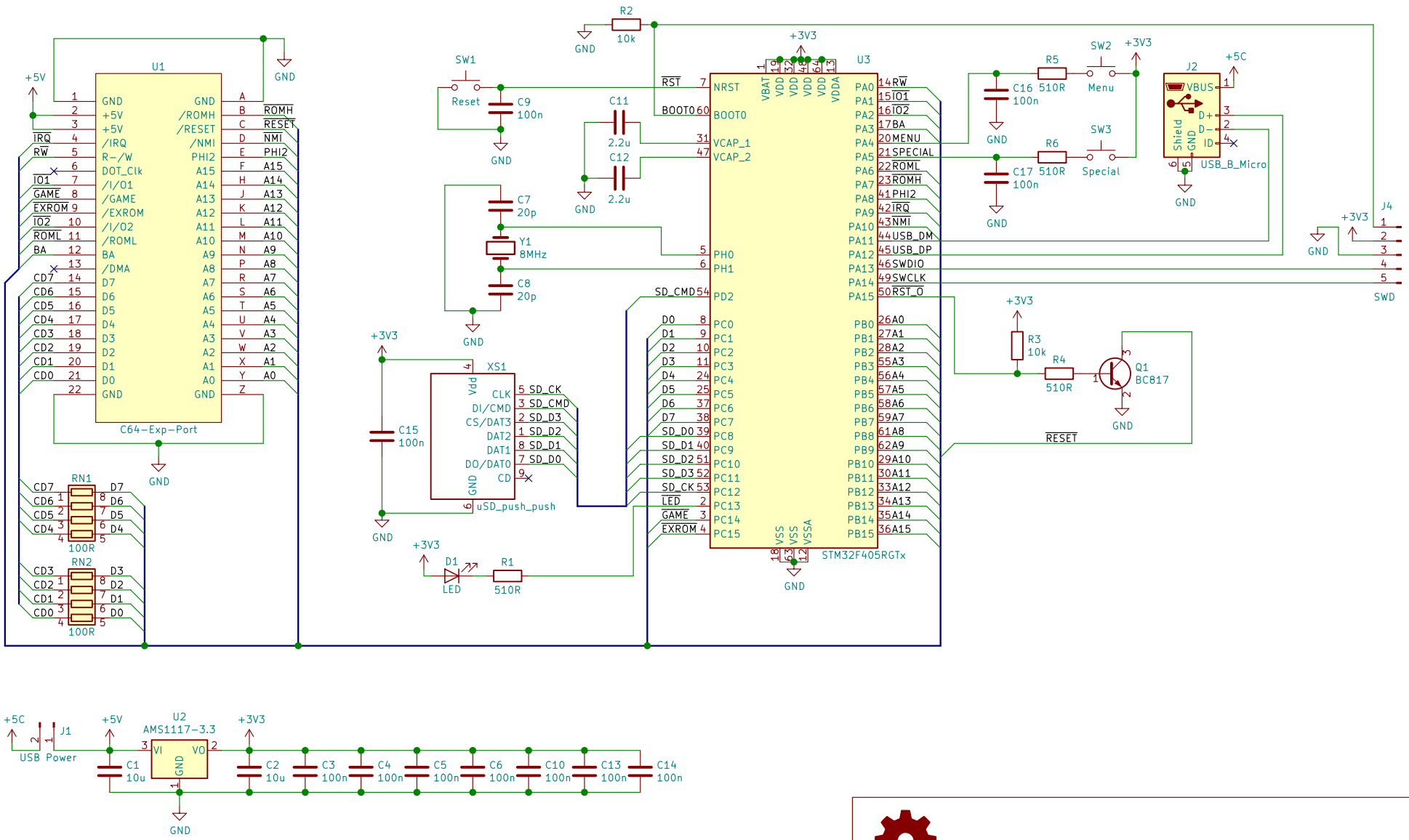

open hardware

Sheet: /

File: KungFuFlash.sch

Title: Kung Fu Flash

Size: A4	Date: 2019-12-14	Rev: 1
KiCad E.D.A. kicad 5.1.4+dfsg1-1		Id: 1/1