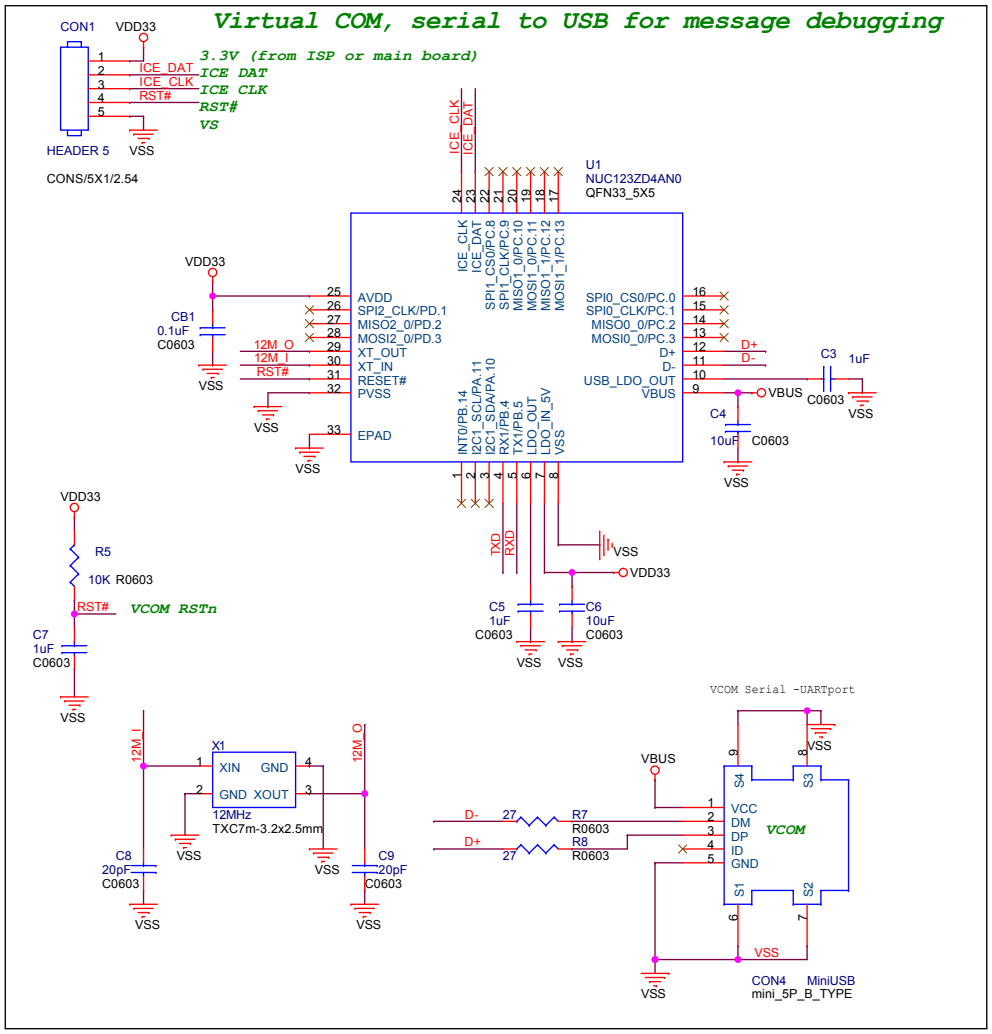

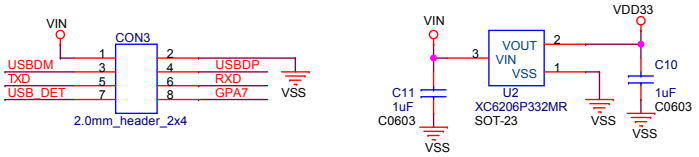

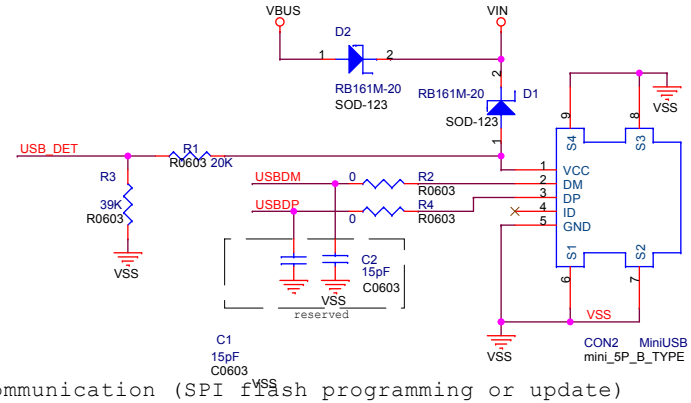

PC communication (SPI flash programming or update)

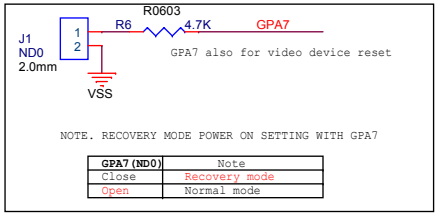

GPA7 (ND0)	Note
Close	Recovery mode
Open	Normal mode