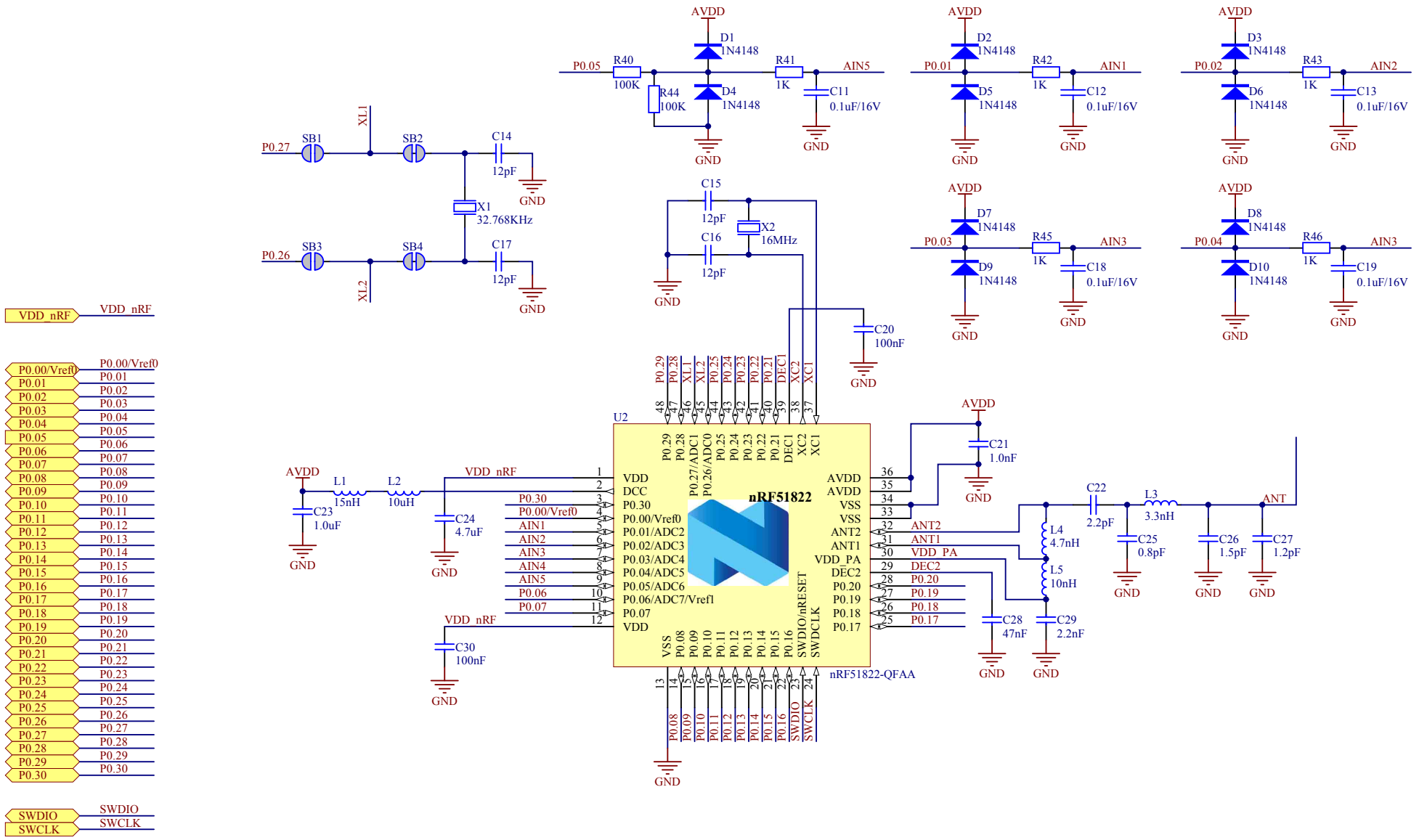
AVDD
D1 1N4148
D4 1N4148
P0.05
R40 100K
R44 100K
R41 1K
AIN5
C11 0.1uF/16V
GND
D2 1N4148
D5 1N4148
P0.01
R42 1K
AIN1
C12 0.1uF/16V
D3 1N4148
D6 1N4148
P0.02
R43 1K
AIN2
C13 0.1uF/16V
D7 1N4148
D9 1N4148
P0.03
R45 1K
AIN3
C18 0.1uF/16V
D8 1N4148
D10 1N4148
P0.04
R46 1K
AIN3
C19 0.1uF/16V
P0.27
SB1
XL1
SB2
C14 12pF
X1 32.768KHz
P0.26
SB3
XL2
SB4
C17 12pF
C15 12pF
C16 12pF
X2 16MHz
C20 100nF
VDD_nRF
P0.00/Vref0
P0.01
P0.02
P0.03
P0.04
P0.05
P0.06
P0.07
P0.08
P0.09
P0.10
P0.11
P0.12
P0.13
P0.14
P0.15
P0.16
P0.17
P0.18
P0.19
P0.20
P0.21
P0.22
P0.23
P0.24
P0.25
P0.26
P0.27
P0.28
P0.29
P0.30
SWDIO
SWCLK
U2
nRF51822
nRF51822-QFAA
VDD
DCC
P0.30
P0.00/Vref0
P0.01/ADC2
P0.02/ADC3
P0.03/ADC4
P0.04/ADC5
P0.05/ADC6
P0.06/ADC7/Vref1
P0.07
VDD
P0.27/ADC1
P0.26/ADC0
AVDD
AVDD
VSS
VSS
ANT2
ANT1
VDD_PA
DEC2
P0.20
P0.19
P0.18
P0.17
SWDIO/nRESET
SWDCLK
VSS
P0.08
P0.09
P0.10
P0.11
P0.12
P0.13
P0.14
P0.15
P0.16
AIN1
AIN2
AIN3
AIN4
AIN5
P0.06
P0.07
L1 15nH
L2 10uH
C23 1.0uF
C24 4.7uF
C30 100nF
C21 1.0nF
C22 2.2pF
L3 3.3nH
L4 4.7nH
L5 10nH
C25 0.8pF
C26 1.5pF
C27 1.2pF
C28 47nF
C29 2.2nF
ANT

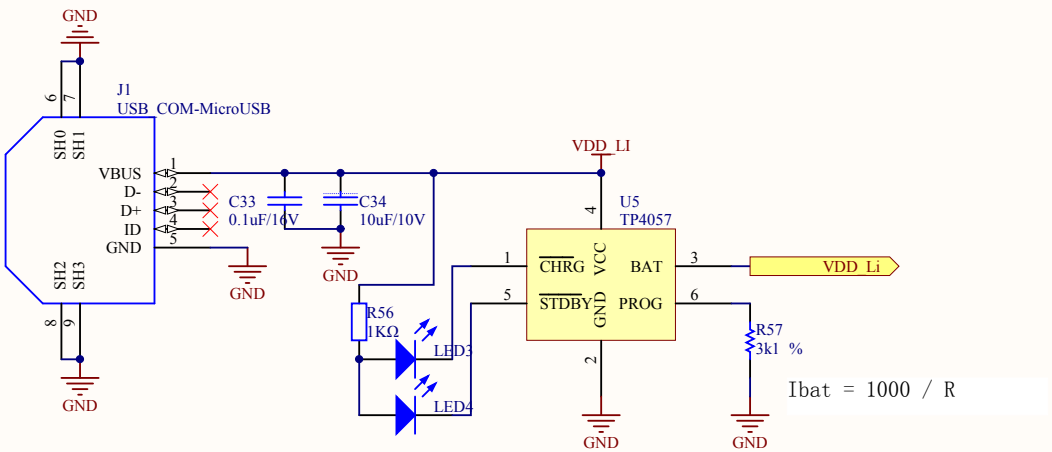

Ibat = 1000 / R

充电状态	CHRG	STDBY
正在充电	ON	OFF
电池充满	OFF	ON
电池反接，电池欠压	OFF	ON

Title		
Size A4	Number	Revision
Date: 2014/6/27		Sheet of
File: E:\ \..\Charge.SchDoc		Drawn By:

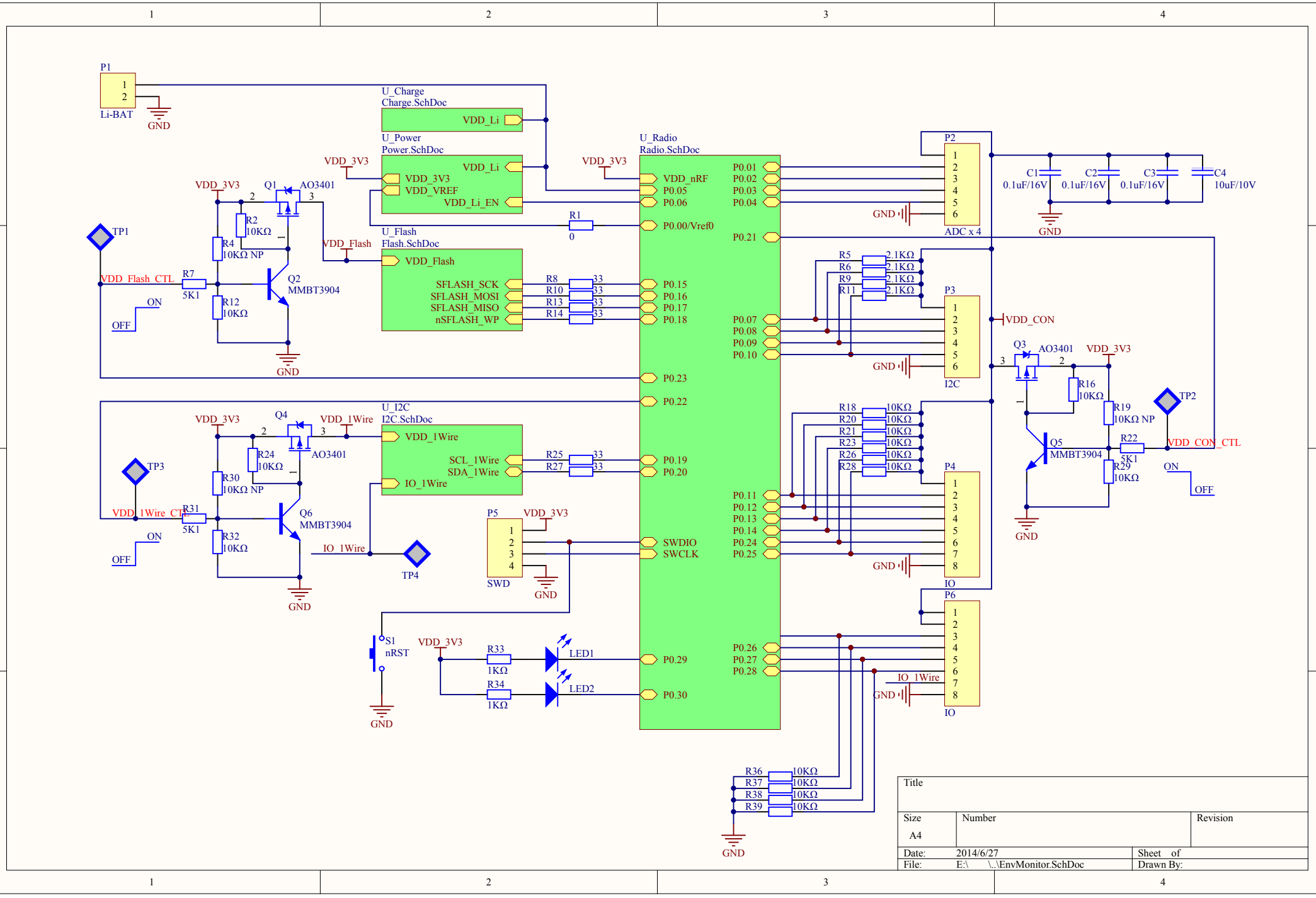

Title		
Size A4	Number	Revision
Date: 2014/6/27		Sheet of
File: E:\ \..\EnvMonitor.SchDoc		Drawn By:

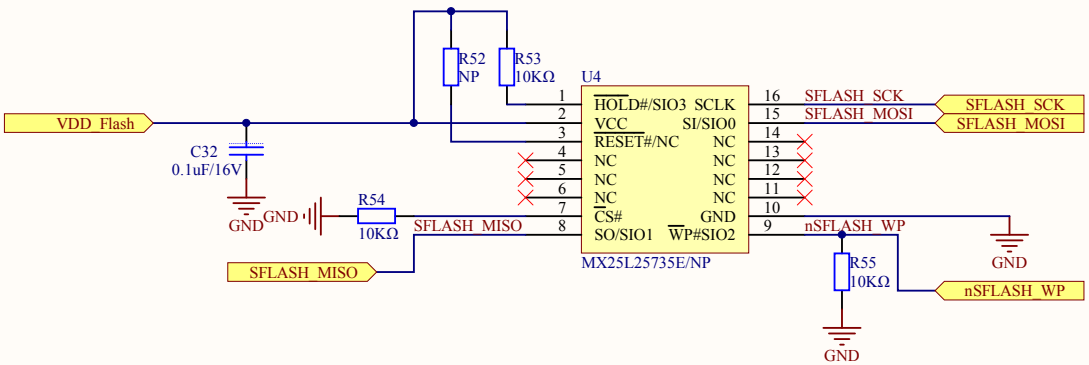
VDD_Flash
C32
0.1uF/16V
GND
GND
R54
10KΩ
SFLASH_MISO
SFLASH_MISO
R52
NP
R53
10KΩ
U4
HOLD#/SIO3
VCC
RESET#/NC
NC
NC
NC
CS#
SO/SIO1
SCLK
SI/SIO0
NC
NC
NC
NC
GND
WP#SIO2
MX25L25735E/NP
1
2
3
4
5
6
7
8
16
15
14
13
12
11
10
9
SFLASH_SCK
SFLASH_MOSI
nSFLASH_WP
SFLASH_SCK
SFLASH_MOSI
GND
R55
10KΩ
nSFLASH_WP
GND

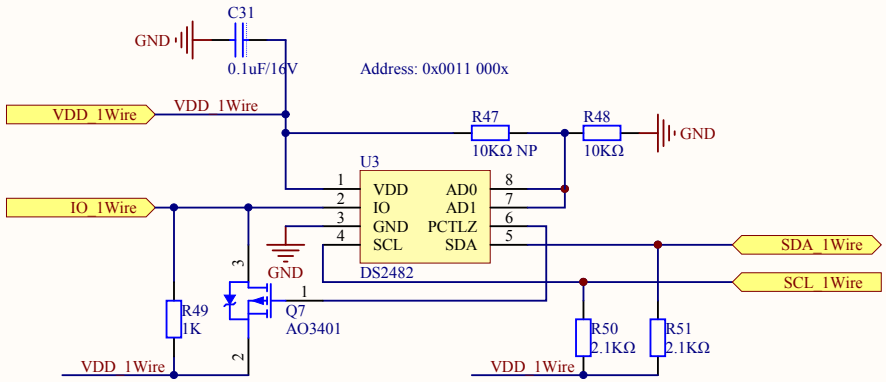
C31
GND
0.1uF/16V
Address: 0x0011 000x
VDD_1Wire
VDD_1Wire
R47
10KΩ NP
R48
10KΩ
GND
U3
VDD
IO
GND
SCL
AD0
AD1
PCTLZ
SDA
DS2482
IO_1Wire
GND
SDA_1Wire
SCL_1Wire
R49
1K
Q7
AO3401
R50
2.1KΩ
R51
2.1KΩ
VDD_1Wire
VDD_1Wire

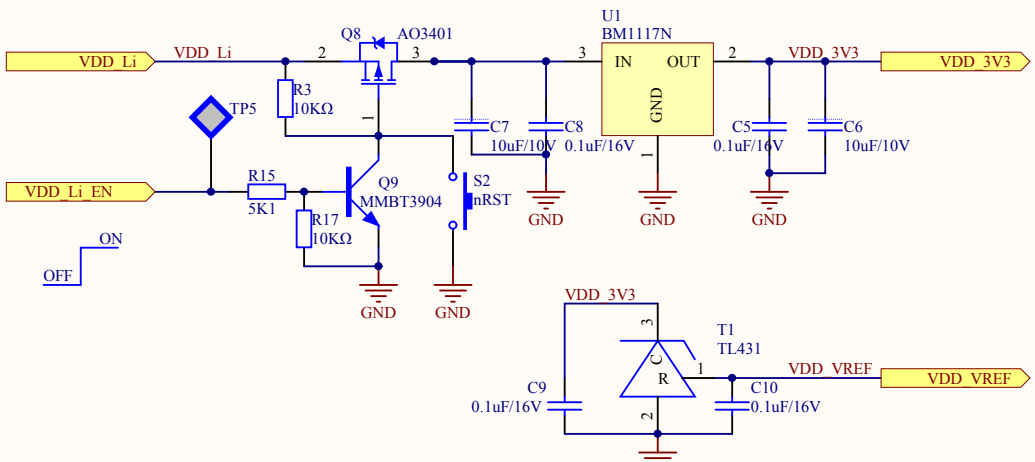
VDD_Li
VDD_Li
Q8
AO3401
U1
BM1117N
IN
OUT
GND
VDD_3V3
VDD_3V3
TP5
R3
10KΩ
C7
10uF/10V
C8
0.1uF/16V
C5
0.1uF/16V
C6
10uF/10V
VDD_Li_EN
R15
5K1
Q9
MMBT3904
S2
nRST
R17
10KΩ
ON
OFF
GND
GND
GND
GND
GND
GND
VDD_3V3
T1
TL431
C
R
VDD_VREF
VDD_VREF
C9
0.1uF/16V
C10
0.1uF/16V