US005170369A

United States Patent [19]

Rossum

[11] Patent Number: 5,170,369

[45] Date of Patent: Dec. 8, 1992

[54] DYNAMIC DIGITAL IIR AUDIO FILTER AND METHOD WHICH PROVIDES DYNAMIC DIGITAL FILTERING FOR AUDIO SIGNALS

[75] Inventor: **David P. Rossum**, Aptos, Calif.

[73] Assignee: **E-mu Systems, Inc.**, Scotts Valley, Calif.

[21] Appl. No.: **576,203**

[22] Filed: **Aug. 29, 1990**

Related U.S. Application Data

[63] Continuation-in-part of Ser. No. 411,450, Sep. 25, 1989, abandoned.

[51] **Int. Cl.**[5] **G06F 15/31**

[52] **U.S. Cl.** **364/724.17**

[58] **Field of Search** 364/724.01, 724.16, 364/724.17, 723, 748.5

[56] **References Cited**

U.S. PATENT DOCUMENTS

4,305,133	12/1981	Amada et al.	364/724.17
4,563,681	1/1986	Godard	364/724.09
4,569,030	2/1986	Butterweck et al.	364/724.17
4,573,135	2/1986	Dieterich	364/724.01
4,736,333	4/1988	Mead et al.	364/736

OTHER PUBLICATIONS

J. Dattorro, "The Implementation of Recursive Digital Filters for High-Fidelity Audio", Journal Audio Engineering Society, vol. 36, No. 11, Nov. 1988, pp. 851-878.

Primary Examiner—Long T. Nguyen

Attorney, Agent, or Firm—Heller, Ehrman, White & McAuliffe

[57] **ABSTRACT**

An improved dynamic digital IIR (Infinite Impulse Response) audio filter and method provides a remedy for the major problems in state of the art digital IIR filtering and dynamic digital filtering for audio. In particular, the required multiplier coefficient size is reduced, such that 16 bit coefficients are adequate for good frequency resolution. In addition, the data size of the multiplier is also reduced, to be similar to the input and output data resolution without inferior noise performance. Furthermore, the structure is easily modified to allow the fixing of the DC (Direct Current) gain of the IIR filter to unity regardless of coefficient choice, eliminating any problems with filter dynamic range at low frequency passbands. Additionally, a dynamic filter structure allows logarithmic filter sweeps and compresses the coefficients further down to as few as 8 bits with adequate resolution for audio throughout the band. The structure allows the alteration of sweep of the filter without excessive computation or the requirement to read the current sweep value.

7 Claims, 11 Drawing Sheets

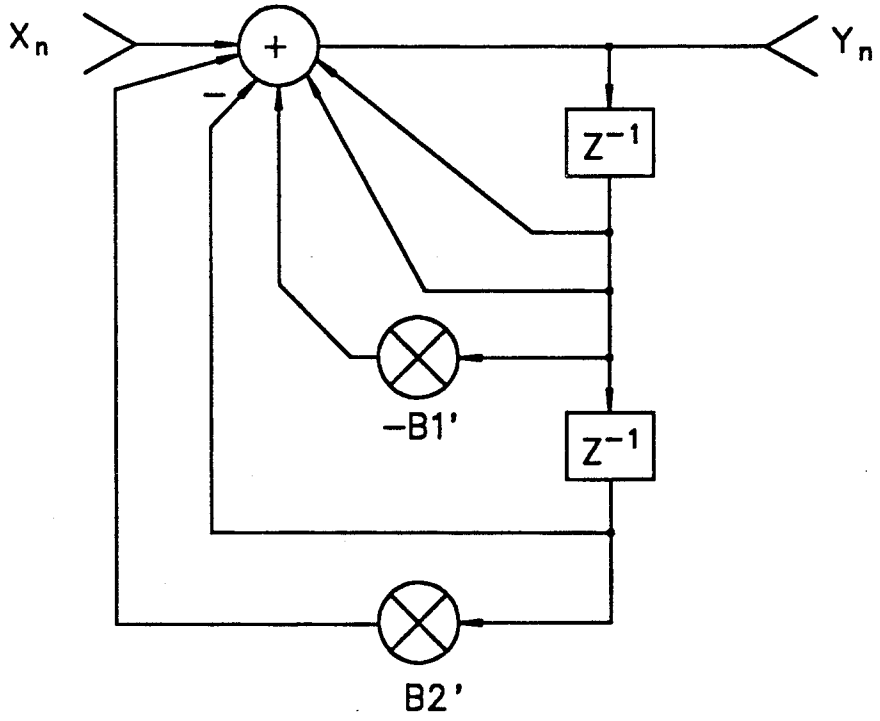

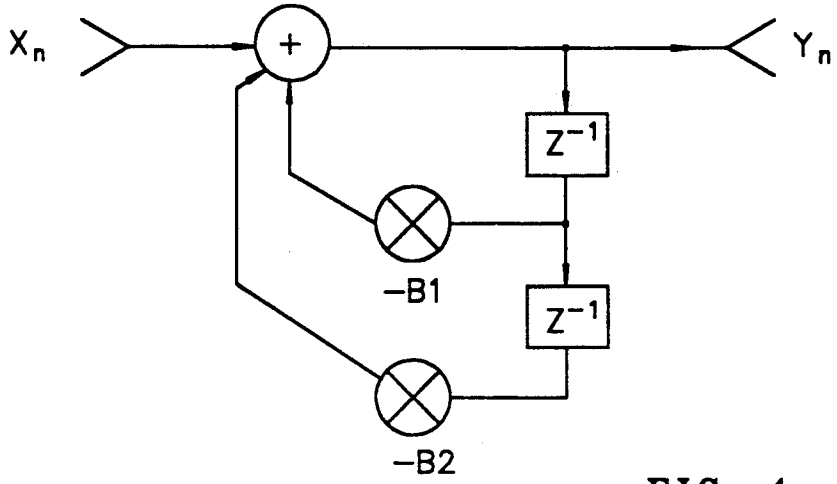

FIG. 1
PRIOR ART

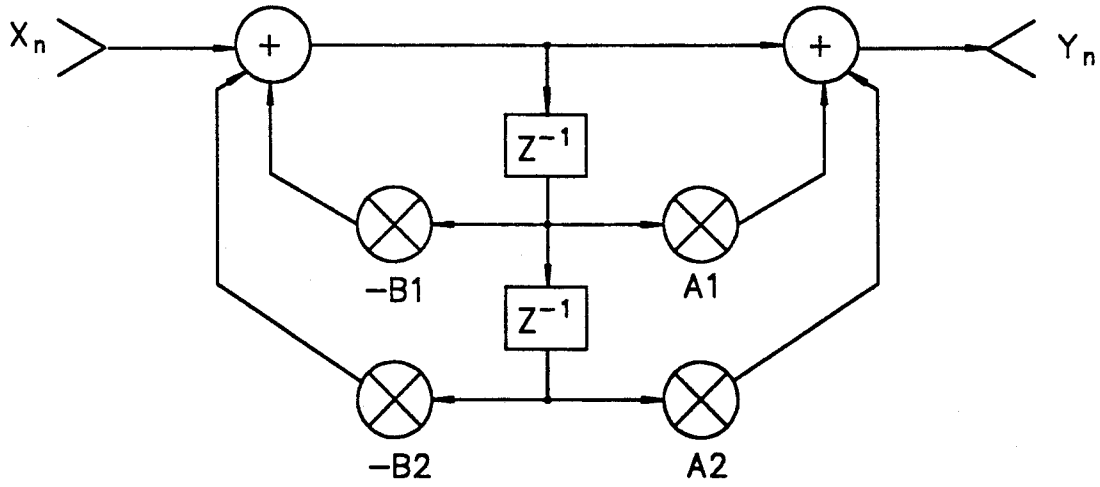

FIG. 2
PRIOR ART

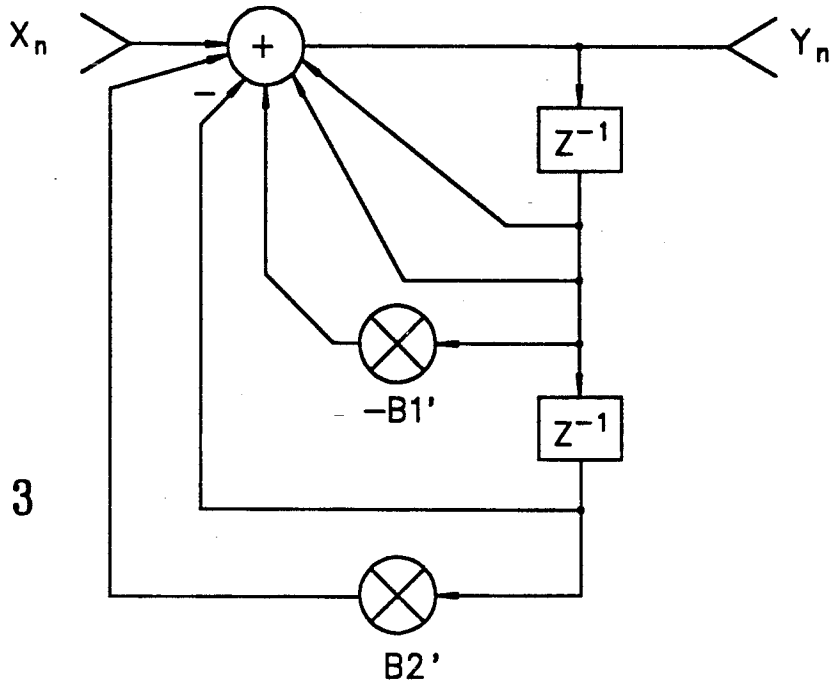

FIG. 3

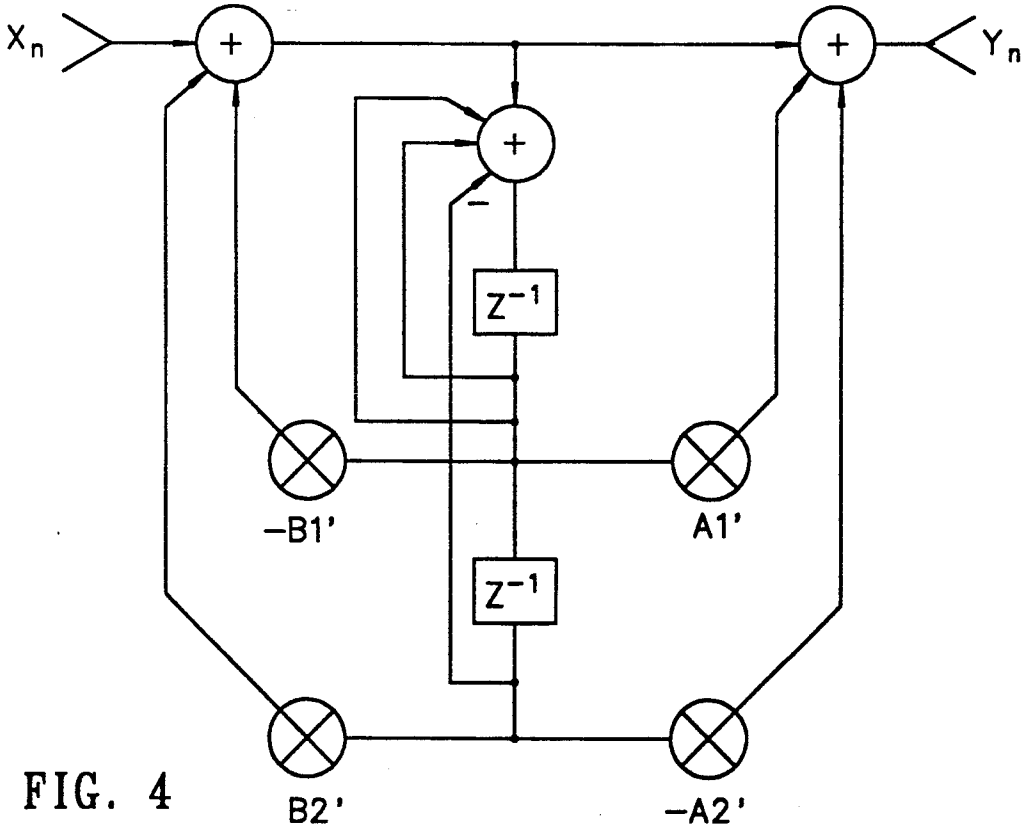

FIG. 4

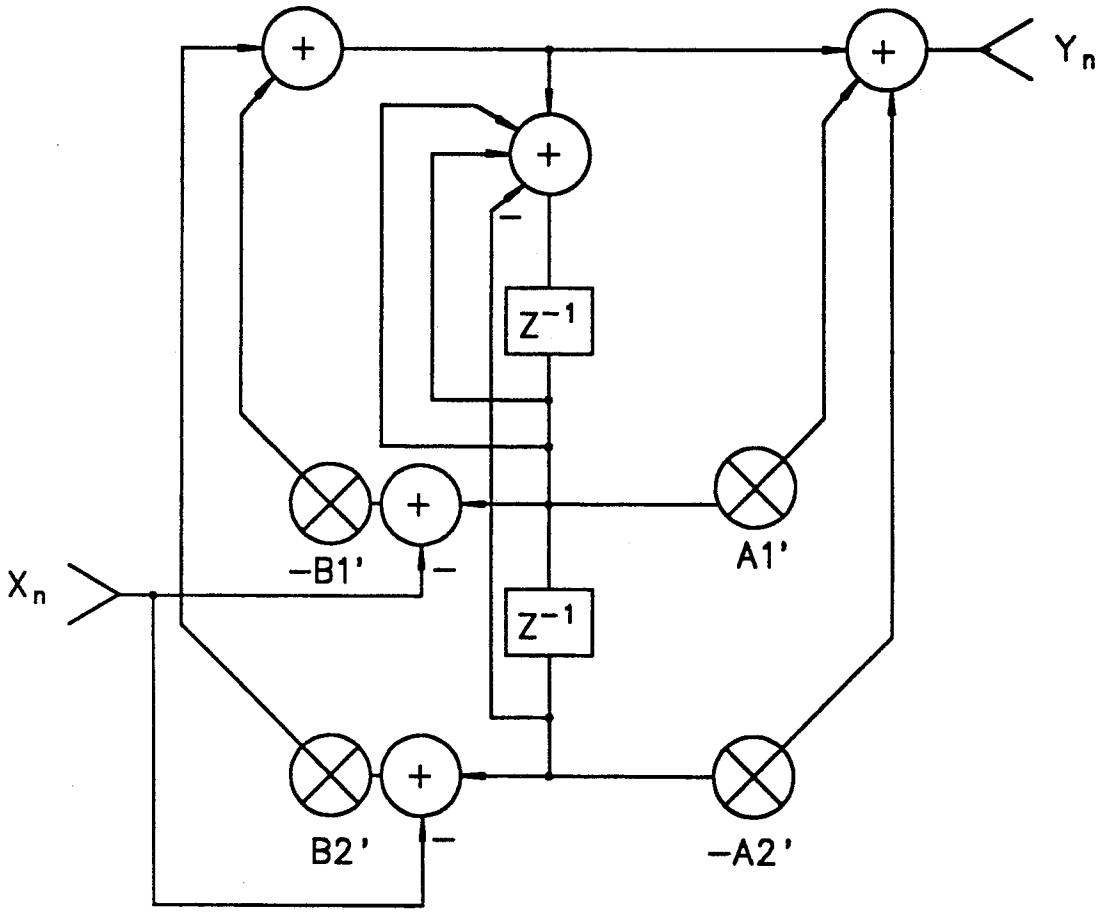

FIG. 5

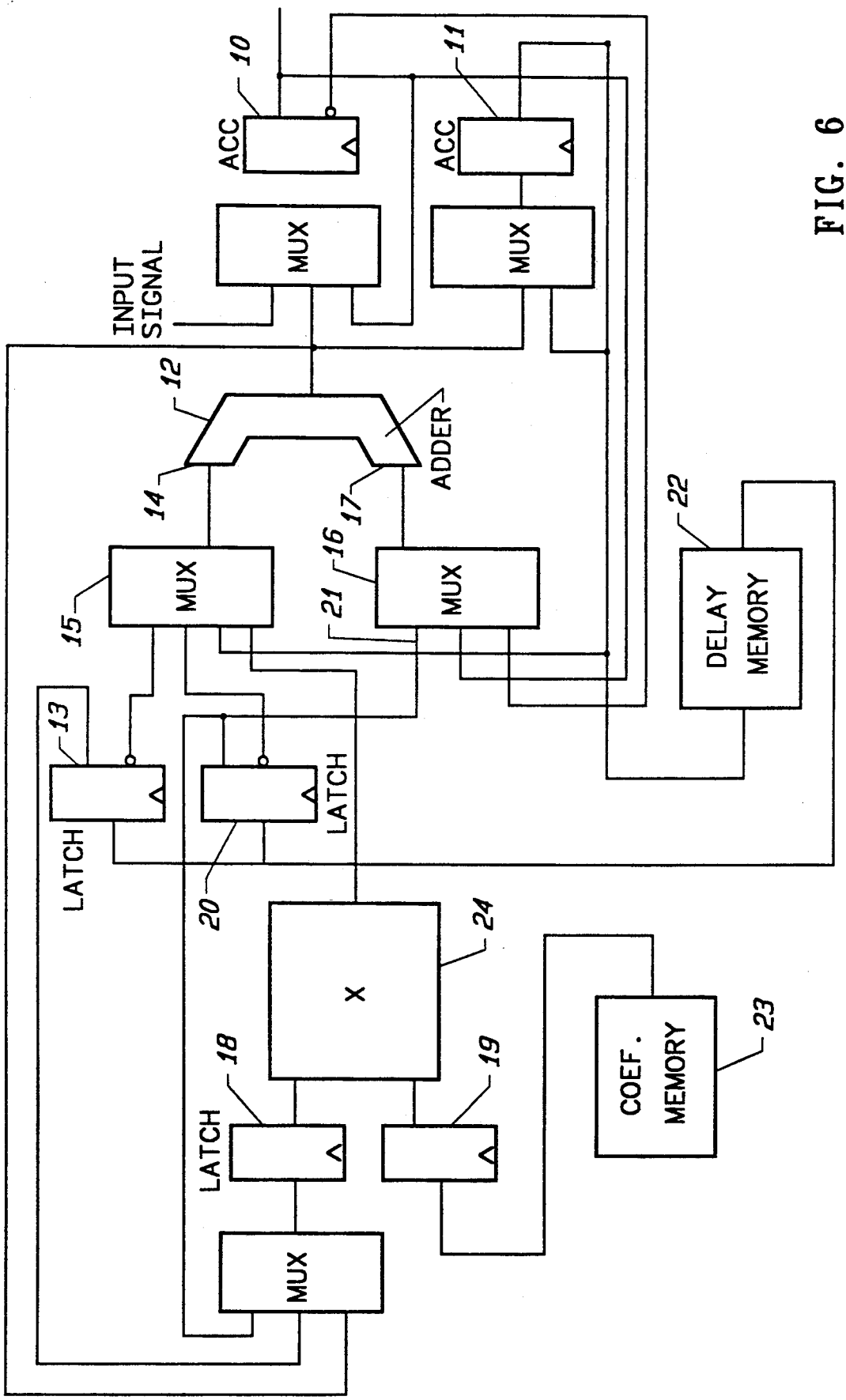
10
ACC
11
ACC
MUX
MUX
INPUT SIGNAL
12
ADDER
14
17
16
22
15
MUX
21
MUX
DELAY MEMORY
13
LATCH
LATCH
20
24
X
18
19
LATCH
COEF. MEMORY
23
MUX

FIG. 6

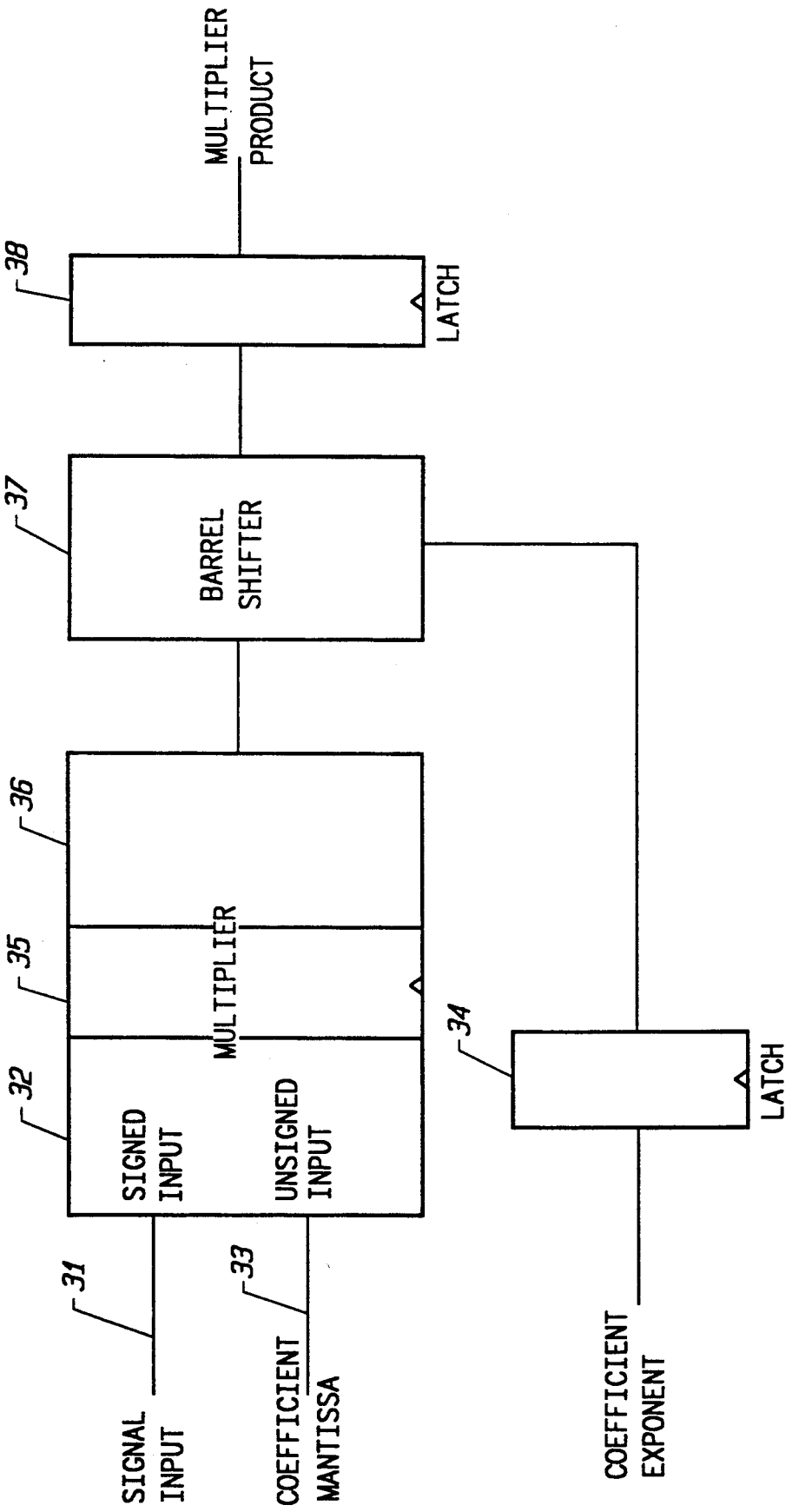
MULTIPLIER PRODUCT
38
LATCH
37
BARREL SHIFTER
36
35
MULTIPLIER
32
SIGNED INPUT
UNSIGNED INPUT
34
LATCH
31
33
SIGNAL INPUT
COEFFICIENT MANTISSA
COEFFICIENT EXPONENT

FIG. 7

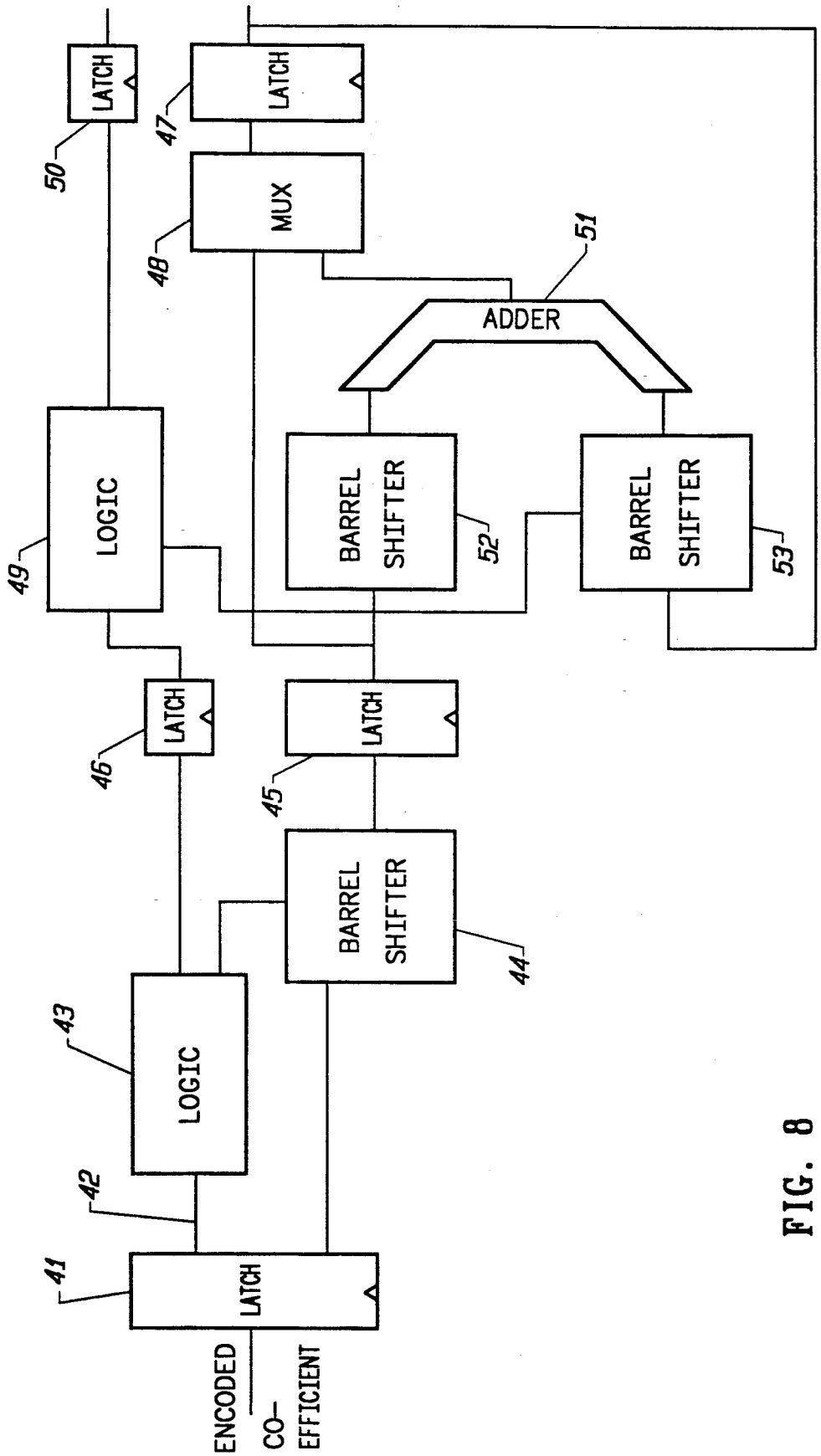
LATCH
50
LATCH
47
MUX
48
51
ADDER
LOGIC
49
BARREL SHIFTER
52
BARREL SHIFTER
53
LATCH
46
LATCH
45
BARREL SHIFTER
44
LOGIC
43
42
LATCH
41
ENCODED CO-EFFICIENT

FIG. 8

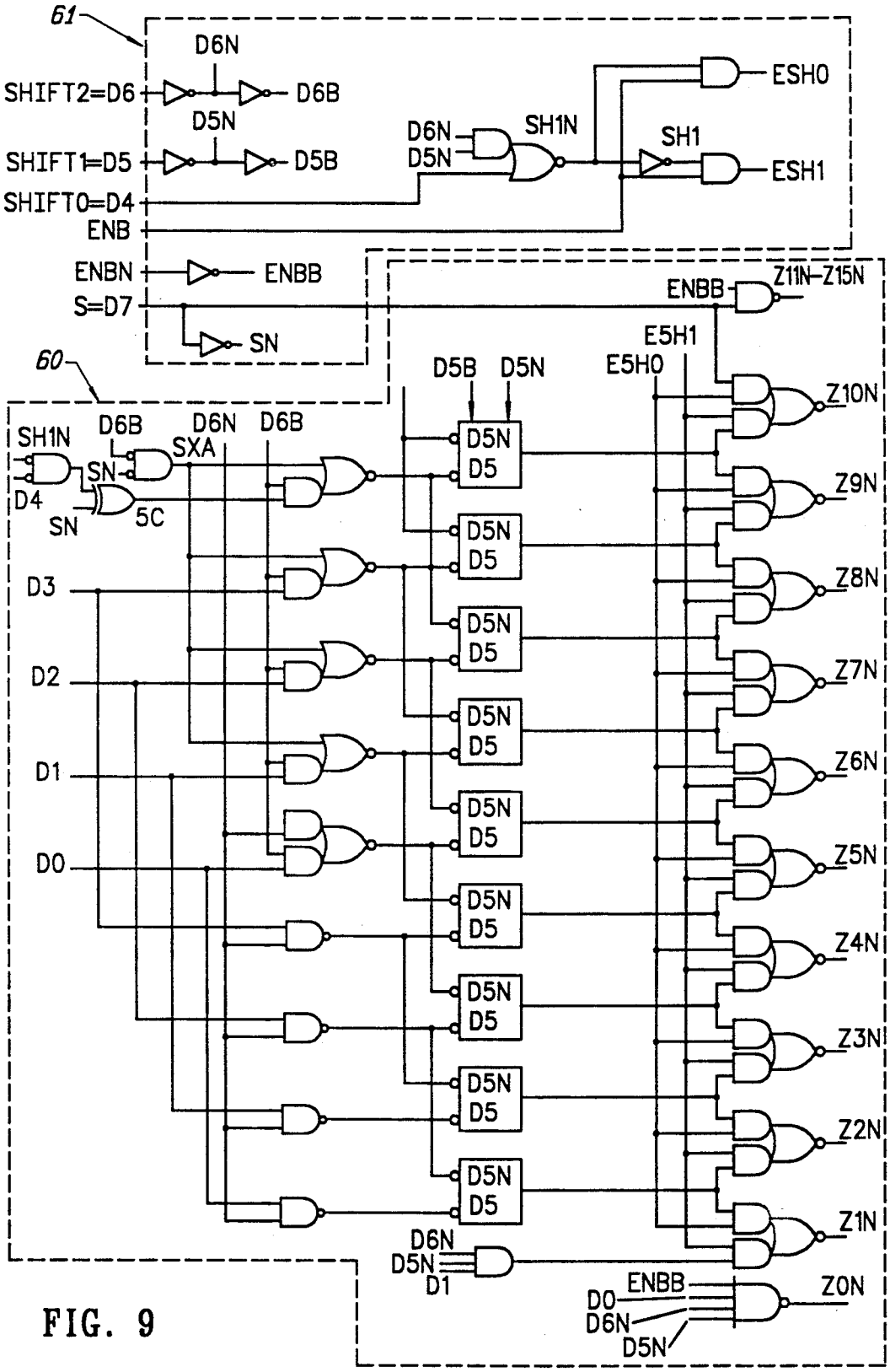
61
D6N
SHIFT2=D6
D6B
D5N
SHIFT1=D5
D5B
SHIFT0=D4
ENB
ENBN
ENBB
S=D7
SN
D6N
D5N
SH1N
SH1
ESH0
ESH1
60
SH1N
D6B
D6N
D6B
SXA
SN
D4
SN
5C
D3
D2
D1
D0
D5B
D5N
D5N
D5
E5H1
E5H0
ENBB
Z11N-Z15N
Z10N
Z9N
Z8N
Z7N
Z6N
Z5N
Z4N
Z3N
Z2N
Z1N
Z0N
D6N
D5N
D1
ENBB
D0
D6N
D5N

FIG. 9

FIG. 10

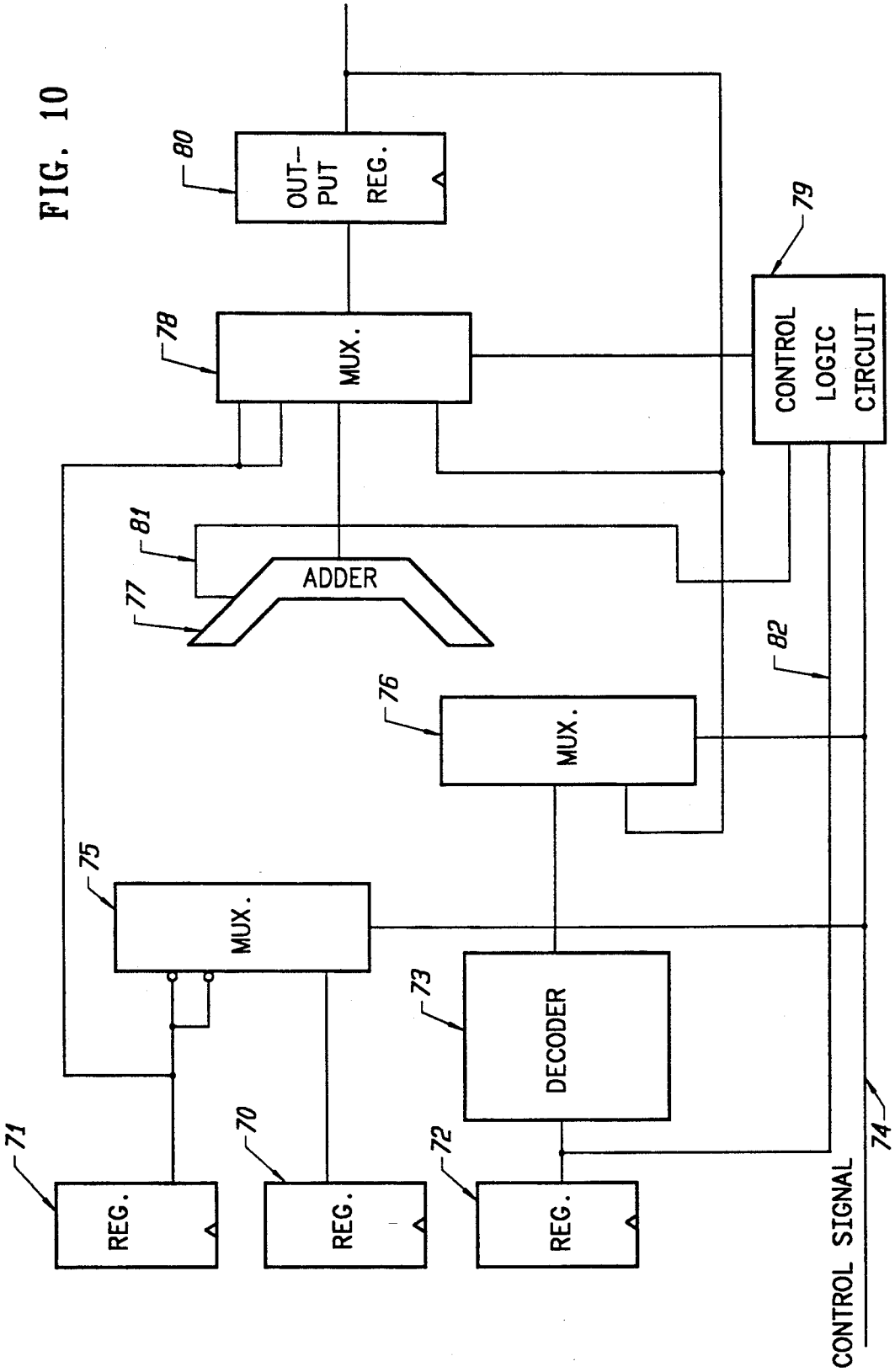
80
OUT-PUT REG.
78
MUX.
79
CONTROL LOGIC CIRCUIT
81
77
ADDER
82
76
MUX.
75
MUX.
73
DECODER
71
REG.
70
REG.
72
REG.
74
CONTROL SIGNAL

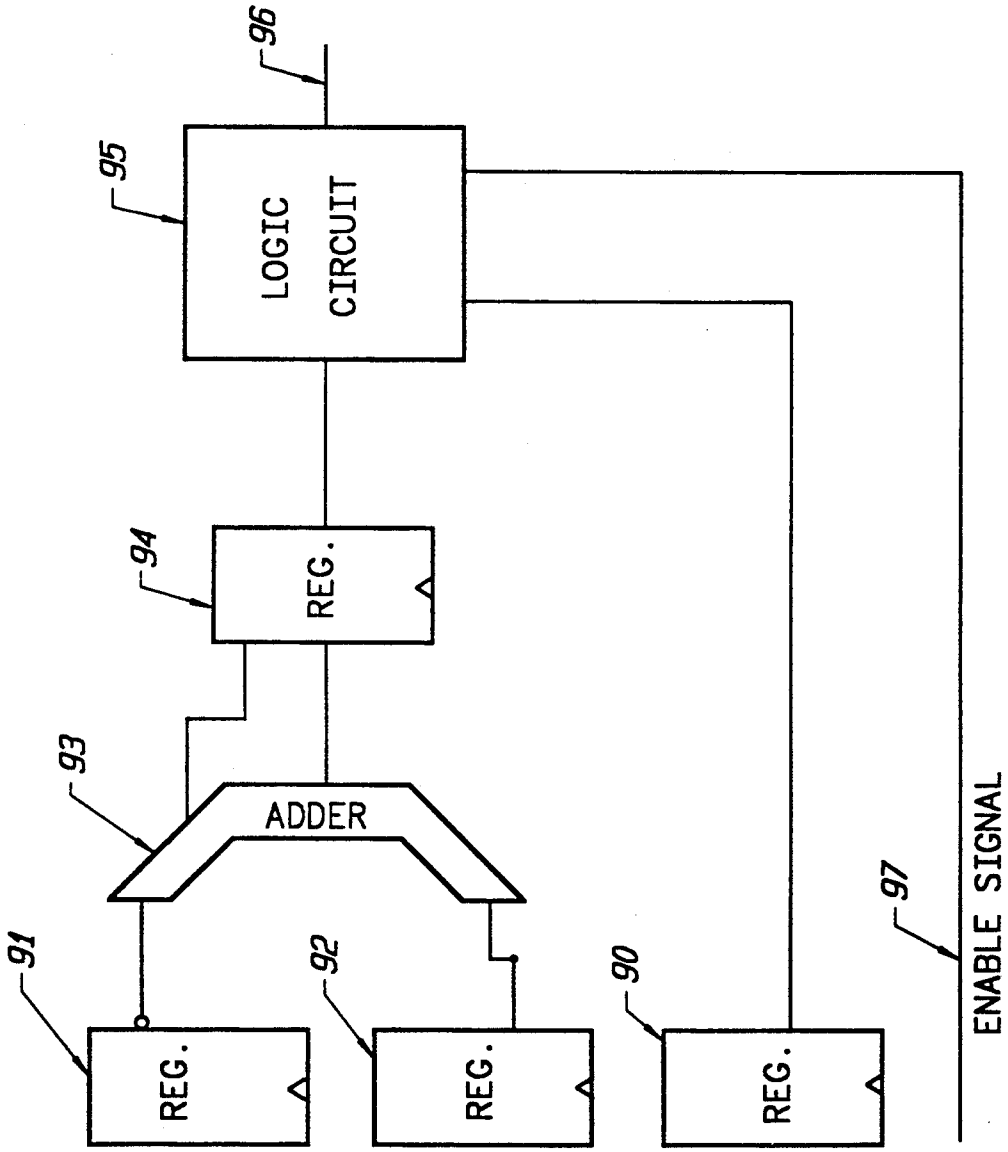
96
95
LOGIC CIRCUIT
94
REG.
93
ADDER
91
REG.
92
REG.
90
REG.
97
ENABLE SIGNAL

FIG. 11

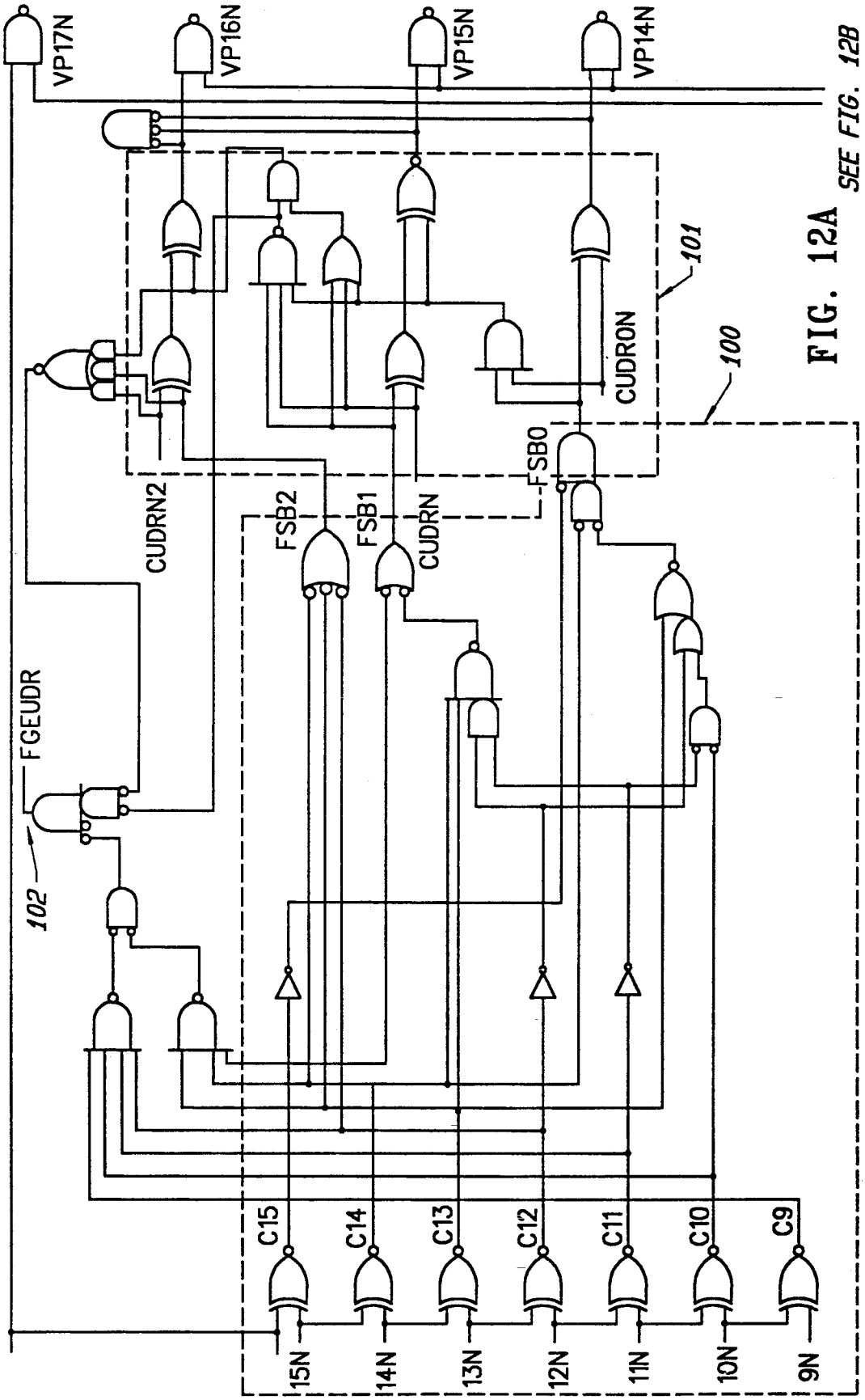
VP17N
VP16N
VP15N
VP14N
SEE FIG. 12B
101
100
CUDRON
FSB0
CUDRN2
FSB2
FSB1
CUDRN
FGEUDR
102
C15
C14
C13
C12
C11
C10
C9
15N
14N
13N
12N
11N
10N
9N

FIG. 12A

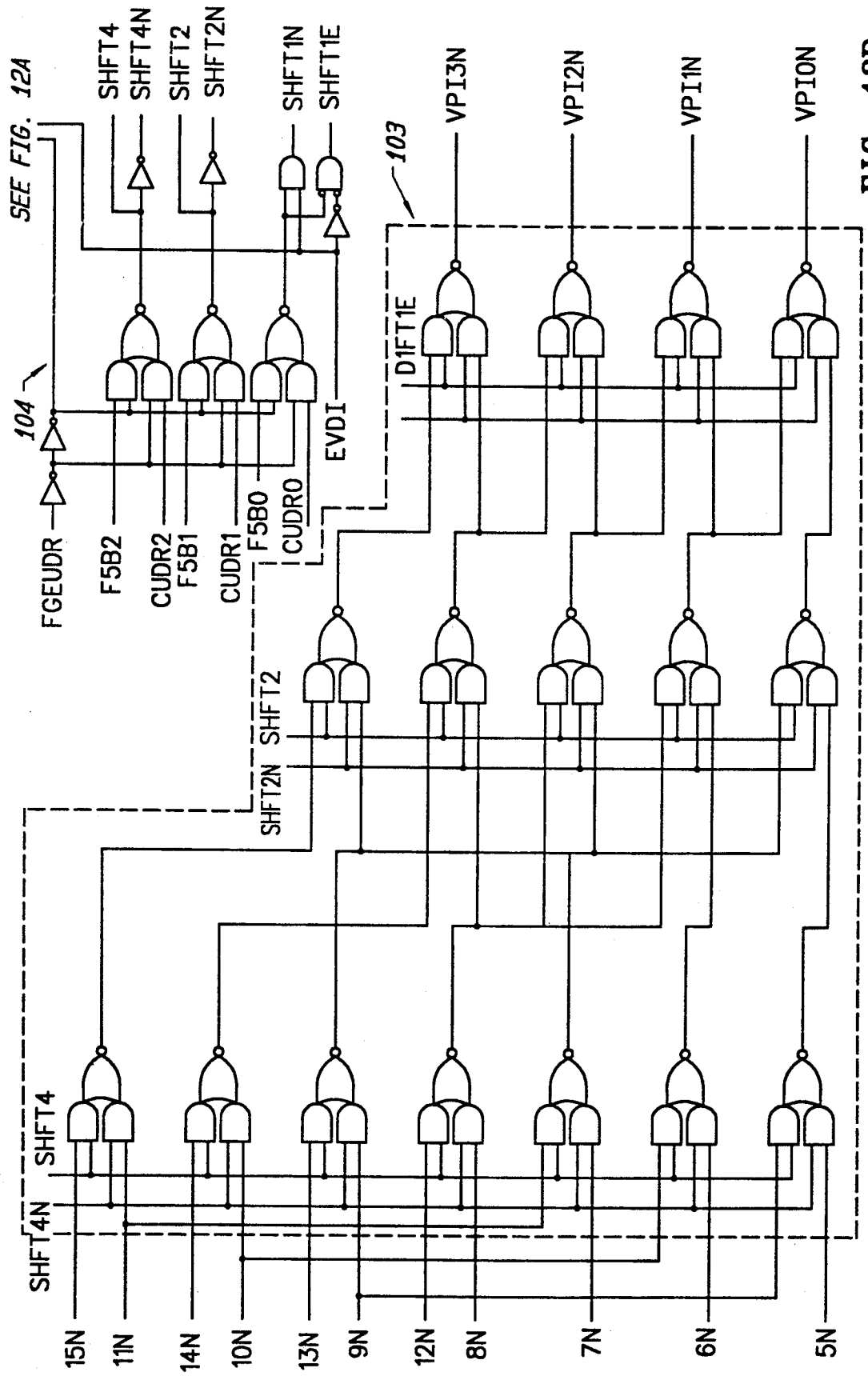
SEE FIG. 12A
SHFT4
SHFT4N
SHFT2
SHFT2N
SHFT1N
SHFT1E
VPI3N
VPI2N
VPI1N
VPI0N
103
104
D1FT1E
EVDI
FGEUDR
F5B2
CUDR2
F5B1
CUDR1
F5B0
CUDR0
SHFT2
SHFT2N
SHFT4
SHFT4N
15N
11N
14N
10N
13N
9N
12N
8N
7N
6N
5N

FIG. 12B

DYNAMIC DIGITAL IIR AUDIO FILTER AND METHOD WHICH PROVIDES DYNAMIC DIGITAL FILTERING FOR AUDIO SIGNALS

CROSS-REFERENCE TO RELATED APPLICATIONS

The present invention is a continuation-in-part of copending patent application entitled DYNAMIC DIGITAL IIR AUDIO FILTER, Ser. No. 411,450, filed Sep. 25, 1989, now abandoned, and which is assigned to the same assignee as the present invention.

BACKGROUND OF THE INVENTION

The present invention relates to a dynamic digital IIR audio filter and corresponding method.

The current state of the art for digital infinite impulse response (IIR) filters for audio applications utilizes long wordlengths to obtain adequate noise performance for adequate sound quality. Typically 24 bit or longer coefficients are used to obtain adequate resolution at low frequencies, and 24 bit multiplier data paths or multiple precision techniques are used to improve noise performance. Finally, extreme dynamic range problems exist when filters with very low frequency passbands are used. The article in the Jan. 1989 Journal of the Audio Engineering Society provides a summary of the current state of the art.

The state of the art in dynamic audio filtering, in which the coefficients are to be changing in time, is even more primitive. Coefficients are typically linearly interpolated, producing filters whose characteristics typically vary dramatically in audio quality over the sweep range from the desired swept response. The coefficients are linearly encoded in the classical IIR filter forms, preventing any logarithmic or audibly meaningful sweep, and requiring long words of typically 24 bits for adequate low frequency resolution. Furthermore, any dynamic sweeping requires computation of the increment required to be added each sample time. This complicates control of the filter during complicated sweeps, and makes it impossible to change the sweep trajectory of the filter mid-sweep without reading back the current sweep location.

SUMMARY OF THE INVENTION

It is an object of the present invention to provide an improved dynamic digital IIR audio filter and method.

It is another object of the present invention to remedy the major problems in state of the art digital IIR filtering and dynamic digital filtering for audio. In particular, the required multiplier coefficient size is reduced, such that 16-bit coefficients are adequate for good frequency resolution. In addition, the data size of the multiplier is also reduced to be similar to the input and output data resolution without inferior noise performance. Furthermore, the structure is easily modified to allow the fixing of the DC gain of the IIR filter to unity regardless of coefficient choice, eliminating any problems with filter dynamic range at low frequency passbands.

Additionally, a dynamic filter structure is disclosed which allows logarithmic filter sweeps, and compresses the coefficients further down to as few as 8 bits with adequate resolution for audio throughout the band.

Finally, a structure is disclosed which allows the alteration of sweep of the filter without excessive computation or the requirement to read the current sweep value.

All of these objectives can be accomplished by the present invention while allowing implementation of up to 128th order filtering on a single silicon integrated circuit.

Additional objects, advantages and novel features of the present invention will be set forth in part in the description which follows and in part become apparent to those skilled in the art upon examination of the following or ay be learned by practice of the invention. The objects and advantages of the invention may be realized and attained by means of the instrumentalities and combinations which are pointed out in the appended claims.

BRIEF DESCRIPTION OF THE DRAWINGS

The accompanying drawings which are incorporated in and form a part of this specification illustrate an embodiment of the invention and, together with the description, serve to explain the principles of the invention.

FIG. **1** depicts a diagram of a prior art digital filter structure.

FIG. **2** depicts another diagram of a prior art digital filter structure.

FIG. **3** depicts a diagram of an improved digital filter structure according to the present invention.

FIG. **4** depicts a diagram of another embodiment of a digital filter structure according to the present invention.

FIG. **5** depicts a further feature of the digital filter according to the present invention.

FIG. **6** depicts an implementation of the improved dynamic digital audio filter according to the present invention.

FIG. **7** depicts a diagram of a multiplier block which forms a portion of FIG. **6**.

FIG. **8** depicts a diagram of a decoding technique which forms a part of the present invention.

FIG. **9** depicts a preferred embodiment of the present invention.

FIG. **10** depicts logic used to update an interpolating variable.

FIG. **11** illustrates circuitry used to implement automatic computation of an encoded increment according to the present invention.

FIGS. **12A** and **12B** show the logic diagram of a portion of FIG. **11**

DETAILED DESCRIPTION OF THE PREFERRED EMBODIMENT

Reference will now be made in detail to the preferred embodiment of the invention, an example of which is illustrated in the accompanying drawings. While the invention will be described in conjunction with the preferred embodiment, it will be understood that it is not intended to limit the invention to that embodiment. On the contrary, it is intended to cover alternatives, modifications and equivalents as may be included within the spirit and scope of the invention as defined by the appended claims.

The classical filter equation for a second order IIR digital filter is

$$Yn = Xn - B1*Yn-1 - B2*Yn-2$$

B1 and B2 form complex conjugate poles at locations:

$$R = \text{sqrt}(B2) \quad \text{theta} = \arccos(-B1/2R)$$

where R is the radius of the pole location and theta is the angle, with zero coresponding to zero frequency and pi coresponding to half the sampling rate or approximately 20 kHz. A classical filter structure to directly implement this equation is shown in FIG. 1. Additionally, a second order FIR stage can be added to produce zeros to complete the classical structure as shown in FIG. 2.

The audio spectrum spans frequencies from 20 Hz to 20 kHz, and is typically logarithmically divided into ten octaves by the ear. The ear's sensitivity to loudness is similarly logarithmic and is approximately a range of 100 decibels (dB), where a decibel is defined as

$$20^* \log10(E/Eref)$$

where E is the signal level and Eref is a reference level.

It is easily seen that the magnitude response of a resonance in a filter produced by a pole is proportional to the difference between the pole's radius and unity. Hence the ear's sensitivity to the position of the pole is tremendously amplified as the pole's radius approaches unity. Hence it would be desirable to develop a filter whose coefficients were proportional to the distance between the pole's radius and unity.

Through a similar argument, emphasizing instead the ear's logarithmic frequency sensitivity, it can be shown that the desirable coefficient relationship for the angle of poles should be such that small numbers represent very small angles, whose cosines approach unity.

If one examines the flow graph of an IIR filter from a noise point of view, one will observe that the quantization of the signal at the input to the multiplier is the source of quantization noise. Reduction in the required truncation at the multiplier input will reduce the noise produced by the filter. It is easily observed that IIR filters become noisier as their poles tend towards unit radius and towards very low or very high frequencies. This can be explained by realizing that in these cases, the recursion within the filter is more severe, hence increasing the adverse effect of the multiplier input truncation noise. If the filter structure can be altered such that in these cases there is less effective quantization noise, improved performance in these interesting cases will result. A filter structure which accomplishes the above structural requirements according to the present invention is shown in FIG. 3, and the extension to add FIR terms in FIG. 4. Note that the coefficients have been modified as per the requirements:

$$B1' = B1 + 2$$

$$B2' = 1 - B2$$

and hence all coefficients are always positive, and the multiplies unsigned.

Another desirable feature for audio filters, in keeping with the objects of the invention, is to force the gain of the filter at zero frequency to be unity. This feature can be accomplished by the structure in FIG. 5. Note that the structures in FIGS. 4 and 5 are easily switched between.

One implementation of the filter according to the present invention is shown in FIG. 6. In one preferred embodiment, a total of four multiplies and eight additions are used. As will later be discussed, this allows four multiplies to be used for interpolation of coefficients in dynamic filtering if the adder and multiplier have the same speed, which is typically the case using modern VLSI components.

In FIG. 6, accumulator **10** is used to accumulate the output signal. Auxilliary accumulator **11** accumulates the value to be saved in the delay memory **22**. The filter operates in eight states. At the beginning of the cycle, accumulator **10** is loaded with the input signal.

During the first cycle, the adder **12** is supplied with negative delay memory **2**'s data from latch **13** at input **14** via multiplexer **15**, and at input **17** the input signal from accumulator **10**, or zero, depending on the DC gain stabilization desired, through multiplexer **16**. The sum is latched into the multiplier input latch **18** to be multiplied by the associated unsigned coefficient B2' from coefficient memory **23**, the output of which will simultaneously be loaded into multiplier input latch **19**.

During the next cycle, negative delay memory **1**'s data from latch **20** is similarly routed to adder input **14**, while input **17** stays the same. The sum is latched again in multiplier input latch **18** for multiplication by unsigned coefficient B1'.

During the third cycle, adder input **14** is switched back to negative delay memory **2**'s data, while adder input **17** is changed by multiplexer **16** to signal **21**, which is positive delay memory **1**'s value shifted left one bit to form twice delay memory **1**'s value. The resulting sum is stored at the end of the cycle in auxilliary accumulator **11**.

During the fourth cycle, the output of the multiplier **24** is routed to added input **14**. This now is the product resulting from coefficient B2'. Adder input **17** will be selected as either negative the input signal as routed from accumulator **10**, or zero, depending on the DC gain stabilitzation requirement. The resulting sum is latched into accumulator **10**.

During the fifth cycle, the output of the multiplier **24**, containing the product resulting from coefficient B1', is routed to adder input **10**. The negative of the contents of accumulator **10** is routed to adder input **17**. The resulting sum is stored in accumulator **10**.

During the sixth cycle, the contents of accumulator **11** is routed to adder input **14**, and of accumulator **10** to input **17**. The resulting sum is saved in accumulator **11** to be stored in delay memory **22**.

During the seventh cycle, the multiplier output, which is the product resulting from coefficient A2', is routed to adder input **14**, and the negative of accumulator **10** routed to input **17**. The resulting sum is stored in accumulator **10**.

During the eighth and final cycle, the multiplier output, which is the product resulting from coefficient A1', is routed to the adder input **14**, and the negative of the signal accumulator is routed to input **17**. The resulting sum, which is the filter output and hence the input to the next stage, is stored in accumulator **10**.

The reservation table for the above pipeline described in conjunction with FIG. 6 is presented below.

RESERVATION TABLE

Adder Input 14	Adder Input 17	Adder CD	Result	A 10 contents	A 11 contents	Prod
Z_2'	$(SA = X_n)$ & DC	1	DC & $X_n - Z_2$	X_n	xx	xx
Z_1'	$(SA = X_n)$ & DC	1	DC & $X_n - Z_1$	X_n	xx	xx
Z_2'	$2Z_1$	1	$2Z_1 - Z_2$	X_n	xx	xx
b_2'(DC & $X_n - Z_2$)	$(SA = X_n')$ & IDC	IDC	−AR2	X_n	$2Z_1 - Z_2$	b2(DC & $X_n - X_2$)
b_1'(DC & $X_n - Z_1$)	SA = −AR2'	1	b_1'(DC & $X_n - Z_1$) + AR2	−AR2	$2Z_1 - Z_2$	b_1(DC & $X_n - Z_1$)
$2Z_1 - ZX_2$	SA = AR	0	Y_n	AR	$2Z_1 - Z_2$	$a_2'Z_2$
$a_2'Z_2$	SA' = AR'	1	$a_2'Z_2$ − AR	AR	Y_n	$a_1'Z_1$
$a_1'Z_1$	SA' = −MA1'	1	MA1 + $a_1'Z_1$	−MA1 $MA_{out} = X_n$	Y_n	xx

AR2 = IDC & $X_n - b_2'$(DC & $X_n - X_2$)
AR = IDC'$X_n + b_1'$(DC & $X_n - Z_1$) + $b_2'(Z_2$ − DC & X_n =AR2 + b_1'(DC & $X_n - Z_1$)
Y_n = IDC'$X_n - b_1'(Z_1$ − DC & X_n) + $b_2'(Z_2$ − DC & X_n) + $_2Z_1 - 2Z_2$ = AR + $_2Z_1 - 2Z_2$
MA1 = IDC'$X_n - b_1'(Z_2$ − DC & X_n) + $b_2'(Z_2$ − DC & X_n) − $a_2'Z_2$ = AR − $a_2'Z_2$
MA_{out} = IDC'$X_n - b_1'(Z_1$ − DC & X_n) + $b_2'(Z_2$ − DC & X_n) + $a_1'Z_1 - a_2'Z_2$ = MA1 + $a_1'Z_1$
Notes:
Y_n must be positive, hence XL must be positive $2Z_1 - Z_2$ or dodi must be complemented, dodi cannot always be complemented as both senses of product area required for MA portion and we cannot add two complements as a carry in of 2 is required. Hence, Z_2 must be complemented, therefore Z_1 should be complemented. We conclude that the B multiplies will be negative Z data.

It should be noted that the multiplier **24** of FIG. **6** uses block floating point techniques on the coefficients to achieve a greater range. The details of the multiplier block are illustrated in FIG. **8**. The signal is applied to the signed input **31** of the multiplier input stage **32** (which consists of the Booth's recoders and wallace trees), and the coefficient mantissa is applied to the unsigned input **33**. The coefficient exponent is applied to the exponent pipeline latch **34**, which is required due to the multiplier pipeline latch **35** which feeds the second stage **36** of the multiplier consisting of the final lookahead carry adder. This in turn feeds barrel shifter **37**, which adjusts for the previous coefficient's exponent. The final product, correctly scaled, is stored in product latch **38**.

In accordance with the objects of the current invention, logarithmic interpolation of the coefficients is required to produce audibly meaningful sweeps. This is accomplished not through true logarithmic interpolation, but rather through linear interpolation of approximately logarithmically encoded coefficients.

The poles of the filter are assumed to be, for important cases, near zero frequency and near unity radius. Hence, $B2' = 1 - B2 = 1 - R2 = 1 - (1 - 2d + d2)$ if $R = 1 - d$. Since R is close to 1, d is small and d2 is very small, so B2' is approximately 2d, and hence proportional to the distance from the pole to the unit circle. Consequently a nominally logarithmic coding for B2' will be an audibly meaningful coding.

Similarly, if the poles angle t is near zero, cos(t) will be approximately $1 - t2$, hence $B1' = 2 + B1 = 2 - 2R\cos(t) = 2 - 2(1-d)(1-t2) = 2d + 2-(1-d)t2$ which is approximately $B2' + 2t2$. One can thus logarithmically encode the difference between B1' and B2' and accomplish the objective of approximating logarithmic frequency and resonance control.

The actual decoding can be accomplished by means of either a ROM or a shifting technique. The latter is demonstrated in FIG. **9**.

In FIG. **9**, the coefficient to be decoded is held in coefficient latch **41**. In the case of a static filter, this would be supplied from a memory holding the coefficients; in the case of a dynamic filter, this would be the output of the coefficient math unit, which would add the lower coefficient to the product of the interpolating variable times the coefficient differences. The most significant bits **42**, (in this case 4 bits are used), are routed through the shift decoding logic **43**, to determine the degree of shift in the barrel shifter **44**. The resulting decoded coefficient is stored in latch **45**. If block floating point coefficients are used, the shift logic can additionally or alternatively output an exponent into exponent latch **46**. If the coefficient is a second coefficient (B2' or A2'), the result is directly passed to the final output latch **47** through multiplexer **48**, and exponent control logic **49** passes the exponent unchanged into exponent output latch **50** if block floating point is used.

If the coefficient is a first coefficient (which must be processed second), then adder **51** adds the previously computed second coefficient as stored in **47** to the decoded difference in latch **45**, and the result passes through multiplexer **48** into the output latch. If block floating point is used, the exponent logic **49** must control barrel shifters **52** and **53** to normalize the addition.

The coefficients are interpolated according to the formula $C(x) = Ca + x(Cb - Ca)$, where x varies from zero to unity. This requires one multiply per coefficient, and with two coefficients each for poles and zeros one can use the available four multipliers to make complete use of the required hardware in a time division multiplexed system.

The interpolating variable x is updated in the known manner of incrementing its value each sample period, and clamping the result to a final known value when the clamp value is exceeded. This works well when both the increment and clamp are computed externally as the dynamic sweep rate and destination. However, this method fails when a slow controlling processor is generating the sweep variables, and a real time command requires the change to a new destination using a sweep while the current sweep is in progress. In this case, the slower processor must calculate new new sweep increment based on the current value of the interpolating variable x and the destination value. Unfortunately, the interpolating variable x continues to be incremented according to the old sweep while the slow processor calculates its result, with an inaccurate (or even worse, the wrong signed) increment saved when the computation is done.

The solution to this problem is another aspect of the present invention. Rather than supplying the interpolating hardware with both a destination and increment, the interpolator is supplied with a destination and an approach time in samples. The interpolator computes within a single sample period the difference between the destination and current value, divides this by the time, and stores the result in the increment.

The preferred embodiment of this solution will now be described. The increment is stored in a compressed value as indicated in Table I. The 8-bit value S, shift2, shift1, shift0, d3, d2, d1, d0 is translated into a signed 16-bit linear value from −20408 to 2047, using the logic circuitry shown in FIG. **10**. Sign bit S and data bits d3, d2, d1 and d0 are shifted in a sign-extended matter by barrel shifter **60**. The control of the shifter is performed by logic **61** to conform to the translation defined in Table I below.

TABLE I

16bitl F	d15	d14	d13	d12	d11	d10	d9	d8	d7	d6	d5	d4	d3	d2	d1	d0	shift
7	S	S	S	S	S	S*	d3	d2	d1	d0	0	0	0	0	0	0	0
6	S	S	S	S	S	S	S*	d3	d2	d1	d0	0	0	0	0	0	1
5	S	S	S	S	S	S	S	S*	d3	d2	d1	d0	0	0	0	0	2
4	S	S	S	S	S	S	S	S	S*	d3	d2	d1	d0	0	0	0	3
3	S	S	S	S	S	S	S	S	S	S*	d3	d2	d1	d0	0	0	4
2	S	S	S	S	S	S	S	S	S	S	S*	d3	d2	d1	d0	0	5
1	S	S	S	S	S	S	S	S	S	S	S	S*	d3	d2	d1	d0	6
0	S	S	S	S	S	S	S	S	S	S	S	S	d3	d2	d1	d0	6

NOTE:
Adder carry is set for increment add during positive increments. This means that a zero increment cannot be reached (instead, set target to correct value), and that the increment ranges for positive and negative are the same (0001-07c1 = ffff − f83f). This simplifies automatic decoding from target-value, as zero cannot be reached on underflow.

The clamp value is similarly an 8-bit value, which is translated into a 16-bit linear value by simply duplicating the bits twice. For example, 5a hexidecimal would translate to 5a5a hexidecimal. FIG. **11** illustrates the logic used to add update the 16-bit interpolating variable using the 8-bit increment and clamp.

In FIG. **11**, register **70** holds the current value of the 1 6-bit interpolating variable. Register **71** holds the 8-bit clamp value, and register **72** holds the 8-bit encoded increment value. Decoder **73** decodes the 8-bit increment into a 16-bit signed linear value. Signal **74** controls the two phases of the operation. In the first phase, multiplexers **75** and **76** select as the inputs to the added **77** the current value and linear increment, and multiplexer **78** is controlled by logic unit **79** so that the incremented current value appears in output register **80**. Logic **79** also notes the state of the adder carry signal **81** with respect to the increment sign bit **82**, such that an arithmetic overflow can be detected during this phase. In the second phase, multiplexers **75** and **76** select the inverted clamp value and incremented current value respectively, and hence adder **77** determines the difference between these values. The state of adder carry signal **81** and increment sign bit **82** now allows control logic **79** to determine if the incremented current value has exceeded the current value; that is, if the increment sign is positive and the incremented current value is greater than the clamp, or if the increment sign is negative and the incremented current value is less than the clamp. If the incremented current value exceeds the clamp, or if overlow occurred during phase **1**, then logic **79** causes multiplexer **78** to select the 16-bit clamp value; otherwise the incremented current value is selected. At the end of the second phase, register **80** contains the properly computed new current value.

FIG. **12** illustrates the circuitry required to implement the automatic computation of the required encoded 8-bit increment, based on a destination (clamp) value, current value and approach time. The approach time is selected from eight possible values, each a power or two greater, with the lowest being 32 sample periods. This approach time is stored in register **90**. The current value of the interpolator is stored in register **91**, and the destination is stored in register **92**. Adder **93** computes the difference between the destination and current value, which is then stored in register **94**. Logic **95** computes the required increment to reach the destination in approach time samples. The 8-bit value is output on signal lines **96** when enable signal **97** is active.

FIG. **13** shows the detailed logic with block **95**. Logic **100** determines the first set bit, that is, the first bit different from the sign bit. Logic **101** determines the shift bits of the required increment based on the first set bit and the selected approach time indicated by CUDR2N, CUDR1N and CUDRON. Signal **102** indicates that the first set bit is greater than or equal to the selected approach time, which determines the function of data bit barrel shifter **103**. If the first set bit is greater than or equal to the selected approach time, the first set bit determines the shifting of the data bits. Otherwise, the selected approach time determines the shifting of the bits. Enable signal **104** simply allows the value to be driven onto the circuit outputs. When the enable is invalid, all outputs are logical 1's. Table II below illustrates the resulting outputs as a function of the difference input and the selected approach time.

TABLE II

ARMAdillo Interpolator Increment Decoding:

Difference	Binary	FSB	@ .6	@ 1.2	@ 2.4	@ 4.8	@ 9.6	@ 20	@ 40	@ 80
0ffff-0f800	011111xxxxxxxxxxx	15	7f	6f	5f	4f	3f	2f	1f	0f
0f7ff-0f000	011110xxxxxxxxxxx	15	7e	6e	5e	4e	3e	2e	1e	0f
0efff-0e800	011101xxxxxxxxxxx	15	7d	6d	5d	4d	3d	2d	1d	0e
087ff-08000	010000xxxxxxxxxxx	15	70	60	50	40	30	20	10	08
07fff-07c00	0011111xxxxxxxxxx	14	6f	5f	4f	3f	2f	1f	0f	07
07bff-07800	0011110xxxxxxxxxx	14	6e	5e	4e	3e	2e	1e	0f	07
077ff-07400	0011101xxxxxxxxxx	14	6d	5d	4d	3d	2d	1d	0e	07
043ff-04000	0010000xxxxxxxxxx	14	60	50	40	30	20	10	08	04
03fff-03e00	00011111xxxxxxxxx	13	5f	4f	3f	2f	1f	0f	07	03
03dff-03c00	00011110xxxxxxxxx	13	5e	4e	3e	2e	1e	0f	07	03
021ff-02000	00010000xxxxxxxxx	13	50	40	30	20	10	08	04	02
01fff-01100	000011111xxxxxxxx	12	4f	3f	2f	1f	0f	07	03	01
01eff-01e00	000011110xxxxxxxx	12	4e	3e	2e	1e	0f	07	03	01
010ff-01000	000010000xxxxxxxx	12	40	30	20	10	08	04	02	01
00fff-00f80	0000011111xxxxxxx	11	3f	2f	1f	0f	07	03	01	00

TABLE II-continued

ARMAdillo Interpolator Increment Decoding:

Difference	Binary	FSB	@ .6	@ 1.2	@ 2.4	@ 4.8	@ 9.6	@ 20	@ 40	@ 80
00f7f-00f00	0000011110xxxxxx	11	3e	2e	1e	0f	07	03	01	00
0087f-00800	0000010000xxxxxx	11	30	20	10	08	04	02	01	00
007ff-007c0	00000011111xxxxxx	10	2f	1f	0f	07	03	01	00	00
007bf-00780	00000011110xxxxxx	10	2e	1e	0f	07	03	01	00	00
0077f-00740	00000011101xxxxxx	10	2d	1d	0e	07	03	01	00	00
0073f-00700	00000011100xxxxxx	10	2c	1c	0e	07	03	01	00	00
006ff-006c0	00000011011xxxxxx	10	2b	1b	0d	06	03	01	00	00
006bf-00680	00000011010xxxxxx	10	2a	1a	0d	06	03	01	00	00
0067f-00640	00000011001xxxxxx	10	29	19	0c	06	03	01	00	00
0063f-00600	00000011000xxxxxx	10	28	18	0c	06	03	01	00	00
005ff-005c0	00000010111xxxxxx	10	27	17	0b	05	02	01	00	00
005bf-00580	00000010110xxxxxx	10	26	16	0b	05	02	01	00	00
0057f-00540	00000010101xxxxxx	10	25	15	0a	05	02	01	00	00
0053f-00500	00000010100xxxxxx	10	24	14	0a	05	02	01	00	00
004ff-004c0	00000010011xxxxxx	10	23	13	09	04	02	01	00	00
004bf-00480	00000010010xxxxxx	10	22	12	09	04	02	01	00	00
0047f-00440	00000010001xxxxxx	10	21	11	08	04	02	01	00	00
0043f-00400	00000010000xxxxxx	10	20	10	08	04	02	01	00	00
003ff-003e0	000000011111xxxxx	9	1f	0f	07	03	01	00	00	00
0021f-00200	000000010000xxxxx	9	10	08	04	02	01	00	00	00
001ff-001e0	000000001111xxxxx	8	0f	07	03	01	00	00	00	00
0011f-00100	000000001000xxxxx	8	08	04	02	01	00	00	00	00
000ff-000e0	000000000111xxxxx	<8	07	03	01	00	00	00	00	00
0001f-00000	000000000000xxxxx	<8	00	00	00	00	00	00	00	00
1000-107ff	100000xxxxxxxxxxx	15	f0	e0	d0	c0	b0	a0	90	80
10800-10fff	100001xxxxxxxxxxx	15	f1	e1	d1	c1	b1	a1	91	80
11000-117ff	100010xxxxxxxxxxx	15	f2	e2	d2	c2	b2	a2	92	81
17800-17fff	101111xxxxxxxxxxx	15	ff	ef	df	cf	bf	af	9f	87
18000-183ff	1100000xxxxxxxxxx	14	e0	d0	c0	b0	a0	90	80	88
18400-187ff	1100001xxxxxxxxxx	14	e1	d1	c1	b1	a1	91	80	88
18800-18bff	1100010xxxxxxxxxx	14	e2	d2	c2	b2	a2	92	81	88
1bc00-1bfff	1101111xxxxxxxxxx	14	ef	df	cf	bf	af	9f	87	8b
1c000-1c1ff	11100000xxxxxxxxx	13	d0	c0	b0	a0	90	80	88	8c
1c200-1c3ff	11100001xxxxxxxxx	13	d1	c1	b1	a1	91	80	88	8c
1deff-1dfff	11101111xxxxxxxxx	13	df	cf	bf	af	9f	87	8b	8d
1e000-1e0ff	111100000xxxxxxxx	12	c0	b0	a0	90	80	88	8c	8e
1e100-1e1ff	111100001xxxxxxxx	12	c1	b1	a1	91	80	88	8c	8e
1ef00-1efff	111101111xxxxxxxx	12	cf	bf	af	9f	87	8b	8d	8e
1f000-1f07f	1111100000xxxxxxx	11	b0	a0	90	80	88	8c	8e	8f
1f800-1f0ff	1111100001xxxxxxx	11	b1	a1	91	80	88	8c	8e	8f
1f780-1f7ff	1111101111xxxxxxx	11	bf	af	9f	87	8b	8d	8e	8f
1f800-1f83f	11111100000xxxxxx	10	a0	90	80	88	8c	8e	8f	8f
1f840-1f87f	11111100001xxxxxx	10	a1	91	80	88	8c	8e	8f	8f
1f880-1f8bf	11111100010xxxxxx	10	a2	92	81	88	8c	8e	8f	8f
1f8c0-1f8ff	11111100011xxxxxx	10	a3	93	81	88	8c	8e	8f	8f
1f900-1f93f	11111100100xxxxxx	10	a4	94	82	89	8c	8e	8f	8f
1f940-1f97f	11111100101xxxxxx	10	a5	95	82	89	8c	8e	8f	8f
1f980-1f9bf	11111100110xxxxxx	10	a6	96	83	89	8c	8e	8f	8f
1f9c0-1f9ff	11111100111xxxxxx	10	a7	97	83	89	8c	8e	8f	8f
1fa00-1fa3f	11111101000xxxxxx	10	a8	98	84	8a	8d	8e	8f	8f
1fa40-1fa7f	11111101001xxxxxx	10	a9	99	84	8a	8d	8e	8f	8f
1fa80-1fabf	11111101010xxxxxx	10	aa	9a	85	8a	8d	8e	8f	8f
1fac0-1faff	11111101011xxxxxx	10	ab	9b	85	8a	8d	8e	8f	8f
1fb00-1fb3f	11111101100xxxxxx	10	ac	9c	86	8b	8d	8e	8f	8f
1fb40-1fb7f	11111101101xxxxxx	10	ad	9d	86	8b	8d	8e	8f	8f
1fb80-1fbbf	11111101110xxxxxx	10	ae	9e	87	8b	8d	8e	8f	8f
1fbc0-1fbff	11111101111xxxxxx	10	af	9f	87	8b	8d	8e	8f	8f
1fc00-1fc1f	111111100000xxxxx	9	90	80	88	8c	8e	8f	8f	8f
1fde0-1fdff	111111101111xxxxx	9	9f	87	8b	8d	8e	8f	8f	8f
1fe00-1fe1f	111111110000xxxxx	8	80	88	8c	8e	8f	8f	8f	8f
1fee0-1feff	111111110111xxxxx	8	87	8b	8d	8e	8f	8f	8f	8f
1ff00-1ff1f	111111111000xxxxx	<8	88	8c	8e	8f	8f	8f	8f	8f
1ffe0-1ffff	111111111111xxxxx	<8	8f	8f	8f	8f	8f	8f	8f	8f

The foregoing description of the preferred embodiment of the invention has been presented for purposes of illustration and description. It is not intended to be exhaustive or to limit the invention to the precise form disclosed, and many modifications and variations are possible in light of the above teaching. The preferred embodiment was chosen and described in order to best explain the principles of the invention and its practical applications to thereby enable others skilled in the art to best utilize the invention and various embodiments and with various modifications as are suited to the particular use contemplated. It is intended that the scope of the invention be defined only by the claims appended hereto.

What is claimed is:

1. A dynamic digital audio filter comprising

adding means for receiving an input audio signal,

first and second unit delay means connected to an output of said adding means for forming first and second unit output delays each having a first bit width, respectively, wherein the first unit delay is one time unit and wherein the second unit delay is two time units,

means for providing a first unsigned coefficient and a second unsigned coefficient,

unsigned multiplying means receiving said first and second output delays, wherein the inputs to said multiplying means are a truncation of said first and second output delays each having a truncated bit width such that the truncated bit width is less than said first bit width so as to form a first truncated delay and a second truncated delay,

said unsigned multiplying means including means for providing said first unsigned coefficient times the first truncated delay and second unsigned coefficient times the second truncated delay,

means for shifting the output of said first delay means to multiply by two,

means for forming a 2's complement of the output of said second delay means, and

said adding means including means for forming an output signal which is a sum of said input audio signal, the output of said first delay means shifted to multiply by two, the 2's complement output of said second delay means, the first unsigned coefficient times the first truncated delay, and the second unsigned coefficient times the second truncated delay.

2. A digital filter as in claim **1** including means for forming a difference between said first delay and said input audio signal and wherein said sum includes the first unsigned coefficient times the difference between said first delay and said input audio signal and including means for forming a difference between said second delay and said input audio signal and wherein said sum includes the second unsigned coefficient times the difference between said second delay and said input audio signal.

3. A digital filter as in claim **1** further including a finite impulse response filter.

4. A digital filter as in claim **1** including first storage means and wherein said second coefficient is stored in a logarithmically compressed format in said first storage means.

5. A digital filter as in claim **4** including second storage means and including a third coefficient stored in said second storage means in a logarithmically compressed format representative of a difference between said first and second coefficients.

6. A digital filter as in claim **5** including means for interpolating between said first and second coefficients.

7. In a dynamic digital audio filter for filtering an input audio signal wherein said filter includes first and second unit delays for forming first and second unit output delays having a first bit width wherein the first unit delay is one time unit and wherein the second unit delay is two time units, an unsigned multiplying means wherein an input to said multiplying means is a truncation of said first and second output delays each having a truncated bit width such that the truncated bit widths are less than said first bit width so as to form first and second truncated delays, an adding means, the method comprising the steps of

providing a first unsigned coefficient and a second unsigned coefficient, providing said first unsigned coefficient times the first truncated delay and said second unsigned coefficient times the second truncated delay,

receiving said first and second truncated delays,

shifting the output of said first unit delay to multiply by two,

forming a 2's complement of the output of said second unit delay, and

forming an output delayed signal which is a sum of said input audio signal, the output of said first unit delay shifted to multiply by two, the 2's complement output of said second unit delay, a first unsigned coefficient times the first truncated delay, and a second unsigned coefficient times the second truncated delay.

* * * * *