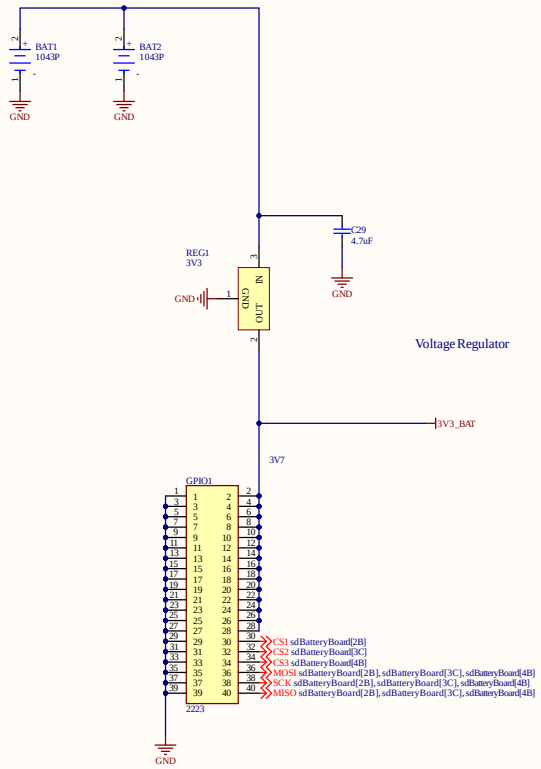

Title		
Size C	Number	Revision
Date: 3/01/2026		Sheet of
File: C:\Users\...\batteryBoardSheet1.SchDoc		Drawn By:

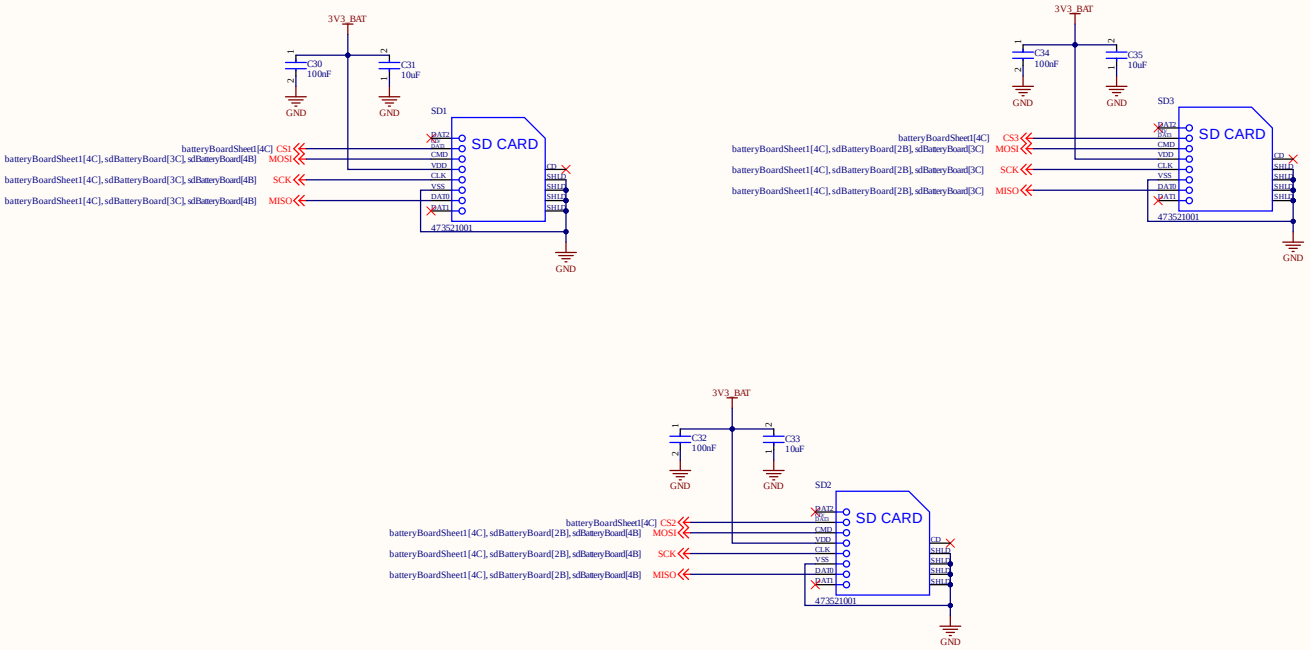

Title		
Size C	Number	Revision
Date: 3/01/2026		Sheet of
File: C:\Users\..\sdBatteryBoard.SchDoc		Drawn By:

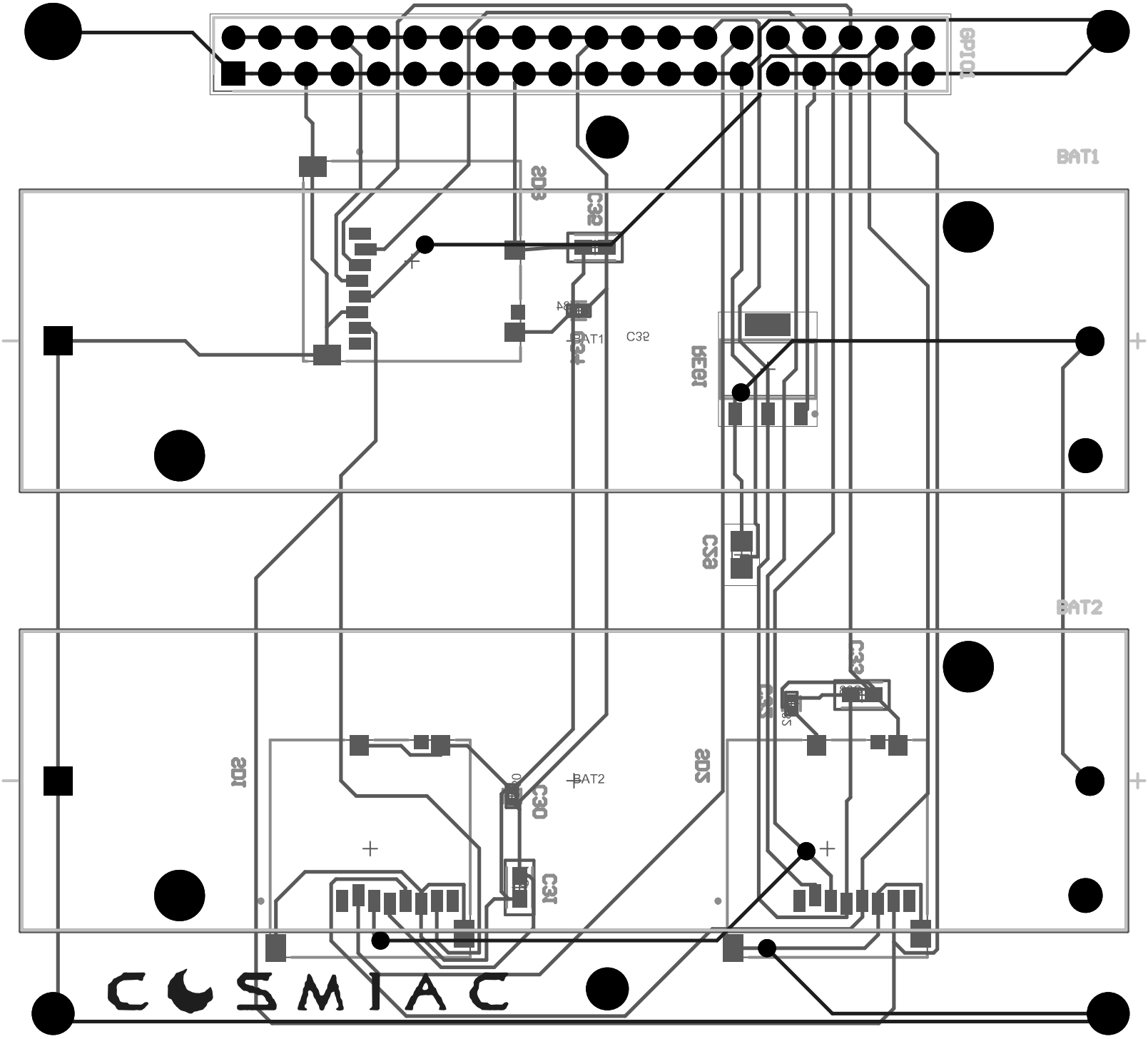
GPIO1
BAT1
BAT2
C32
C31
C30
C33
C34
C35
C36
C37
C38
C39
C40
C41
C42
C43
C44
C45
C46
C47
C48
C49
C50
C51
C52
C53
C54
C55
C56
C57
C58
C59
C60
C61
C62
C63
C64
C65
C66
C67
C68
C69
C70
C71
C72

Board Stack Report