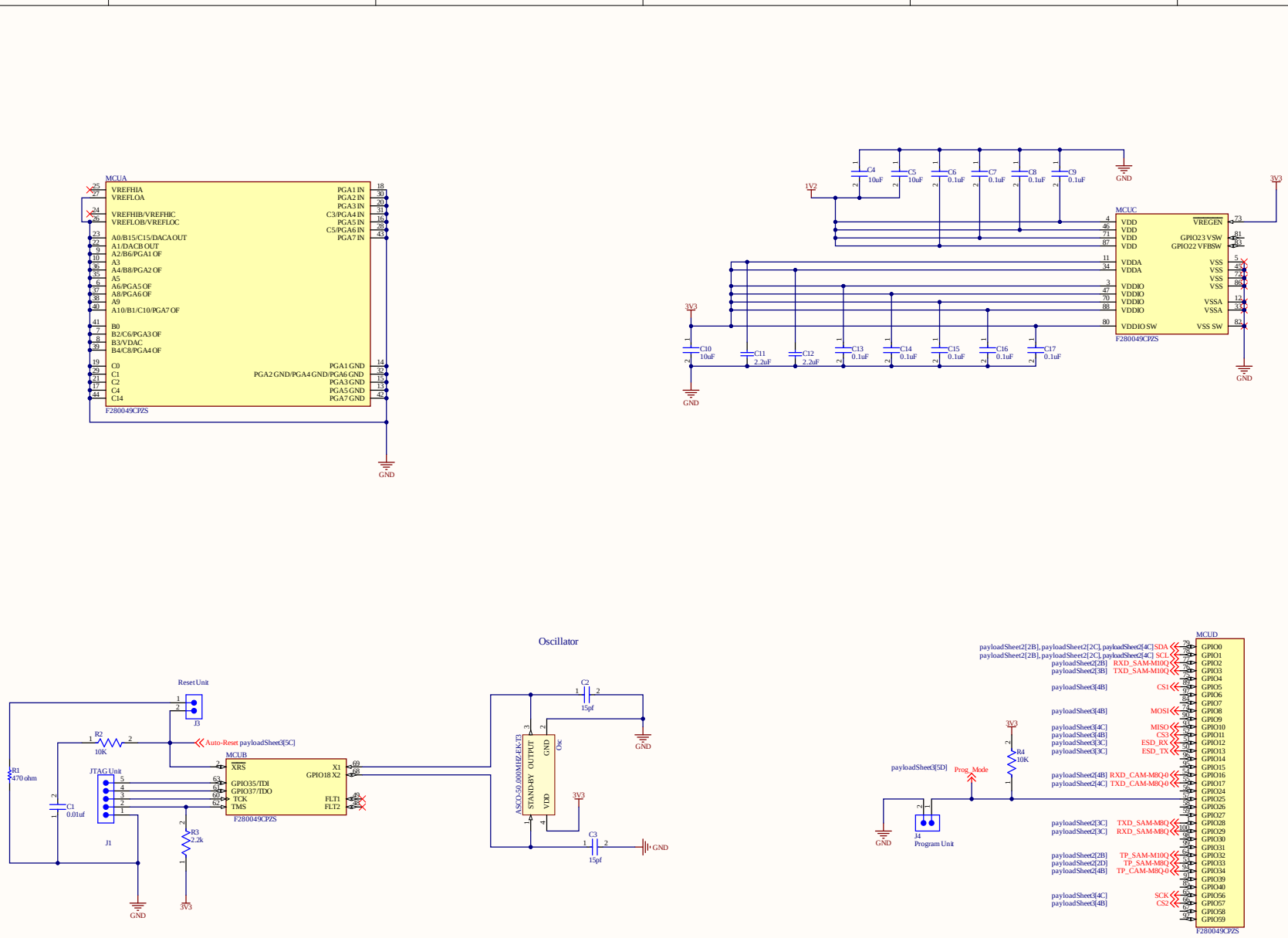

Title		
Size C	Number	Revision
Date: 3/01/2026		Sheet of
File: C:\Users\..\payloadSheet1.SchDoc		Drawn By:

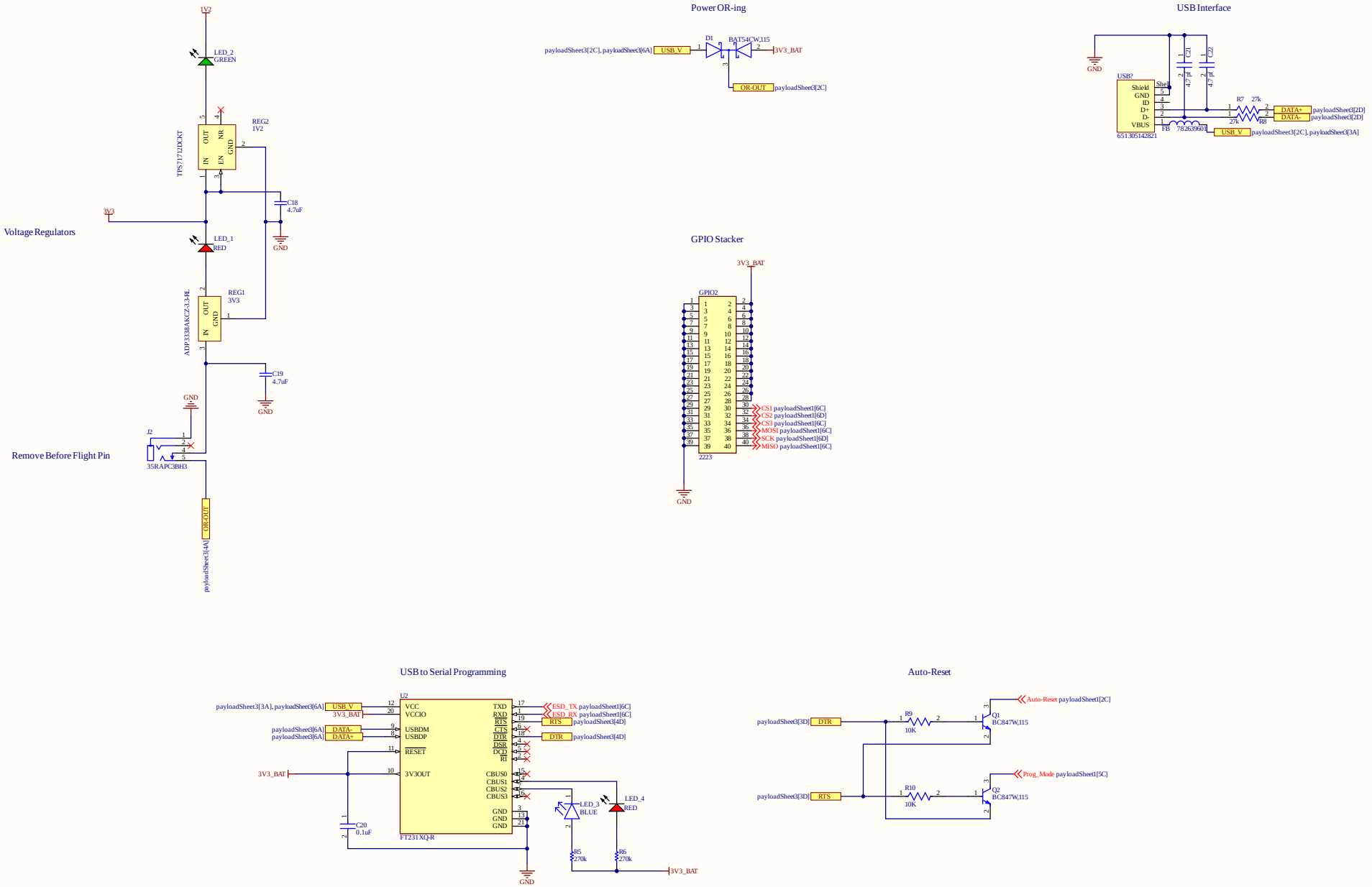

Title		
Size C	Number	Revision
Date: 3/01/2026	Sheet of	
File: C:\Users\...\payloadSheet3.SchDoc	Drawn By:	

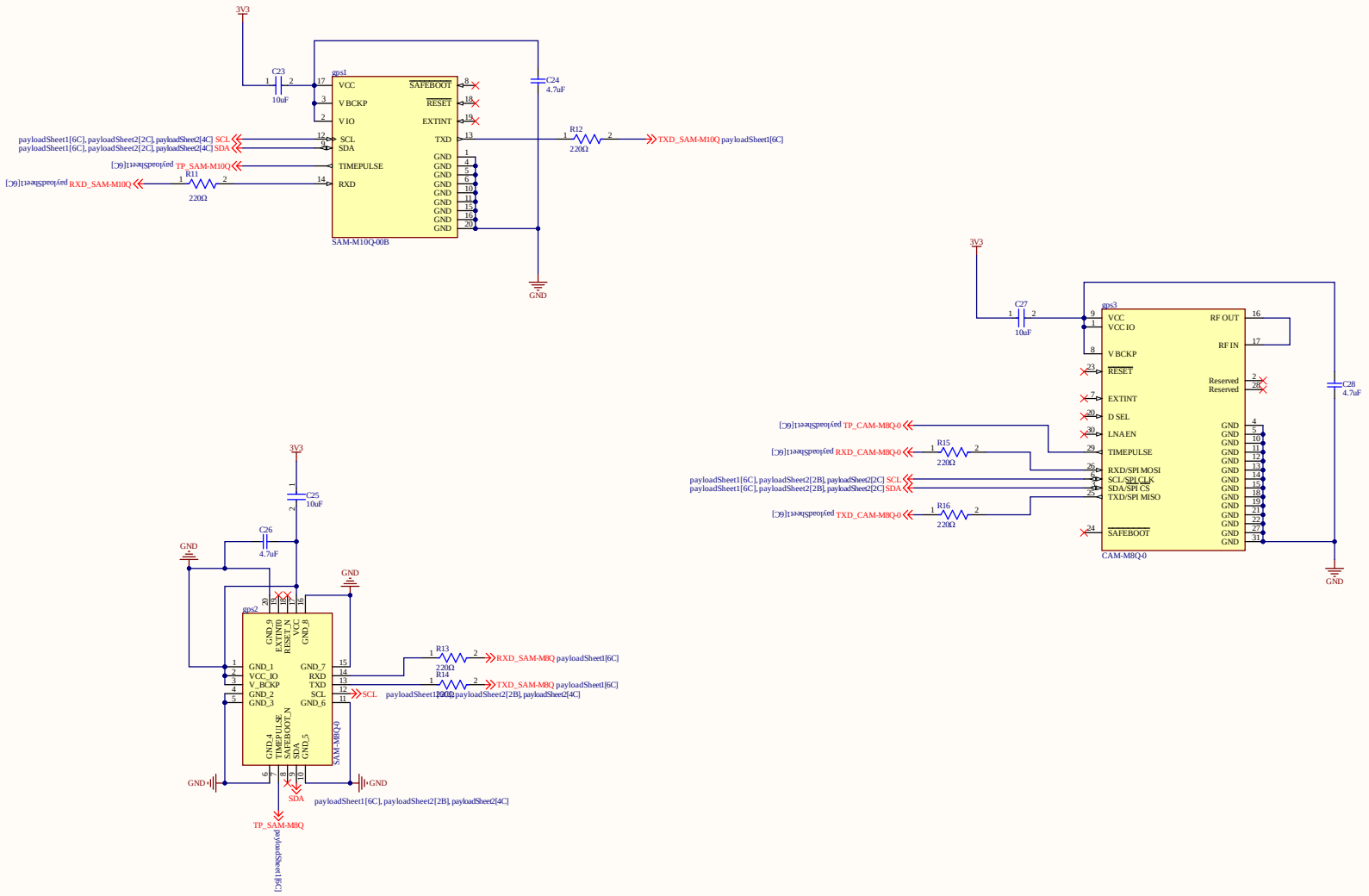

Title		
Size C	Number	Revision
Date: 3/01/2026	Sheet of	
File: C:\Users\..\payloadSheet2.SchDoc	Drawn By:	

COSMIAC
gps3
gps2
gps1
GPIO2
LED_2
LED_1
LED_3
LED_4
REG1
REG2
USB2
J2
J1
R13
R14
R16
R11
R12
C23
C24
C26
C28
C20
C21
C22
C19
D1

Board Stack Report