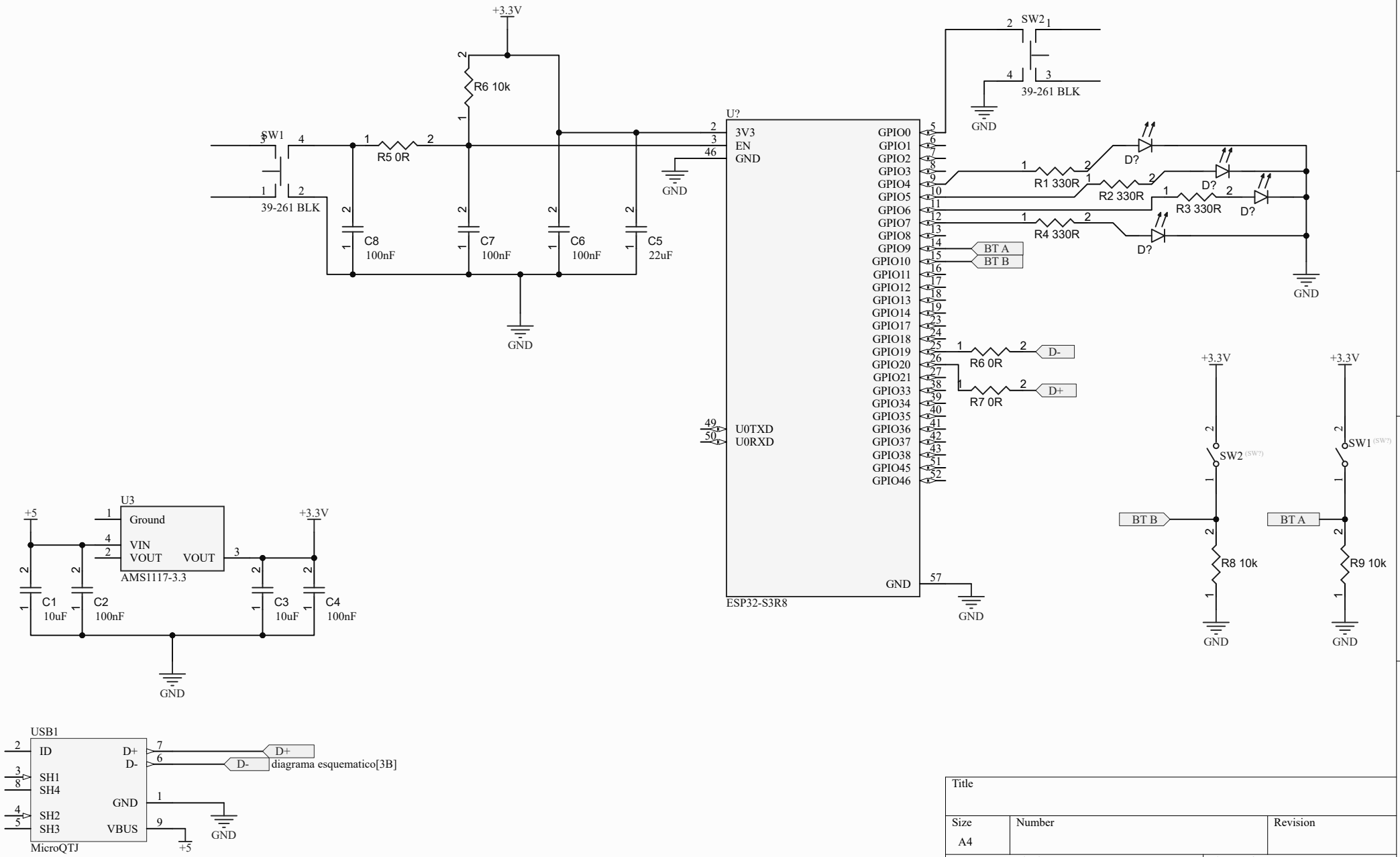

Title		
Size A4	Number	Revision
Date: 10/09/2025	Sheet of	
File: C:\Users\..\diagrama esquematico.SchDoc	Drawn By:	