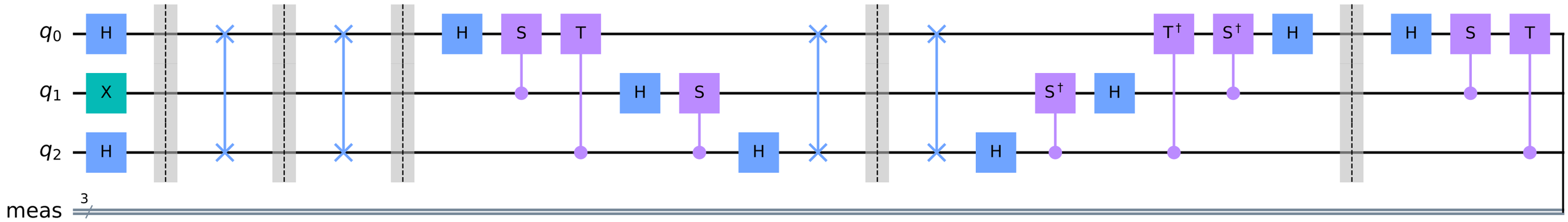
q0
q1
q2
meas
3
H
X
H
H
S
T
H
S
H
H
S†
H
T†
S†
H
H
S
T

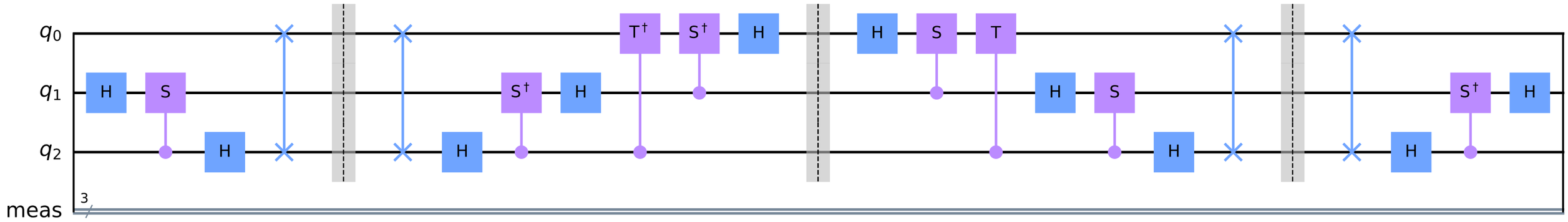
q0
q1
q2
meas
3
H
S
H
H
S†
H
T†
S†
H
H
S
T
H
S
H
S†
H

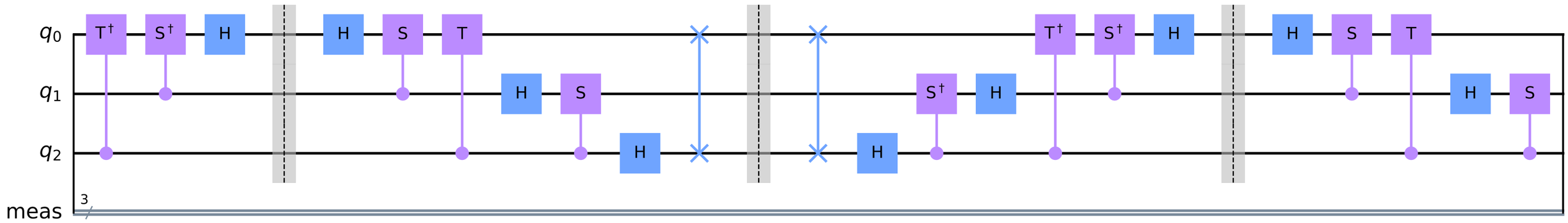
q0
q1
q2
meas
3
T†
S†
H
H
S
T
H
S
H
H
S†
H
T†
S†
H
H
S
T
H
S

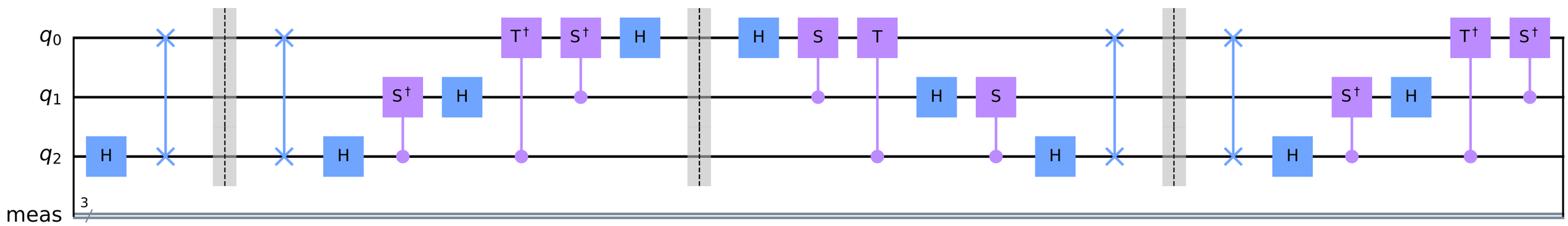
q0
q1
q2
meas
3
H
H
S†
H
T†
S†
H
H
S
T
H
S
H
S†
H
T†
S†

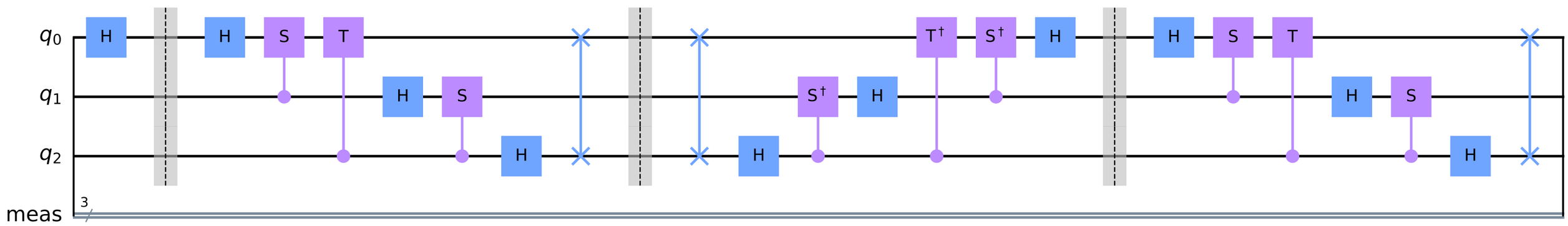
q0
q1
q2
meas
3
H
H
S
T
H
S
H
H
S†
H
T†
S†
H
H
S
T
H
S
H

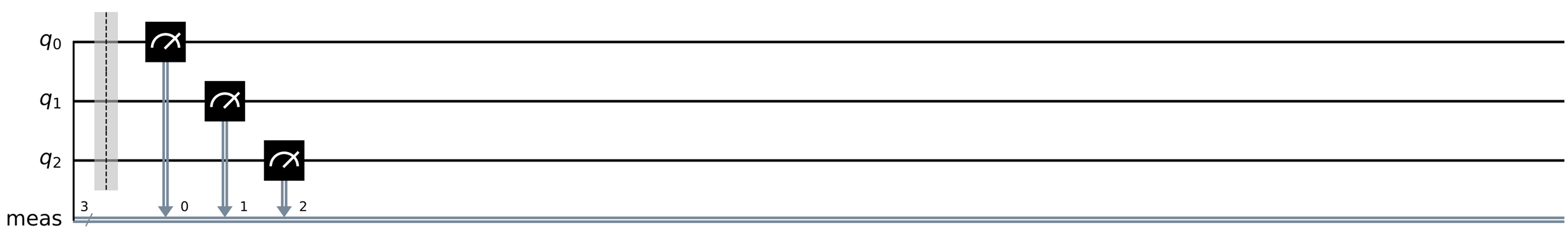
q0
q1
q2
meas
3
0
1
2