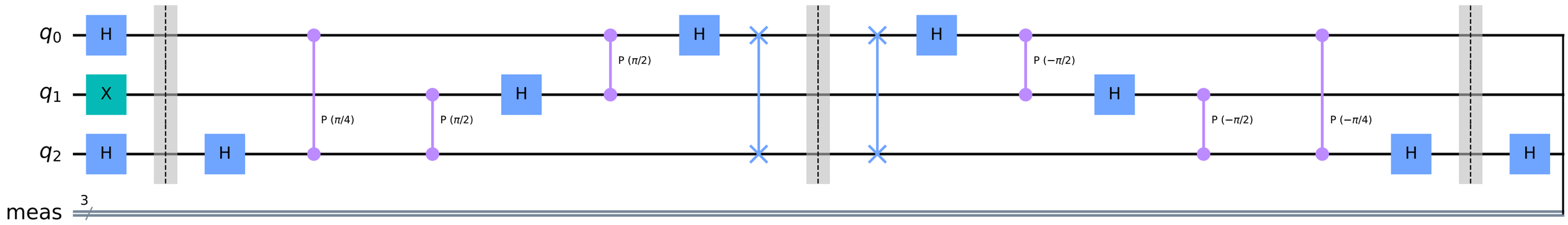
q0
q1
q2
meas
3
H
X
H
H
P (π/4)
P (π/2)
H
P (π/2)
H
H
P (−π/2)
H
P (−π/2)
P (−π/4)
H
H

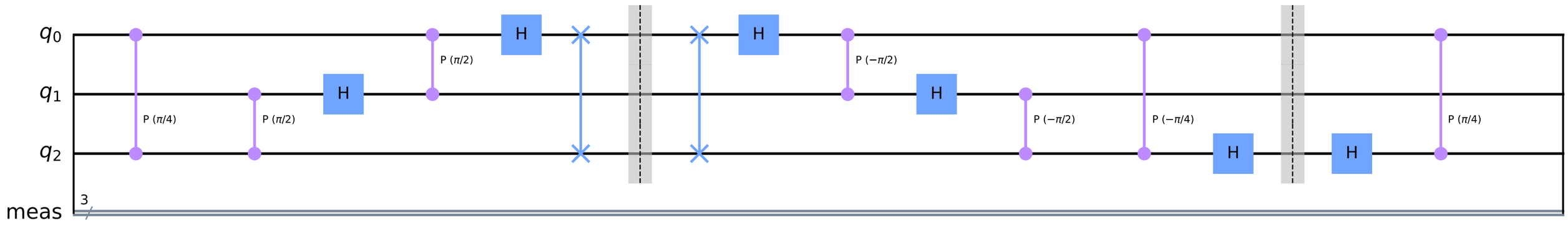
q0
q1
q2
meas
3
P (π/4)
P (π/2)
H
P (π/2)
H
H
H
P (−π/2)
H
P (−π/2)
P (−π/4)
H
H
P (π/4)

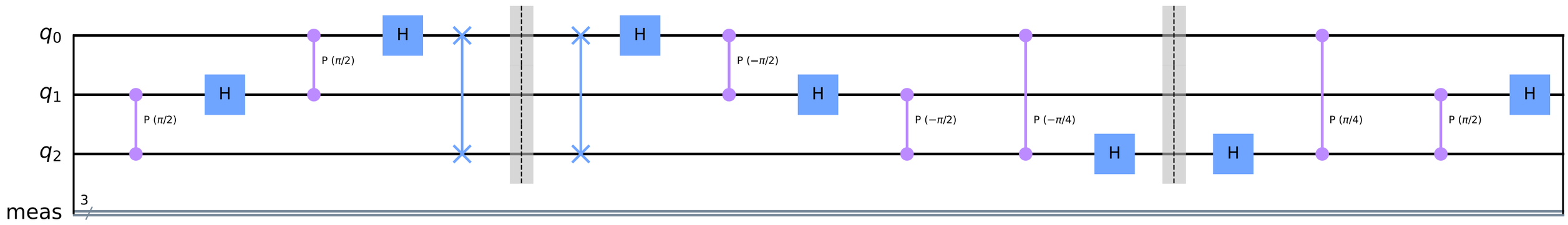
q0
q1
q2
meas
3
P (π/2)
H
P (π/2)
H
H
H
P (−π/2)
H
P (−π/2)
P (−π/4)
H
H
P (π/4)
P (π/2)
H

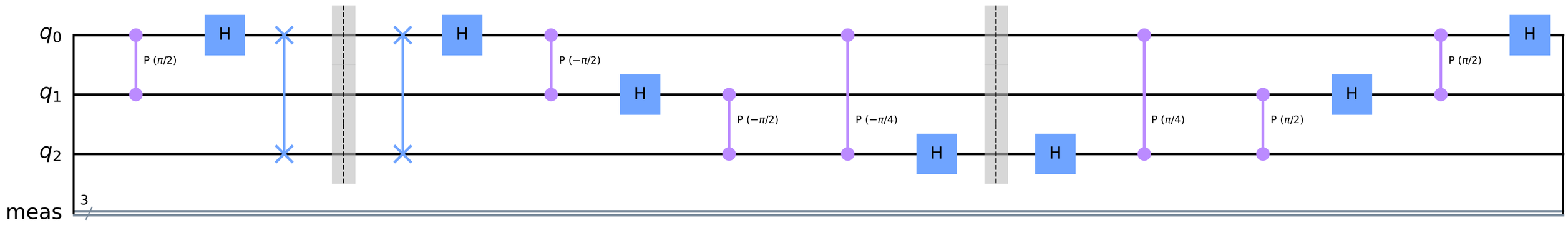
q0
q1
q2
meas
3
P (π/2)
H
H
P (−π/2)
H
P (−π/2)
P (−π/4)
H
H
P (π/4)
P (π/2)
H
P (π/2)
H

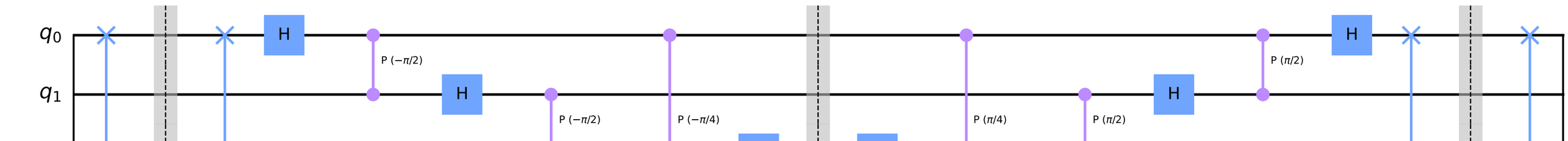
q0
q1
q2
meas
3
H
P (−π/2)
H
P (−π/2)
P (−π/4)
H
H
P (π/4)
P (π/2)
H
P (π/2)
H

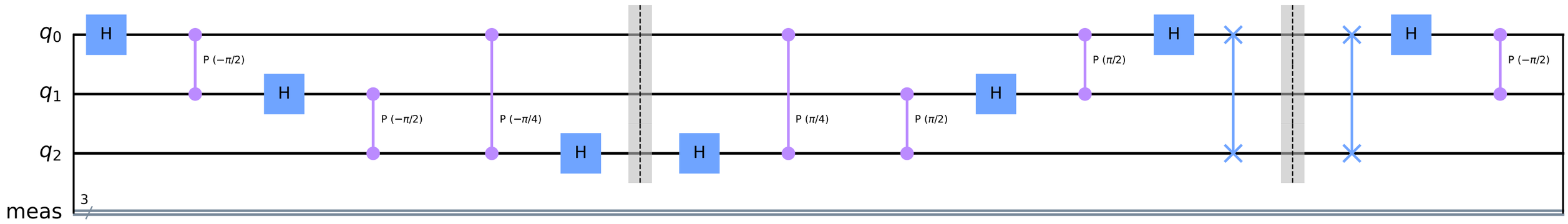
q0
q1
q2
meas
3
H
P (−π/2)
H
P (−π/2)
P (−π/4)
H
H
P (π/4)
P (π/2)
H
P (π/2)
H
H
P (−π/2)
H
H
P (π/2)
H
P (−π/2)

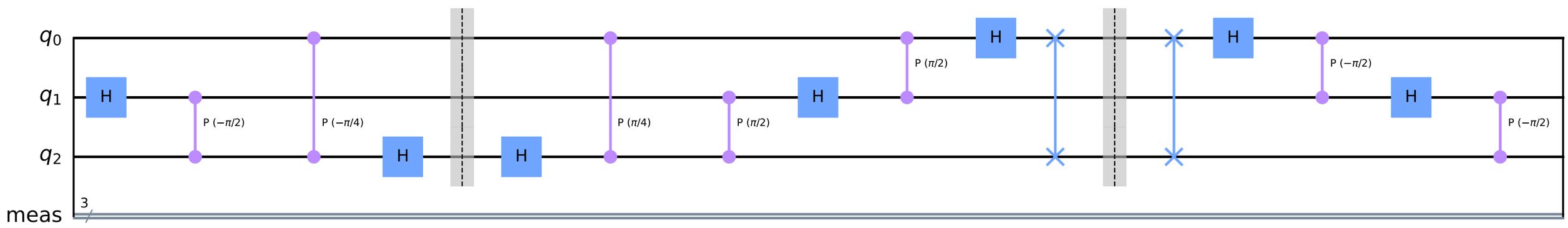
q0
q1
q2
meas
3
H
P (−π/2)
P (−π/4)
H
H
P (π/4)
P (π/2)
H
P (π/2)
H
H
P (−π/2)
H
P (−π/2)

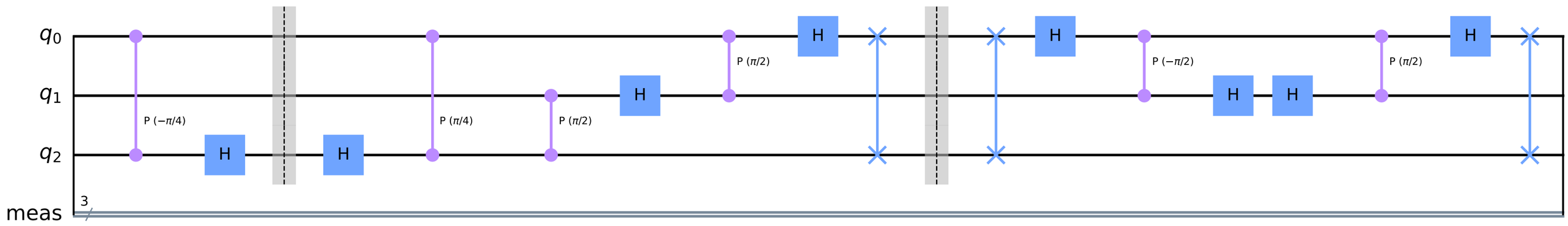
q0
q1
q2
meas
3
P (−π/4)
H
H
P (π/4)
P (π/2)
H
P (π/2)
H
H
P (−π/2)
H
H
P (π/2)
H

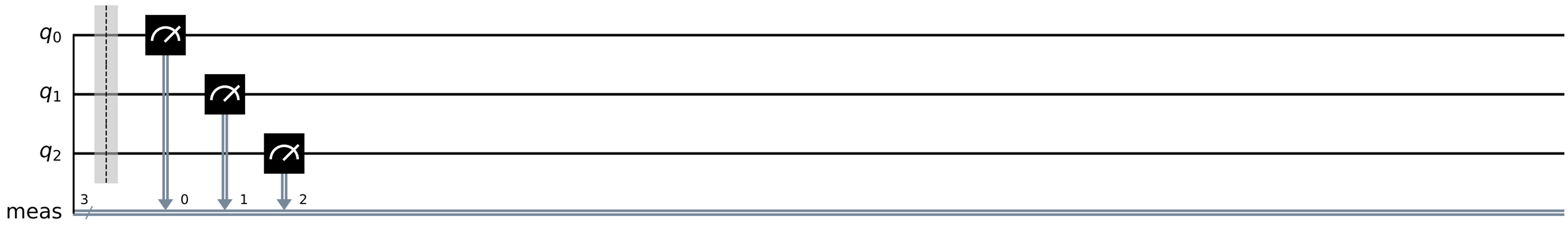
q0
q1
q2
meas
3
0
1
2