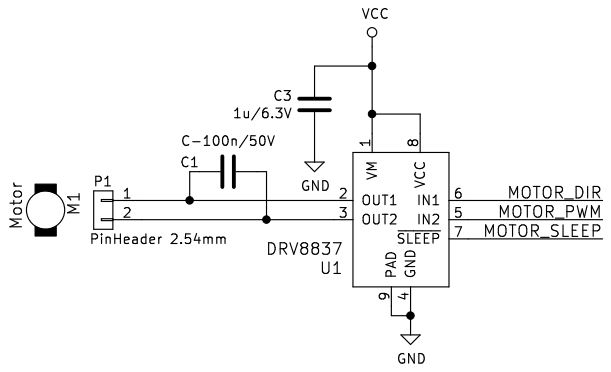

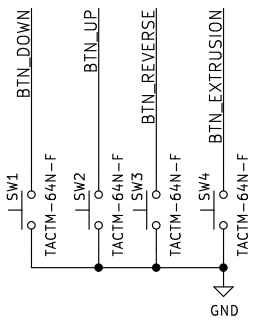

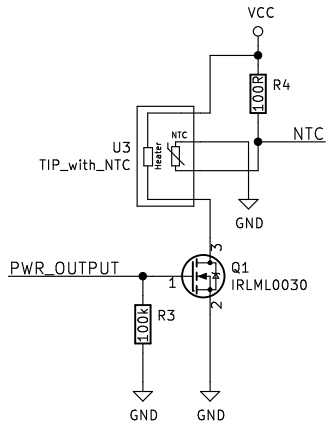

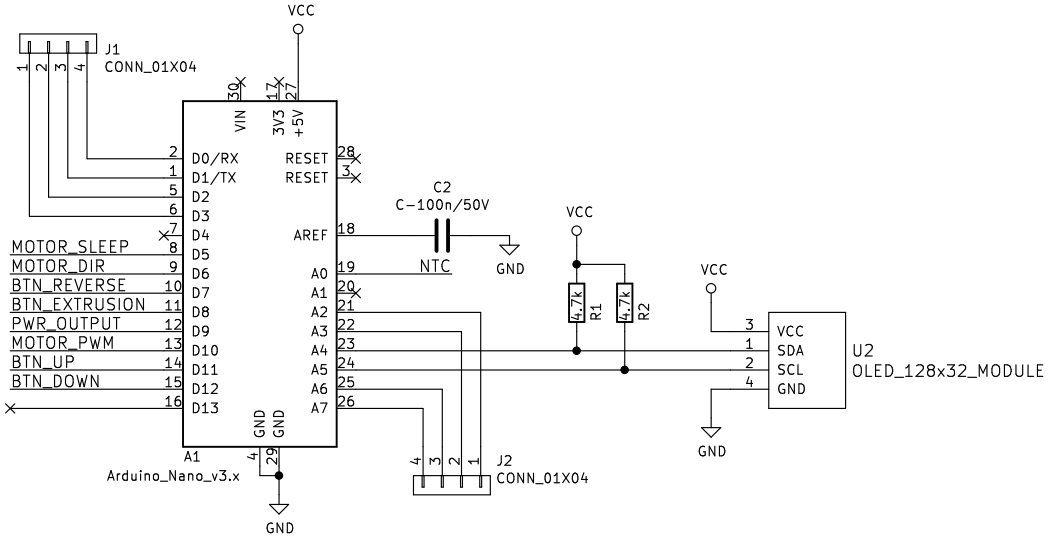

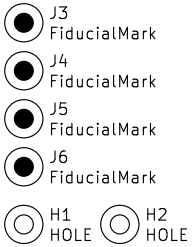

open source hardware

Sheet: /
File: 3dsimo_kit.sch

3D SIMO

Title: 3Dsimo Kit

Size: A4	Date: 2018-05-16	**Rev: 100A**
KiCad E.D.A. kicad no-vcs-found		Id: 1/1