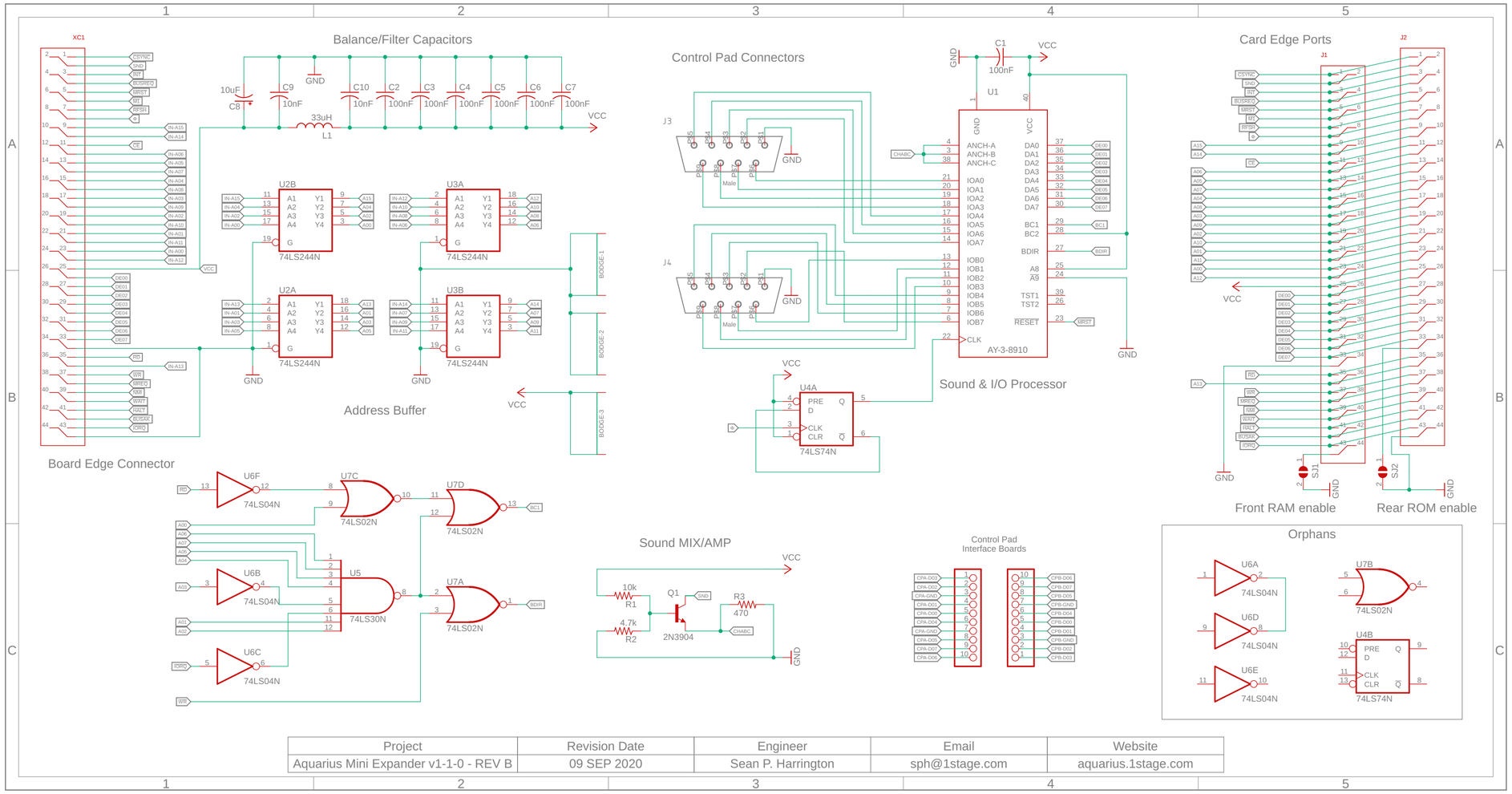

Project	Revision Date	Engineer	Email	Website
Aquarius Mini Expander v1-1-0 - REV B	09 SEP 2020	Sean P. Harrington	sph@1stage.com	aquarius.1stage.com