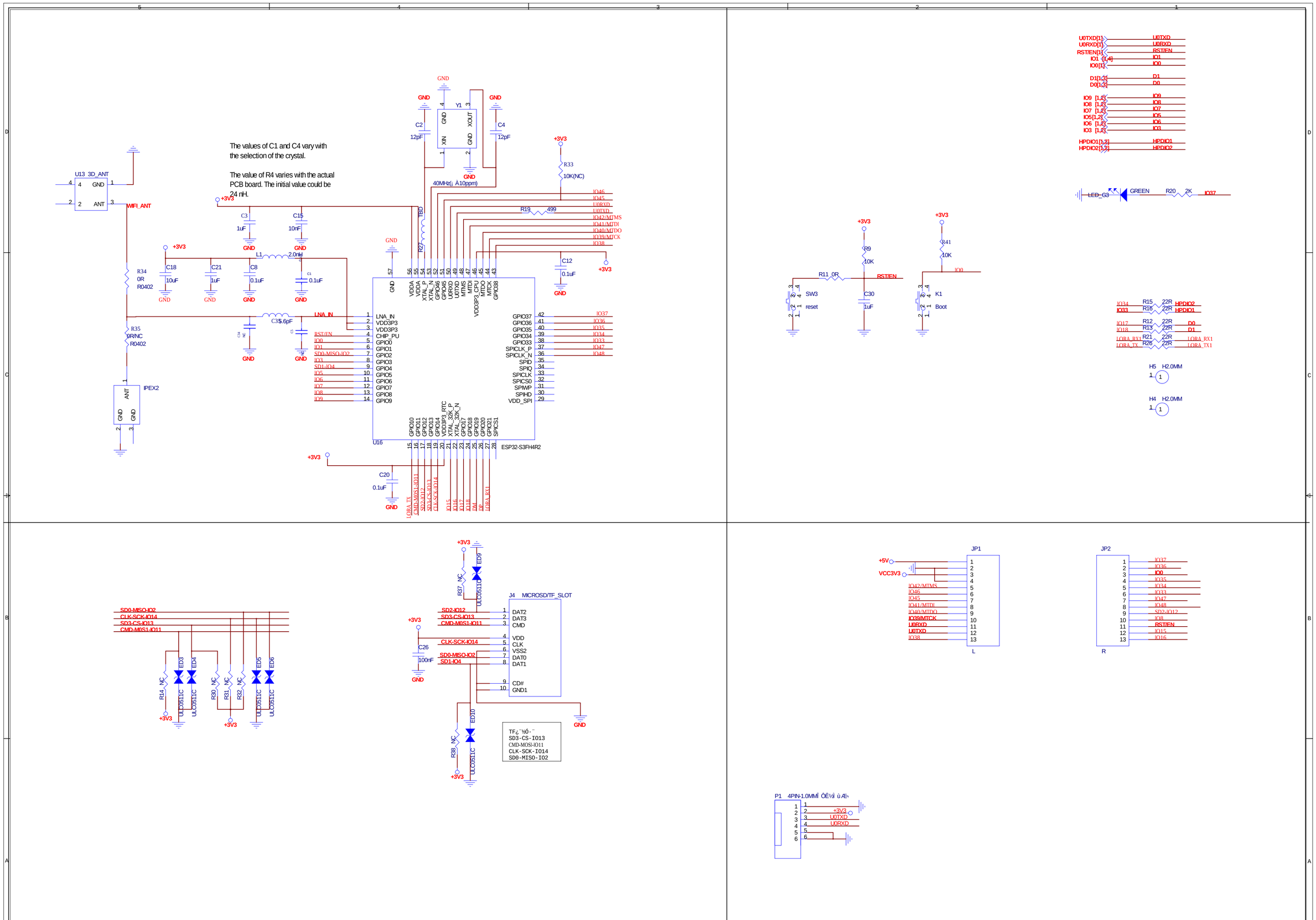

Title	T3S3_V1.1
Size	C
Document Number	ESP32-S3FH4R2
Rev	V1.0
Date:	Friday, January 3, 2020
Sheet	1 of 4

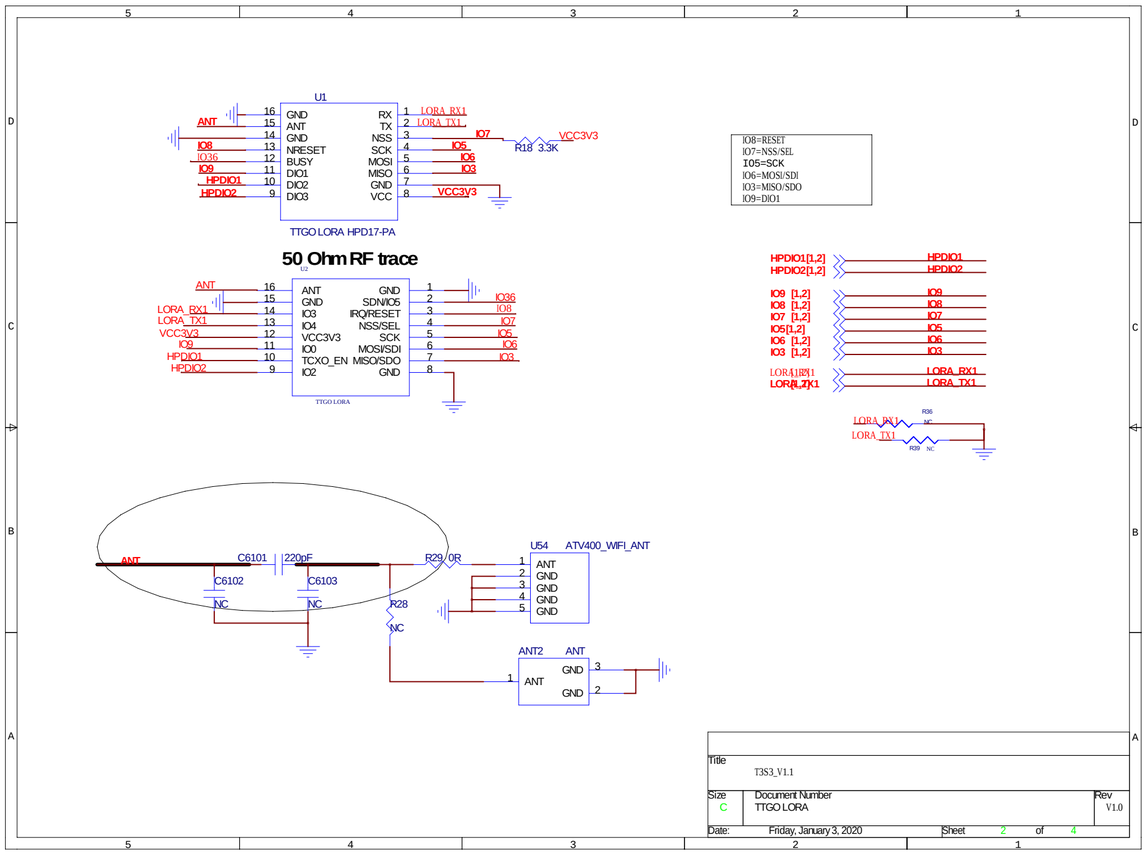

Title	T3S3_V1.1
Size	C
Document Number	TTGO LORA
Rev	V1.0
Date:	Friday, January 3, 2020
Sheet	2 of 4

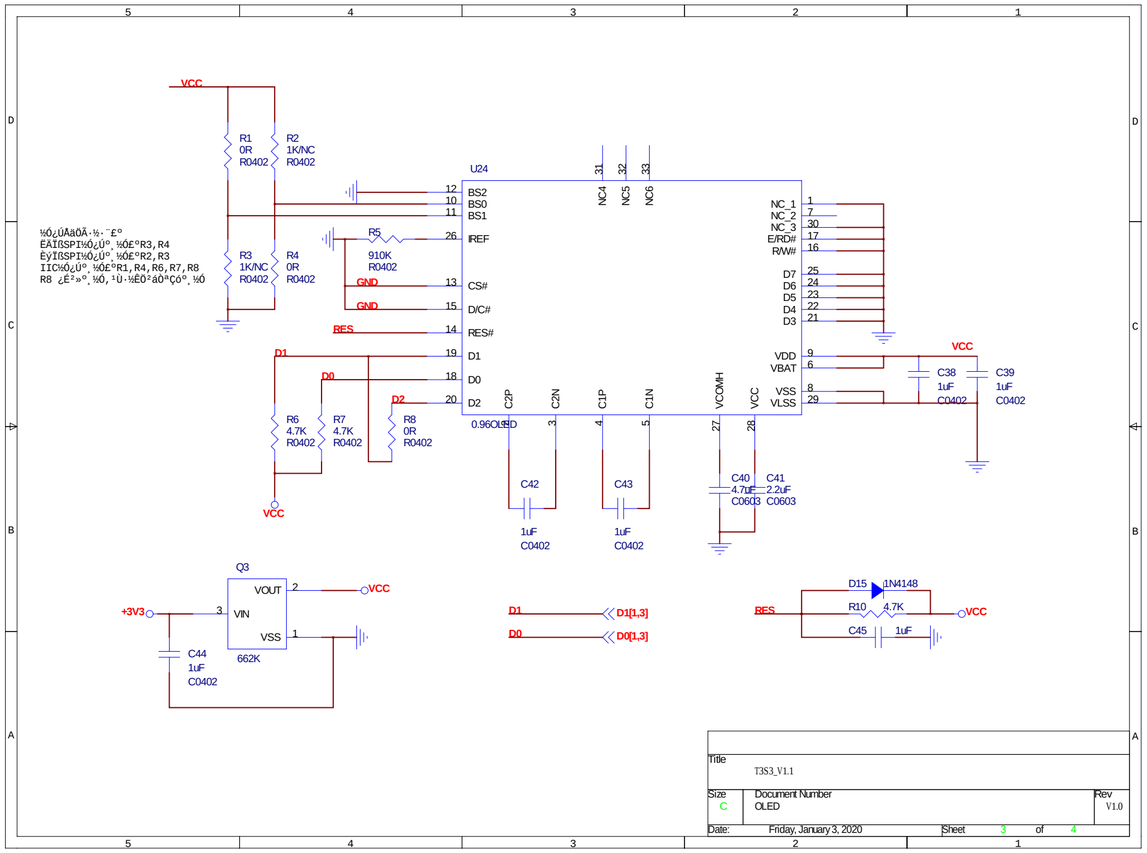
VCC
R1 0R R0402
R2 1K/NC R0402
R3 1K/NC R0402
R4 0R R0402
R5 910K R0402
GND
RES
D1
D0
D2
R6 4.7K R0402
R7 4.7K R0402
R8 0R R0402
U24
0.96OLED
BS2
BS0
BS1
IREF
CS#
D/C#
RES#
D1
D0
D2
NC_1
NC_2
NC_3
E/RD#
R/W#
D7
D6
D5
D4
D3
VDD
VBAT
VSS
VLSS
NC4
NC5
NC6
C2P
C2N
C1P
C1N
VCOMH
VCC
C38 1uF C0402
C39 1uF C0402
C42 1uF C0402
C43 1uF C0402
C40 4.7uF C0603
C41 2.2uF C0603
Q3
VOUT
VIN
VSS
662K
+3V3
C44 1uF C0402
D1[1,3]
D0[1,3]
D15 1N4148
R10 4.7K
C45 1uF
Title
T3S3_V1.1
Size C
Document Number
OLED
Rev V1.0
Date: Friday, January 3, 2020
Sheet 3 of 4

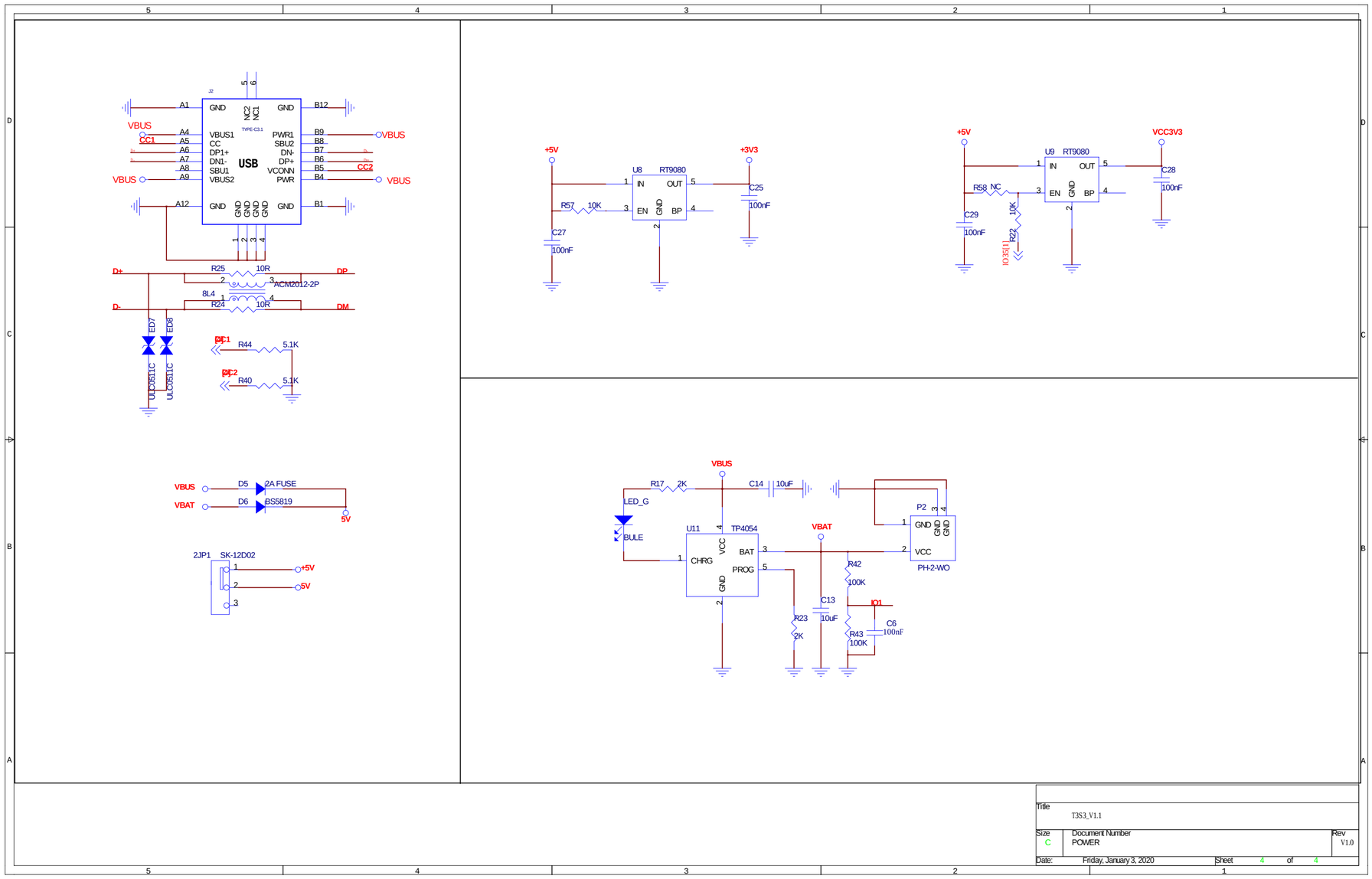

Title	T3S3_V1.1		
Size C	Document Number POWER		Rev V1.0
Date: Friday, January 3, 2020		Sheet 4 of 4	