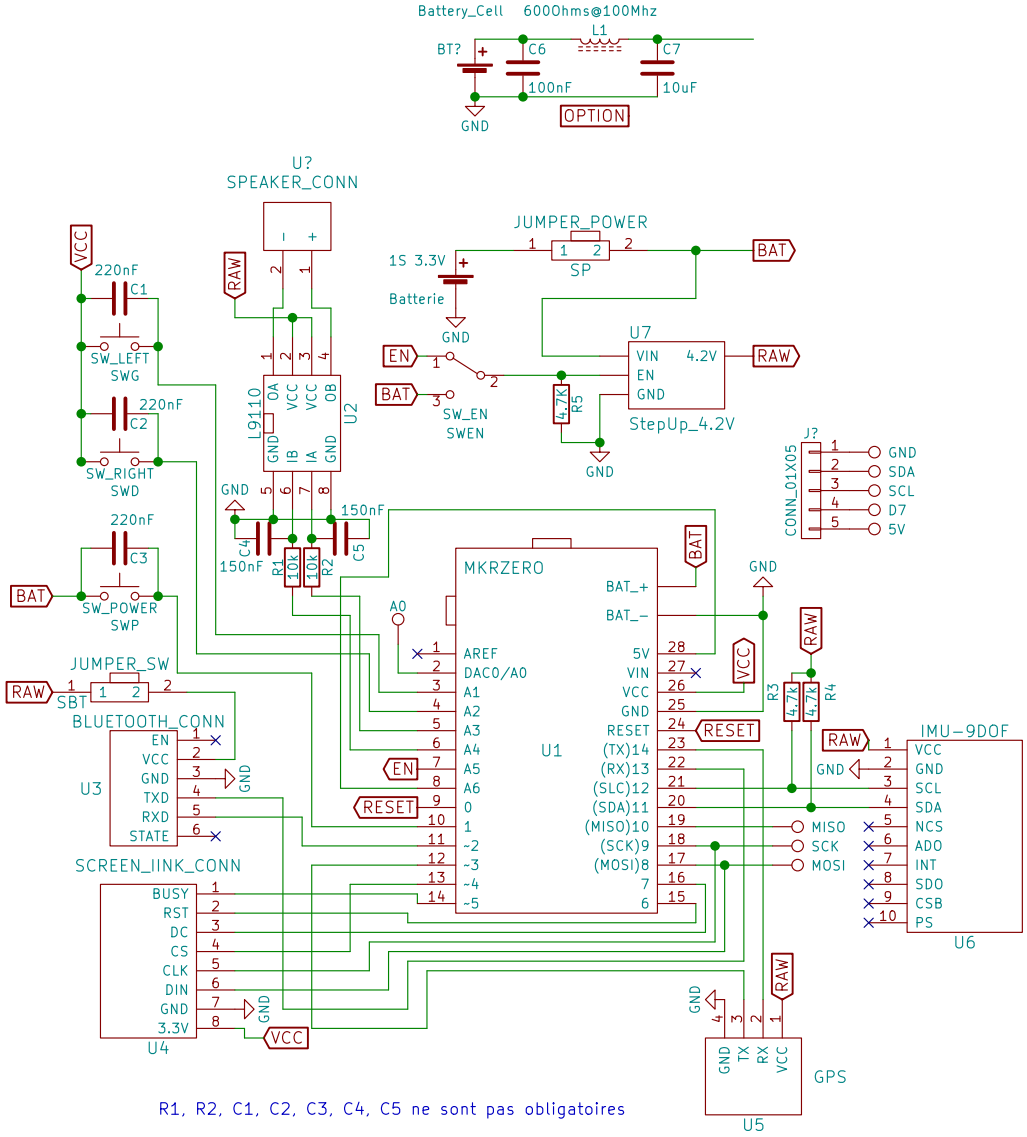

Sheet: /
File: variometer.sch

Title: Variometer

Size: A4	Date: 2017−11−15	**Rev: V2**
KiCad E.D.A. eeschema 4.0.6		Id: 1/1