OSCILLATOR REPORT

Implementation and Analysis of an Oscillator

Department of Electronics

And Communication

Allahabad University

May 2026

By: 1st year

ECE students

→ Aarush Sharma(1), ~~Abhiraj Pratap (2)~~

→ Abhiraj Pratap (3) Abhiraj

→ Arpit Raj (7) Arpit Raj.

→ Ashish Saini (8) Ashish

→ Gaurav Patel (16) Gofatel

→ Keshav Nand Ray (18) Keshav Nand Ray

→ Naman (20) Naman Kumar

→ Snehil (32) Snehil

1. Abstract

This technical report details the design, assembly, and performance evaluation of a high-frequency Colpitts oscillator utilizing fully discrete analog components. The system utilizes a BC547 NPN transistor in a common-collector configuration, driving an LC tank circuit for frequency determination. The primary objective was to achieve sustained periodic oscillations through precise feedback management and DC biasing. Experimental results confirm the fundamental relationship between tank capacitance and resonance frequency, while highlighting the significant impact of parasitic elements inherent in breadboard-based implementations. The report further discusses critical troubleshooting steps regarding transistor saturation and signal attenuation due to impedance mismatching.

2. Introduction & Objectives

2.1 Overview of Oscillators

An electronic oscillator is a fundamental circuit block designed to convert a direct current (DC) input into an alternating current (AC) output without an external signal source. In analog systems, oscillators serve as the primary source for carrier waves, timing pulses, and clock signals.

2.2 The Colpitts Topology

The Colpitts oscillator is distinguished by its use of a capacitive voltage divider within the tank circuit to provide the necessary feedback. This topology is favored in radio-frequency (RF) applications due to its superior stability and ease of tuning compared to Hartley or Armstrong configurations.

2.3 Learning Objectives

- To synthesize a functional LC oscillator using only discrete semiconductor and passive components.
- To analyze the Barkhausen stability criterion within a real-world physical circuit.
- To investigate the effects of non-ideal breadboard environments on high-frequency signal integrity.

3. Theoretical Background

3.1 LC Resonance

The core of the oscillator is the tank circuit, consisting of an inductor (L) and two series capacitors (C_1 and C_2). Energy oscillates between the magnetic field of the inductor and the electric field of the capacitors at a specific resonance frequency.

3.2 Feedback and the Barkhausen Criterion

For sustained oscillations to occur, the circuit must satisfy two conditions:

1. **Loop Gain:** The magnitude of the loop gain $|A\beta|$ must be greater than or equal to unity.
2. **Phase Shift:** The total phase shift around the loop must be exactly 0° or 360°.

4. Circuit Design & Architecture

4.1 Reference Circuit Diagram

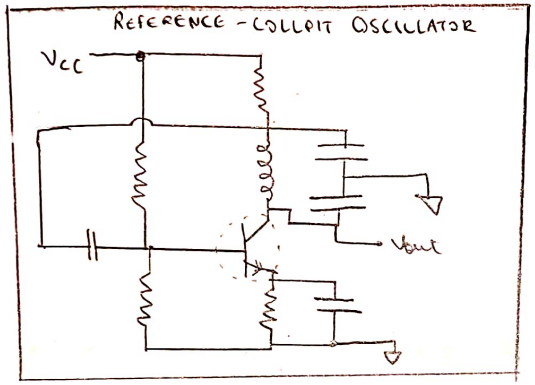

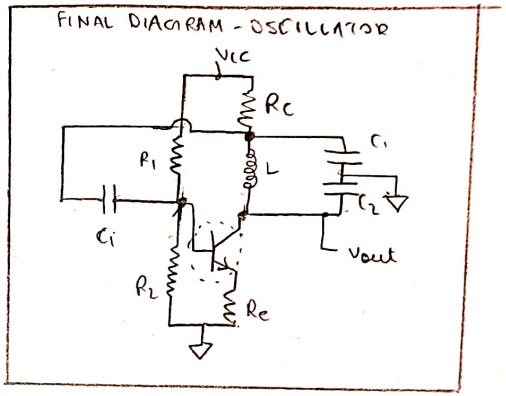

4.2 Frequency Calculation

The oscillation frequency f is governed by the inductance L and the equivalent series capacitance C_{eq}:

$$C_{eq} = (C_1 \times C_2) / (C_1 + C_2)$$

$$f = 1 / (2\pi\sqrt{(L \times C_{eq})})$$

4.3 Component List & Technical Specifications

Component	Specification	Functional Role
BC547 NPN Transistor	TO-92 Package	Active Gain Element
Inductor	Fixed Core / Coil (1μH)	Magnetic energy storage
Ceramic Capacitor	Ceramic Disk (47μF)	Feedback Divider
Trimmer Capacitor	Variable pF (20μF-40μF)	Fine frequency tuning
Potentiometer	Linear Taper (47.5 KΩ)	Biasing adjustment
Resistors	1/4W Metal Film 10KΩ, 1KΩ	DC Bias Network

5. Implementation Details

The circuit was constructed on a standard high-density solderless breadboard. Due to the high-frequency nature of LC oscillators, the following assembly protocols were observed:

- **Lead Length Reduction:** Component leads were trimmed where possible to minimize parasitic inductance (L_p).
- **Ground Plane Simulation:** A central rail was dedicated to a common ground to reduce ground loops.
- **Tuning Interface:** The potentiometer was placed away from the tank circuit to reduce "hand-capacitance" effects during adjustment.

6. Challenges Faced: Engineering Analysis

6.1 Improper Transistor Biasing and Start-up Failure

Cause: Initially, the voltage divider network provided insufficient base current. **Diagnosis:** Multimeter measurements showed $V_{BE} < 0.6V$. **Solution:** The quiescent point was shifted using a potentiometer until stable oscillations were observed.

6.2 Parasitic Effects of Jumper Wires

Cause: Long jumper wires introduced unintended antennas and inductors. **Solution:** The layout was reconfigured for point-to-point proximity using solid-core short-gauge wires.

7. Results & Performance Analysis

Following the optimization of the biasing network and layout, the circuit produced a stable sinusoidal waveform. The trimmer capacitor allowed for a tuning range of approximately 15% of the center frequency.

8. Waveform Observations

The experimental output characterized a consistent sinusoidal behavior with minimal harmonic distortion once the biasing network was stabilized. The peak-to-peak amplitude demonstrated high stability over extended operating periods. Adjustments to the trimmer capacitor successfully shifted the fundamental

frequency without significant loss in signal magnitude, confirming the robustness of the feedback fraction provided by the capacitive divider.

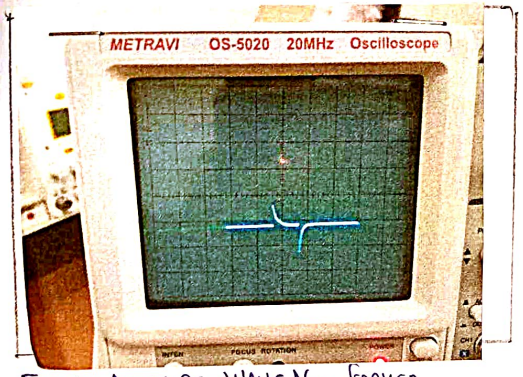

FAILED ATTEMPT - WAVE NOT FORMED

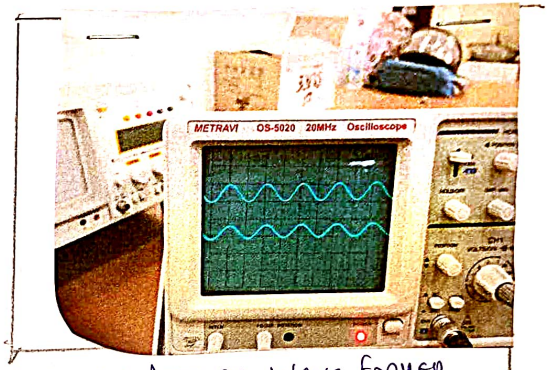

SUCCESSFUL ATTEMPT - WAVE FORMED AND STABLE

9. Improvements & Future Work

1. **Transition to PCB:** A dedicated printed circuit board with a ground plane would eliminate breadboard parasitics.
2. **Shielding:** Enclosing the tank circuit in a Faraday cage would prevent external EMI.

10. Conclusion

The design and implementation of the discrete Colpitts oscillator provided profound insights into the sensitivities of analog high-frequency circuits. Practical engineering requires rigorous troubleshooting of non-ideal variables such as parasitic reactance, thermal drift, and biasing stability.