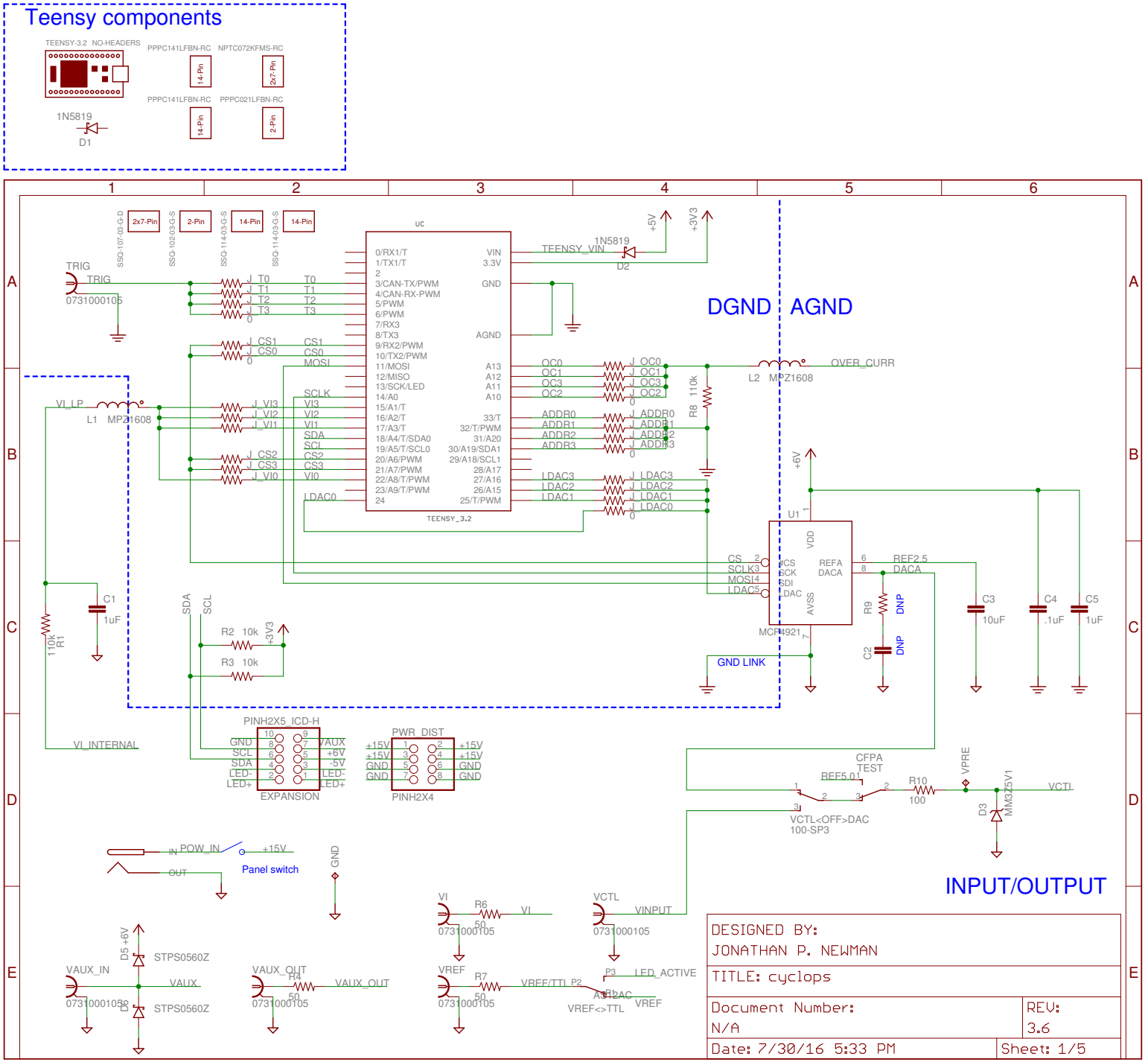

7/30/16 5:33 PM f=0.72 /home/jon/public/cyclops/cyclops/pcb/cyclops.sch (Sheet: 1/5)

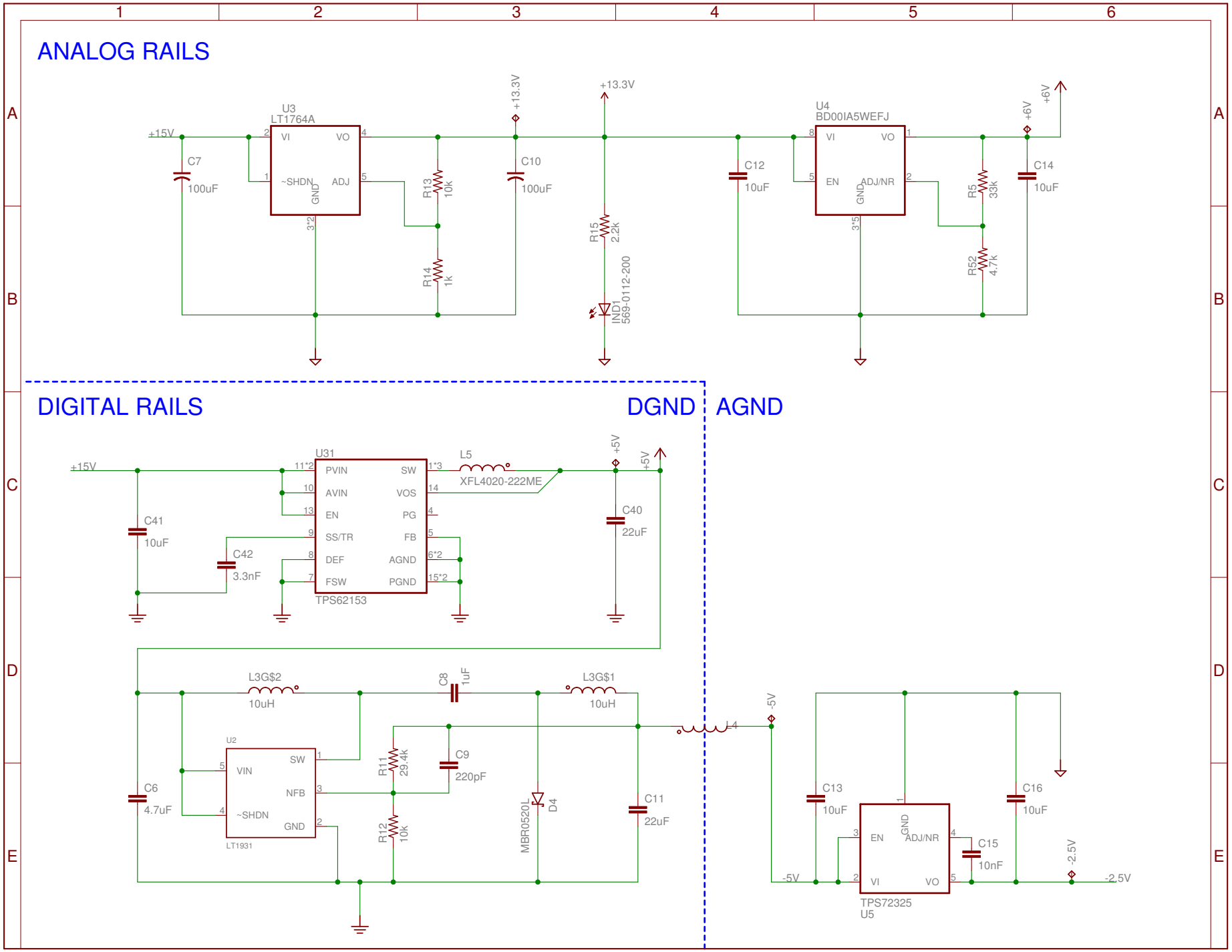
ANALOG RAILS
U3
LT1764A
±15V
C7
100uF
VI
VO
~SHDN
ADJ
GND
R13
10k
R14
1k
+13.3V
C10
100uF
R15
2.2k
IND1
569-0112-200
U4
BD00IA5WEFJ
C12
10uF
EN
ADJ/NR
R5
33k
R52
4.7k
+6V
C14
10uF
DIGITAL RAILS
DGND
AGND
U31
TPS62153
PVIN
SW
AVIN
VOS
EN
PG
SS/TR
FB
DEF
AGND
FSW
PGND
L5
XFL4020-222ME
C41
10uF
C42
3.3nF
+5V
C40
22uF
L3G$2
10uH
C8
1uF
L3G$1
10uH
U2
LT1931
VIN
SW
NFB
~SHDN
GND
C6
4.7uF
R11
29.4k
R12
10k
C9
220pF
MBR0520L
D4
C11
22uF
L4
-5V
C13
10uF
C16
10uF
C15
10nF
-2.5V
TPS72325
U5

OVERCURRENT

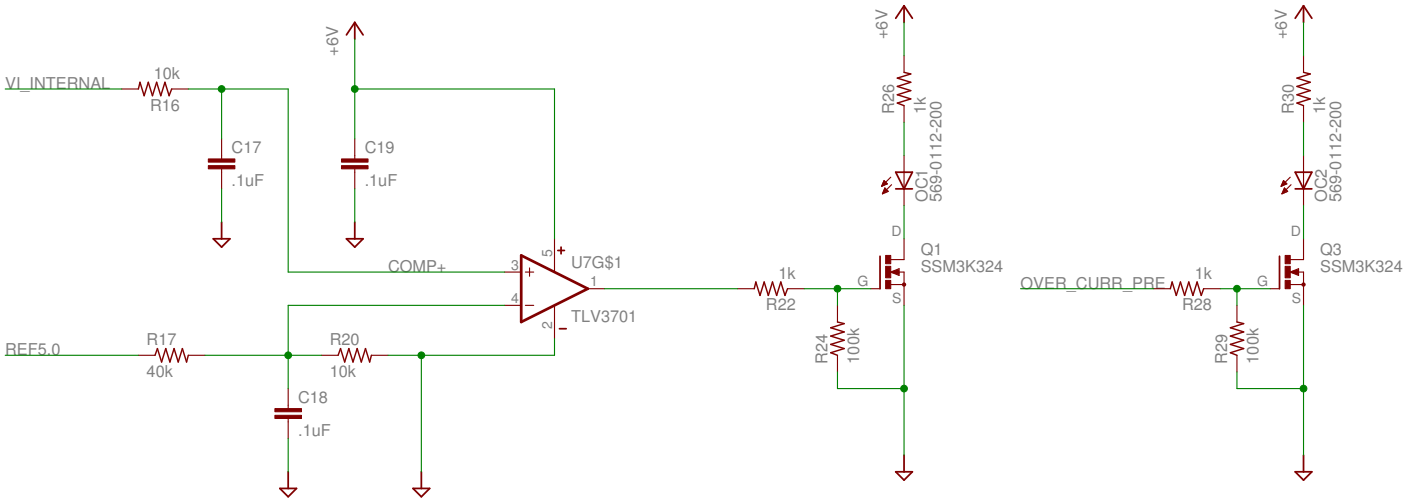

LED ACTIVE (I_LED >10 mA)

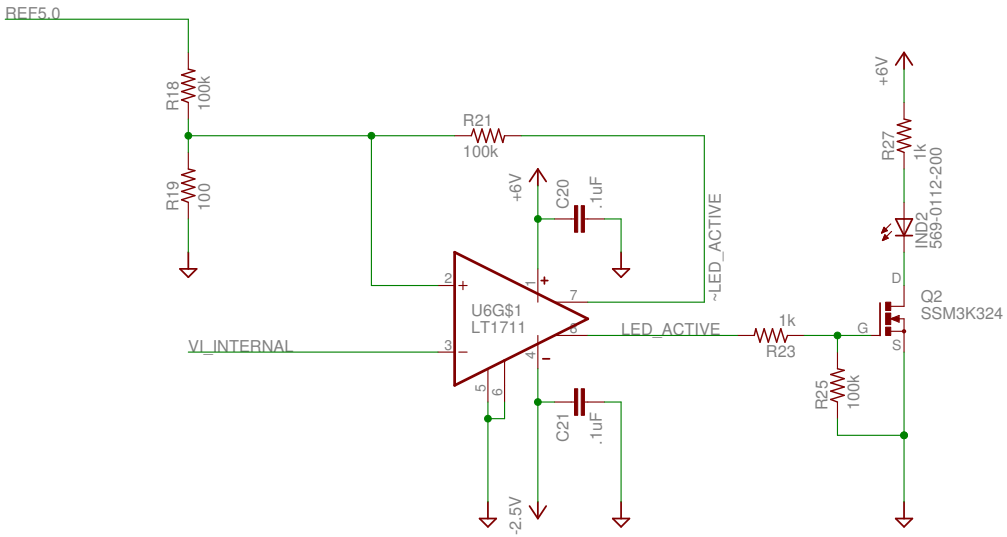

VOLTAGE REFERENCES

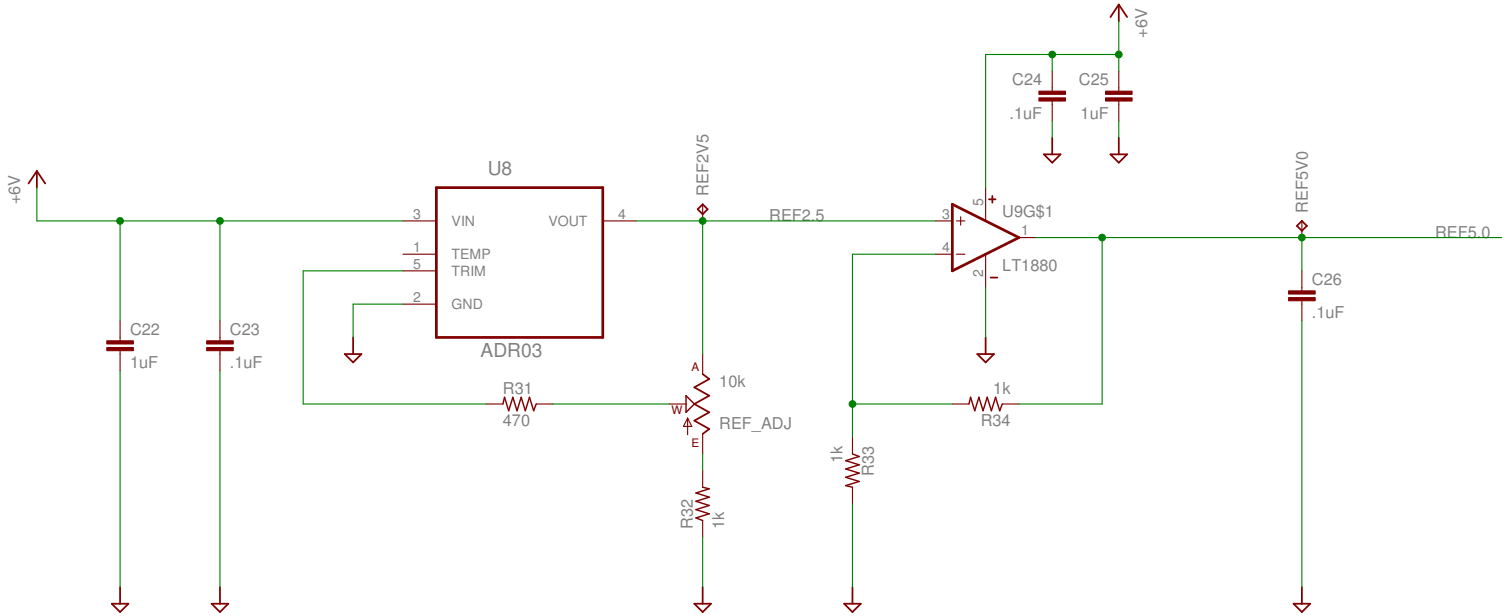

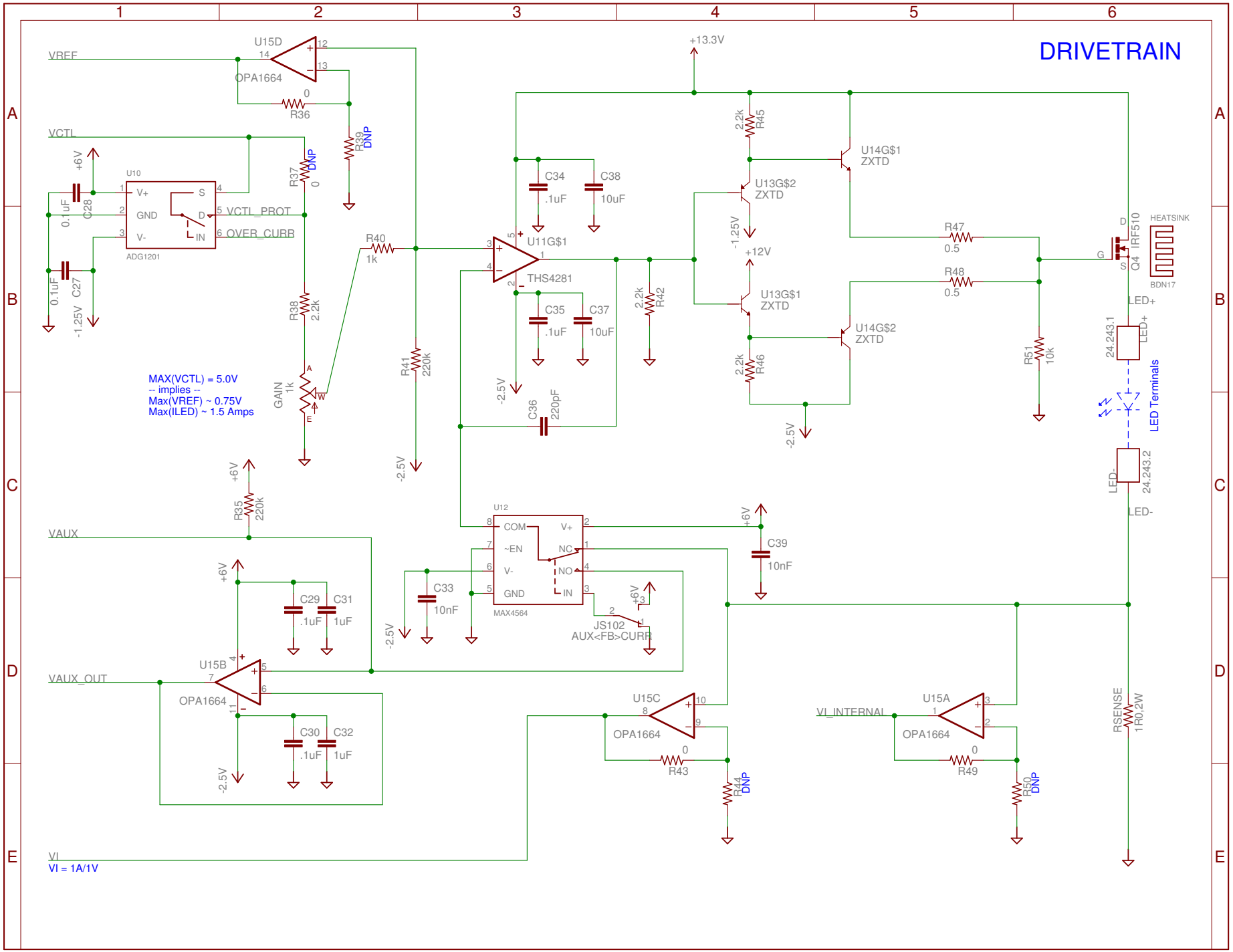

7/30/16 5:33 PM f=0.87 /home/jon/public/cyclops/cyclops/pcb/cyclops.sch (Sheet: 5/5)