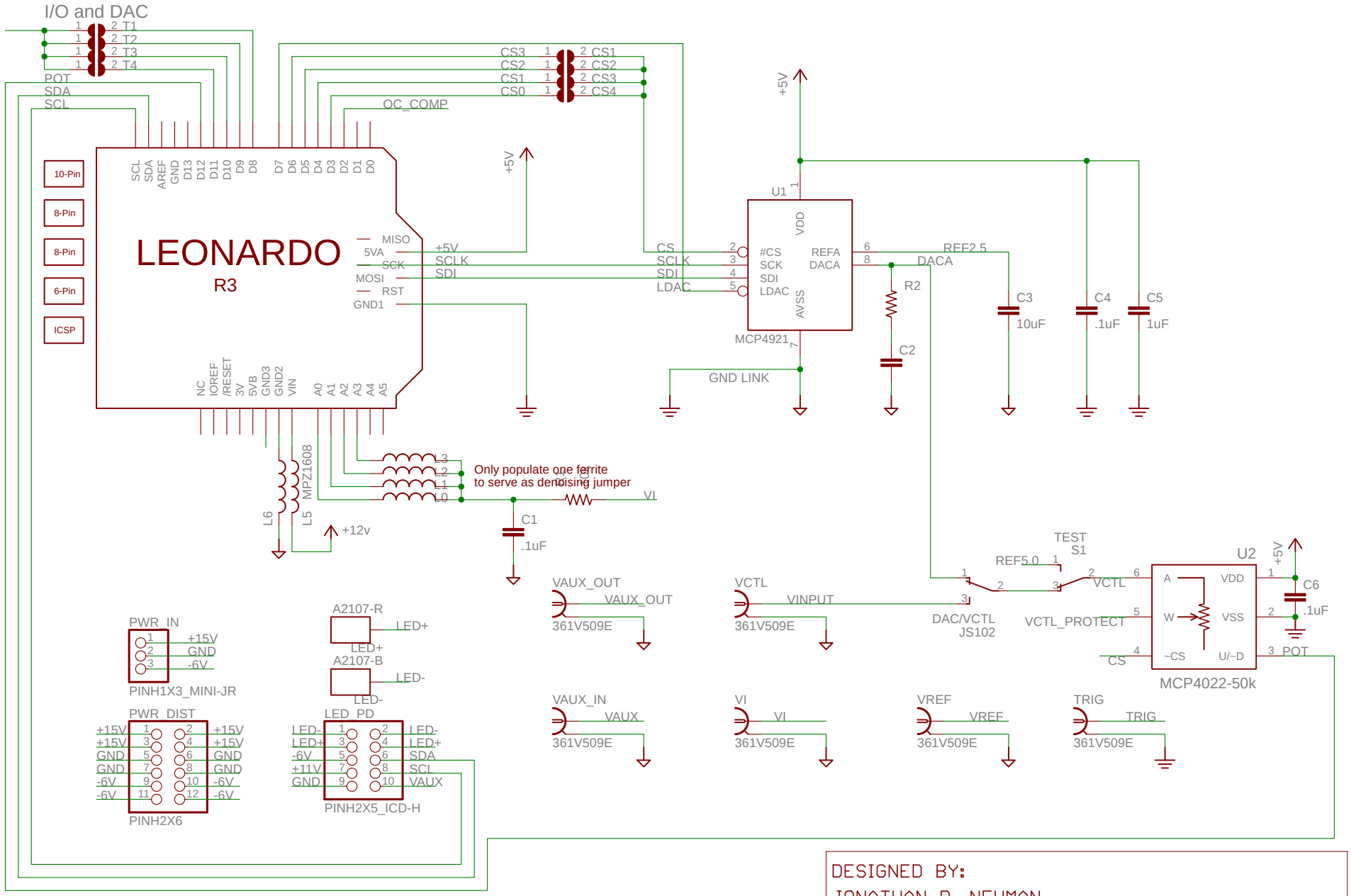

DESIGNED BY:
JONATHAN P. NEWMAN

TITLE: cyclops_r3

Document Number:	REV:
N/A	3.3
Date: 9/4/2014 11:16:51 AM	Sheet: 1/4