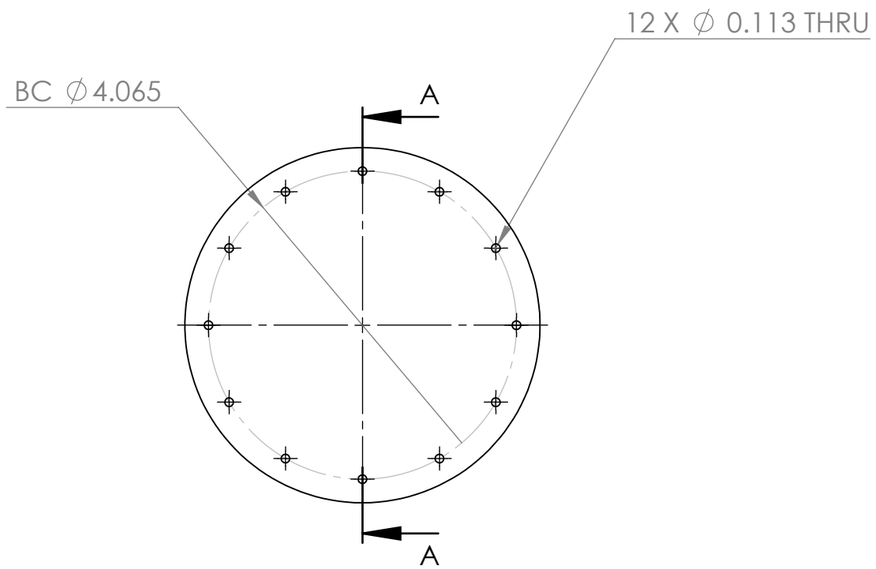


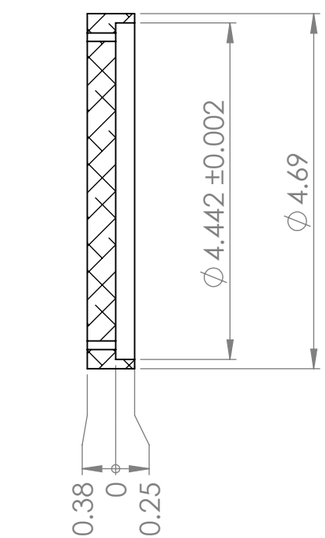


SECTION A-A

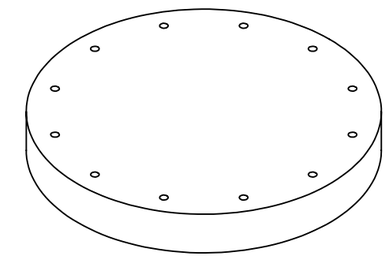

**PROPRIETARY AND CONFIDENTIAL**

THE INFORMATION CONTAINED IN THIS DRAWING IS THE SOLE PROPERTY OF <INSERT COMPANY NAME HERE>. ANY REPRODUCTION IN PART OR AS A WHOLE WITHOUT THE WRITTEN PERMISSION OF <INSERT COMPANY NAME HERE> IS PROHIBITED.

| NEXT ASSY | USED ON |
|---|---|
| APPLICATION | |

UNLESS OTHERWISE SPECIFIED:

DIMENSIONS ARE IN INCHES
TOLERANCES: .01
FRACTIONAL ±
ANGULAR: MACH ± BEND ±
TWO PLACE DECIMAL ±.01
THREE PLACE DECIMAL ±.005

INTERPRET GEOMETRIC TOLERANCING PER:

MATERIAL
7075 ALUMINUM

FINISH

DO NOT SCALE DRAWING

| | NAME | DATE |
|---|---|---|
| DRAWN | Z RABOIN | 2/11/20 |
| CHECKED | CNITSCHELM | 2/11/20 |
| ENG APPR. | | |
| MFG APPR. | | |
| Q.A. | | |

COMMENTS:

TITLE:
# CLOG PLATE

SIZE **B** | DWG. NO. Hydrostat Clog Plate | REV

SCALE: 1:2 | WEIGHT: | SHEET 1 OF 1