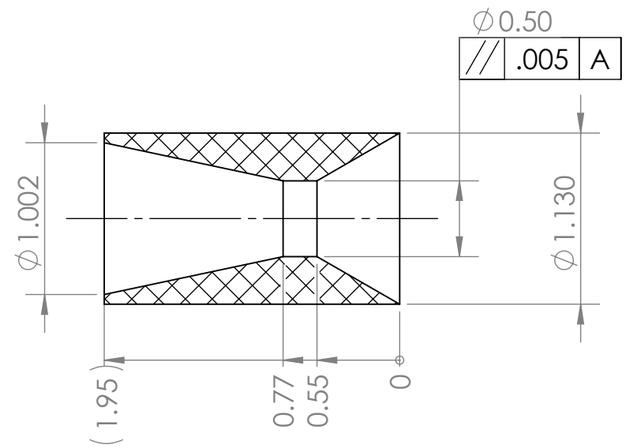

SECTION A-A

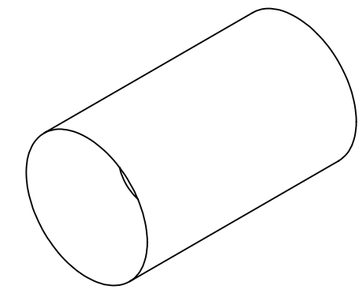

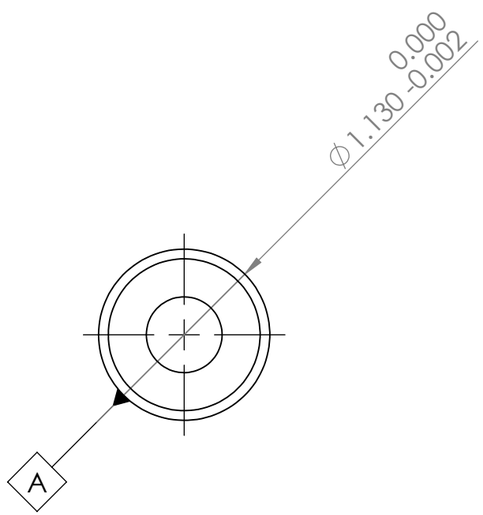

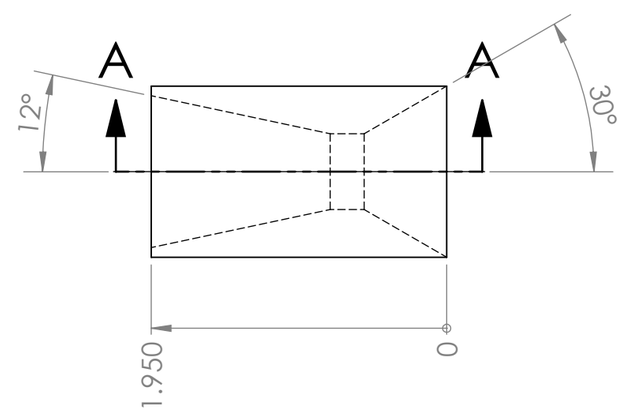

PROPRIETARY AND CONFIDENTIAL

THE INFORMATION CONTAINED IN THIS DRAWING IS THE SOLE PROPERTY OF <INSERT COMPANY NAME HERE>. ANY REPRODUCTION IN PART OR AS A WHOLE WITHOUT THE WRITTEN PERMISSION OF <INSERT COMPANY NAME HERE> IS PROHIBITED.

NEXT ASSY	USED ON
APPLICATION	

UNLESS OTHERWISE SPECIFIED:

DIMENSIONS ARE IN INCHES
TOLERANCES:
FRACTIONAL ±
ANGULAR: MACH ± BEND ±
TWO PLACE DECIMAL ± .05
THREE PLACE DECIMAL ± .005

INTERPRET GEOMETRIC TOLERANCING PER:

MATERIAL
GRAPHITE

FINISH
NA

DO NOT SCALE DRAWING

	NAME	DATE
DRAWN	Z RABOIN	12/13
CHECKED		12/13
ENG APPR.		
MFG APPR.		
Q.A.		

COMMENTS:

TITLE:
GRAPHITE INSERT

SIZE	DWG. NO.	REV
B	ThroatInsert	

SCALE: 1:1 WEIGHT: SHEET 1 OF 1

SOLIDWORKS Educational Product. For Instructional Use Only.