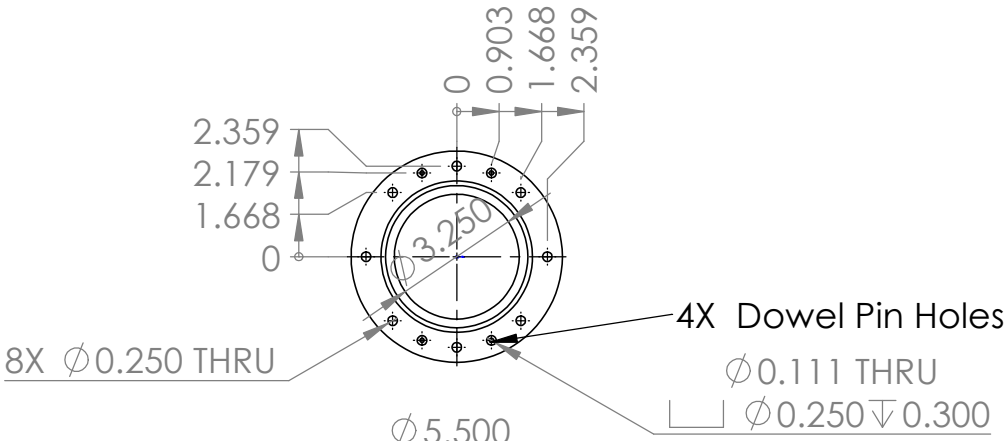

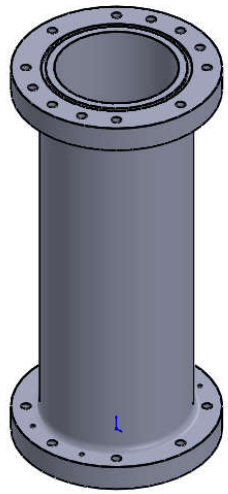

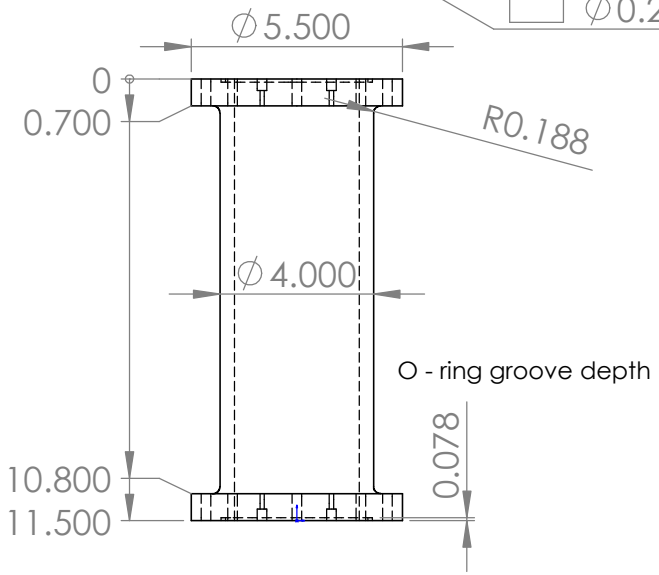

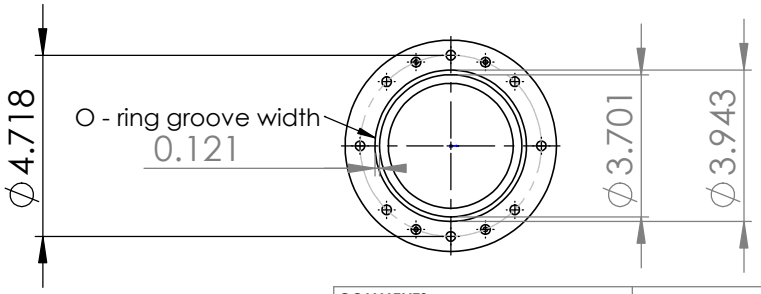

TURBOCAM INTERNATIONAL

	NAME	DATE
DRAWN BY	PSS	1/21/2019
CHECKED BY	***	
DIVISION	***	

COMMENTS:
UNH rocket team first build.

O-ring groove dimensions are calculated for size#154 silicone 70 shore A o-ring.

GD&T: ASME Y14.5 2009
THIRD ANGLE PROJECTION
UNCONTROLLED COPY WHEN PRINTED

UNLESS OTHERWISE SPECIFIED:
ALL DIMENSIONS IN INCHES
X.XX ±0.01
X.XXX ±0.005
X.XXXX ±0.0005
ANGLES ±1°
SURFACE FINISH 63 µin RA

MATERIAL: Aluminum

PROPRIETARY AND CONFIDENTIAL
THE INFORMATION CONTAINED IN THIS DRAWING IS THE SOLE PROPERTY OF **TURBOCAM INC**. ANY REPRODUCTION IN PART OR AS A WHOLE WITHOUT THE WRITTEN PERMISSION OF **TURBOCAM INC** IS PROHIBITED.

TITLE: Combustion Chamber TST1

DESCRIPTION: ***

DWG NO: Combustion Chamber TST1 **REV:** ***

SCALE: 1:5 **SHEET** 1 OF 1

SOLIDWORKS Educational Product. For Instructional Use Only.