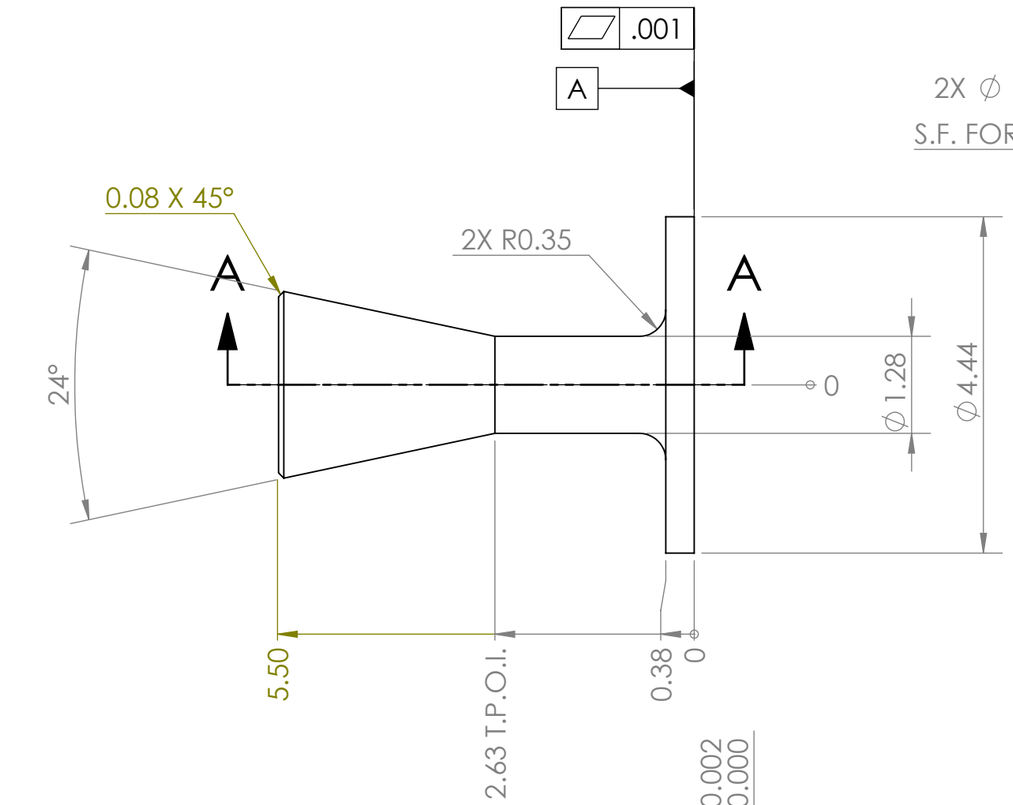

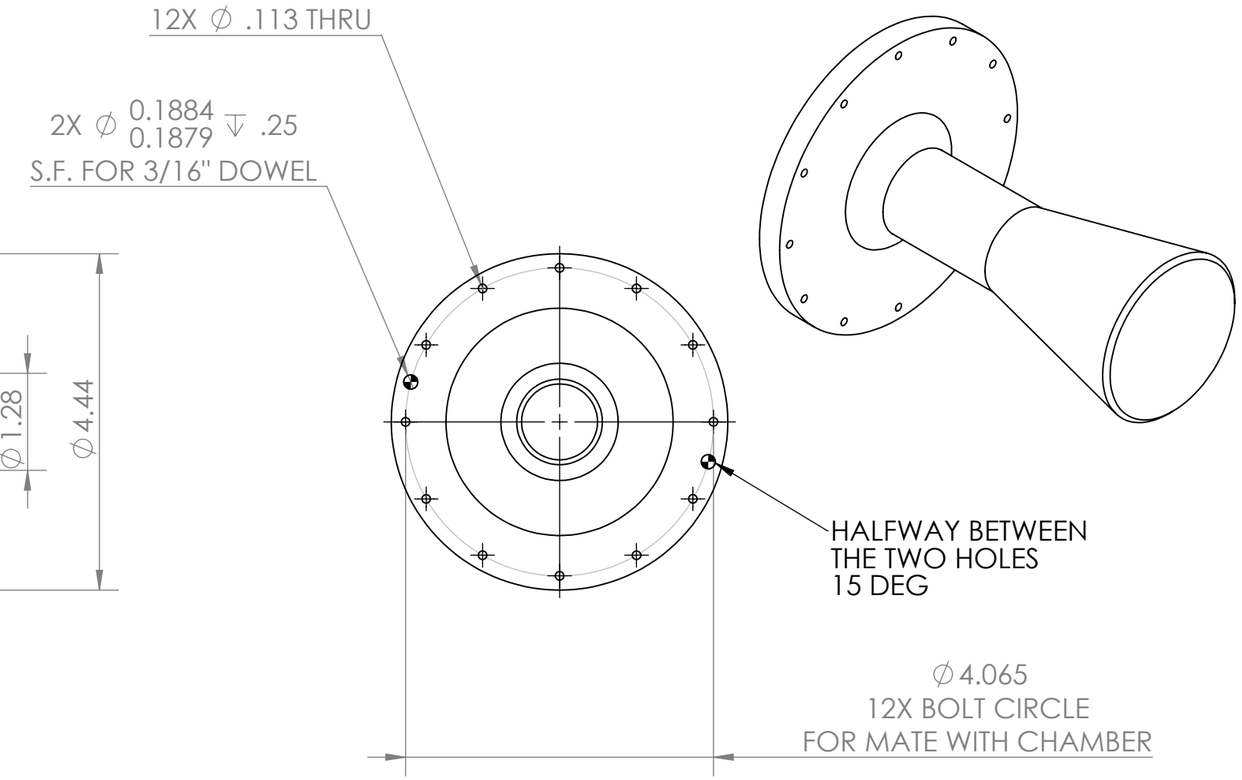

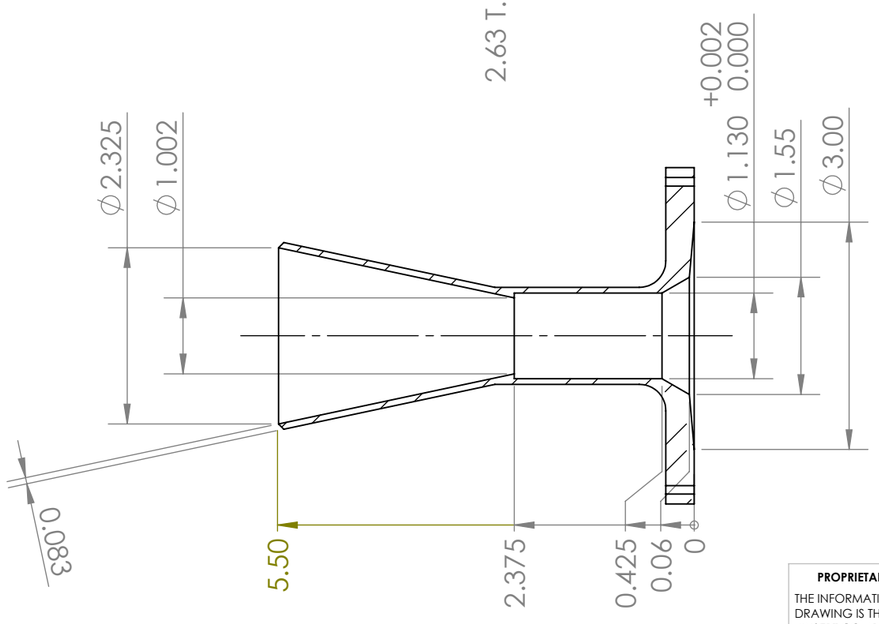

SECTION A-A

NOTES:
1. FLANGE MATE IS CRITICAL
2. INSIDE SURFACE FINISH SMOOTH
3. IF ANY OTHER DIMENSIONS ARE OUT OF TOLERENCE, BETTER TO HAVE MORE MATERIAL AS THIS IS NOT FOR FLIGHT AND WEIGHT SAVINGS ISN'T AS IMPORTANT

PROPRIETARY AND CONFIDENTIAL

THE INFORMATION CONTAINED IN THIS DRAWING IS THE SOLE PROPERTY OF <INSERT COMPANY NAME HERE>. ANY REPRODUCTION IN PART OR AS A WHOLE WITHOUT THE WRITTEN PERMISSION OF <INSERT COMPANY NAME HERE> IS PROHIBITED.

NEXT ASSY	USED ON	UNLESS OTHERWISE SPECIFIED:		NAME	DATE
		DIMENSIONS ARE IN INCHES TOLERANCES: ANGULAR: MACH ±0.5 DEG TWO PLACE DECIMAL ± .01 THREE PLACE DECIMAL ± .005 FOUR PLACE DECIMAL ± .001	DRAWN	Z RABOIN	12/13
			CHECKED	C.NITSCHELM	12/13
			ENG APPR.		
			MFG APPR.		
		INTERPRET GEOMETRIC TOLERANCING PER:	Q.A.		
		MATERIAL 304 STAINLESS STEEL	COMMENTS:		
		FINISH NA			
APPLICATION		DO NOT SCALE DRAWING			

TITLE:
BASE STRUCTURE

SIZE	DWG. NO.	REV
B	NozzleBase	
SCALE: 1:2	WEIGHT:	SHEET 1 OF 1

SOLIDWORKS Educational Product. For Instructional Use Only.