YIWU KUNDE ELECTRIC CO.,LTD

Mob/WhatsApp/Wechat: （+86）13566954989

Email: kundelec@126.com

Website: www.kundelec.yiwugo.com

Add: Yiwu Binwang Market A0-033~035

Yiwu Kunde Electric Co., Ltd. Established in 2015, located in the world's small commodity capital (Yiwu, China), is a professional exporter on power electric fittings, cable accessories. After years of active market development and trade accumulation, the products are mainly exported to Southeast Asia, the Middle East, Africa, South America and other countries and regions. The company adhering to the "Credibility as a cornerstone, Quality is fundamental" guiding ideology, brings quality procurement experience to every cooperative customers! No matter what the road ahead, we will continue to contribute to the prosperity and development of the power industry!

DTL-1 Bimetallic Friction Welding Lug(CU/AL)

DESCRIPTION

Application:

DTL-1 Cable Bimetallic Lugs are suitable for aluminum to copper terminations.

Features:

1.Prefilled with jointing compound.

2. Friction welded.

3. Material: CU≥99.9%, AL≥99.5%

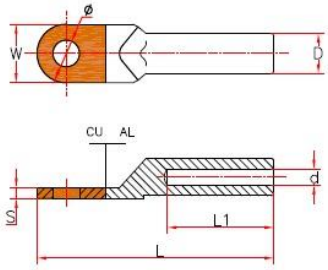

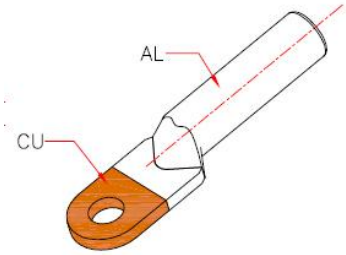

Item No.	φ±0.3	D±0.2	d±0.2	L±2	L1±2	W±0.2	S±0.2
DTL-1-10	8.5	10	5.2	65	30	16	2.2
DTL-1-16	8.5	11	6.1	70	31	16	2.2
DTL-1-25	8.5	12	7.1	75	35	18	2.8
DTL-1-35	10.5	14	8.5	85	38	20.5	3.0
DTL-1-50	10.5	16	9.8	90	42	23	3.4
DTL-1-70	12.5	18	11.5	102	47	26	3.6
DTL-1-95	12.5	21	13.5	112	51	28	4.2
DTL-1-120	14.5	23	15.0	120	53	30	4.8
DTL-1-150	14.5	25	17.0	126	56	34	5.3
DTL-1-185	16.5	27	18.6	133	58	37	5.8
DTL-1-240	16.5	30	21.5	140	60	40	6.0
DTL-1-300	18.0	34	23.5	165	66	45	7.0
DTL-1-400	21.0	38	26.5	178	76	50	--
DTL-1-500	21.0	45	29.5	200	85	55	--
DTL-1-630	--	50	32.5	225	85	60	--
DTL-1-800	--	60	37.0	270	90	100	--

DTLS Bimetallic Friction Welding Lug(2 Holes)

DESCRIPTION

Application:

DTLS Cable Bimetallic Lugs are suitable for aluminum to copper terminations.

Features:

1. Material: AL Purity ≥99.5% CU Purity ≥99.9%

2.Technology: Friction welding

3. Aluminium barrel is filled by neutral grease and covered by cap

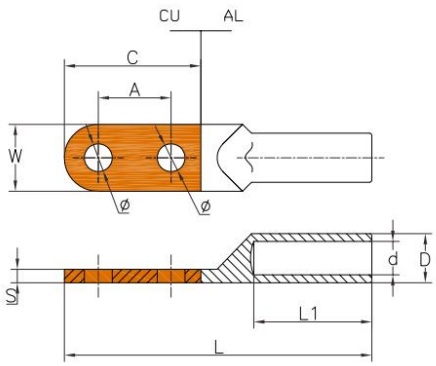

Item No.	φ±0.3	A±0.3	D±0.2	d±0.2	L±2	L1±2	W±0.2	S±0.2	C±1
DTLS-16	8.5	20	12	6	90	32	18	2.8	37
DTLS-25	8.5	20	12	7	90	34	18	2.8	37
DTLS-35	10.5	23	14	8.8	108	38.5	21	2.9	44
DTLS-50	10.5	25	16	10.5	109	42	23	2.9	42
DTLS-70	10.5	30	18	12	127	45.5	26	3.8	49
DTLS-95	10.5	30	20	13.8	133	51.5	28	4.0	52
DTLS-120	12.5	30	22.5	15.5	143	52	30	5.0	52
DTLS-150	12.5	34	24.5	17	156	57	34	5.3	60
DTLS-185	12.5	35	27.5	18.5	165	57	40	6.0	65
DTLS-240	12.5	35	30	21.5	172	61	40	7.0	67
DTLS-300	14.5	39	34	24	201	74	50	7.0	76
DTLS-400	14.5	40	38	26	202	65	50	7.0	76

DTL-2 Bimetallic Friction Welding Lug(CU/AL)

DESCRIPTION

Application:

DTL-2 Cable Bimetallic Lug is suitable for aluminum to copper terminations.

Features:

1.Aluminium barrel is filled by neutral grease and covered by cap.

2.Friction welded.

3.Material: CU≥99.9%, AL≥99.5%

4.We also can produce 2 holes or 3 holes,and also can Tinned on the copper plam or aluminium barrel

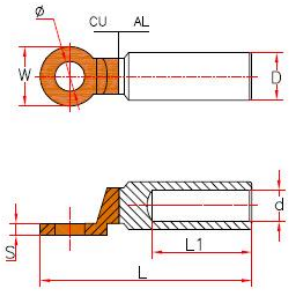

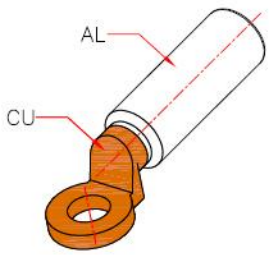

Item No.	Ø±0.3	D±0.2	d±0.2	L±2	L1±2	W±0.2	S±0.2
DTL-2-10	10.5	14	5.5	80	42	20	3.0
DTL-2-16	10.5	16	6.5	80	42	20	3.0
DTL-2-25	10.5	16	7.5	80	42	20	3.0
DTL-2-35	10.5	16	8.5	80	42	20	3.0
DTL-2-50	12.8	20	9.8	90	43	25	4.5
DTL-2-70	12.8	20	11.5	90	43	25	4.5
DTL-2-95	12.8	20	13.5	90	43	25	4.5
DTL-2-120	12.8	25	15.0	114	60	30	5.5
DTL-2-150	12.8	25	16.5	114	60	30	5.5
DTL-2-185	12.8	32	18.5	118	60	35	6.0
DTL-2-240	12.8	32	21.5	118	60	35	6.0
DTL-2-300	12.8	34	23.5	127	72	35	6.0
DTL-2-400	17.0	40	26.0	160	93	36	7.0
DTL-2-500	17.0	47	29.5	160	94	36	7.0
DTL-2-630	17.0	47	32.5	180	94	50	9.0

DTL-F Bimetallic Friction Welding Lug(CU/AL)

DESCRIPTION

Features:

1.The solid palm eliminates the ingress of moisture.

2.Prefilled with jointing compound.

3.Friction welded.

4.Material: Cu≥99.9% ,Al≥99.5 %

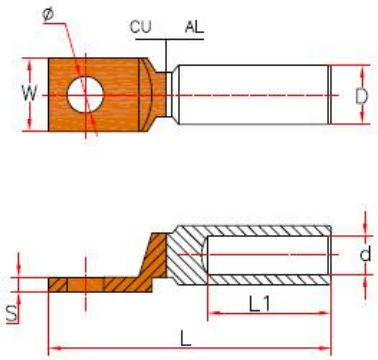

Item No.	φ±0.3	D±0.2	d±0.2	L±2	L1±2	W±0.2	S±0.2
DTL-F-10	8.5	16	4.5	87	42	14.0	4.2
DTL-F-16	8.5	16	5.5	87	42	14.0	4.2
DTL-F-25	8.5	16	7.0	87	42	14.0	4.2
DTL-F-35	8.5	16	8.5	87	42	14.0	4.2
DTL-F-50	10.5	20	9.5	100	50	17.0	5.2
DTL-F-70	10.5	20	11.5	100	50	17.0	5.2
DTL-F-95	10.5	20	13.0	100	50	17.0	5.2
DTL-F-120	13.0	25	15.0	120	60	21.0	6.2
DTL-F-150	13.0	25	16.5	120	60	21.0	6.2
DTL-F-185	13.0	32	18.0	125	60	25.0	7.2
DTL-F-240	13.0	32	19.5	125	60	25.0	7.2
DTL-F-300	13.0	34	23.5	145	65	30.0	8.0
DTL-F-400	13.0	40	26.0	150	70	32.0	8.0
DTL-F-500	13.0	40	29.0	150	70	32.0	8.0

DTLF-S Bimetallic Friction Welding Lug(2 Holes)

DESCRIPTION

Application:

DTLF-S Cable Bimetallic Lugs are suitable for aluminum to copper terminations.

Features:

1.Material: AL Purity ≥99.5% CU Purity ≥99.9%

2.Technology: Friction welding

3.Aluminium barrel is filled by neutral grease and covered by cap

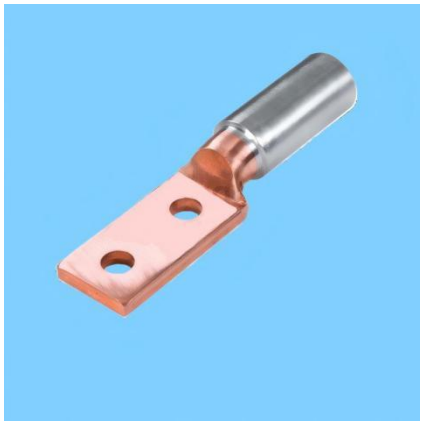

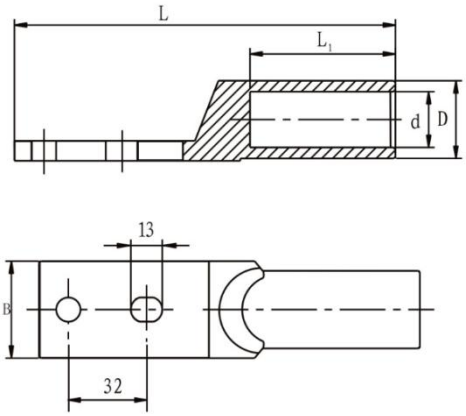

Item No.	Dimensions mm				
	d	D	L1	L	B
DTLF-35S	8.5	16	40	117	22
DTLF-50S	9.5	16	42	117	22
DTLF-70S	11.5	18	48	133	28
DTLF-95S	13.5	21	52	144	28
DTLF-120S	15	23	53	148	34
DTLF-150S	16.5	25	56	152	34
DTLF-185S	18.5	27	58	163	40
DTLF-240S	21	30	60	168	40
DTLF-300S	24	34	65	180	50
DTLF-400S	27	38	70	192	50

DTL-2S Bimetallic Friction Welding Lug(2 Holes)

DESCRIPTION

Application:

DTL-2S Cable Bimetallic Lugs are suitable for aluminum to copper terminations.

Features:

1.Material: AL Purity ≥99.5% CU Purity ≥99.9%

2.Technology: Friction welding

3.Aluminium barrel is filled by neutral grease and covered by cap

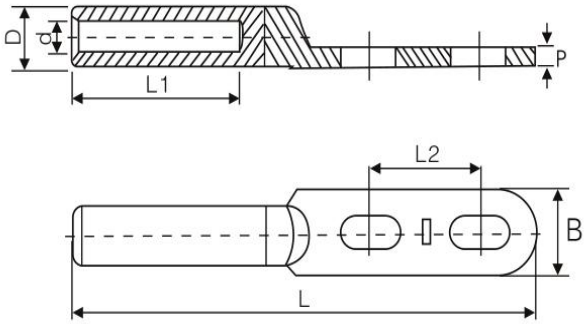

Item No.	Dimensions(mm)						
	d	D	L1	L2	L	B	P
DTL-2-35S	8.5	14	40	45	155	26	4
DTL-2-50S	9.5	16	40	45	155	26	4.5
DTL-2-70S	11.5	18	40	45	155	26	5
DTL-2-95S	13.5	21	50	45	180	30	5.5
DTL-2-120S	15	23	50	45	180	30	6
DTL-2-150S	16.5	25	50	45	180	30	6
DTL-2-180S	18.5	28	60	45	200	40	7
DTL-2-240S	21	30	60	45	200	40	7
DTL-2-300S	23.5	34	80	45	200	40	7

DTL-3 Bimetallic Friction Welding Lug(CU/AL)

DESCRIPTION

Application:

DTL-3 Bimetallic Lug is suitable for screwing non-tension aluminum connections using Cu-washers in humid areas and for pre-rounded sector shaped conductors.

Features:

1. With CU eye in screw-on and markings for correct crimping.
2. Aluminium barrel is filled by neutral grease and covered by cap.
3. Material: CU≥99.9%, AL≥99.5%

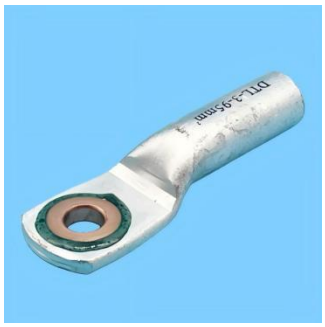

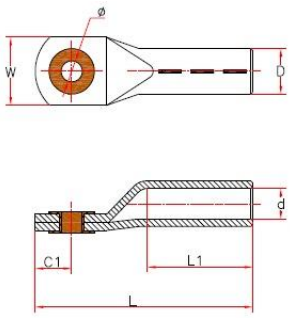

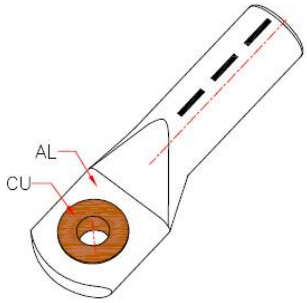

Item No.	D±0.2	d±0.2	φ±0.3	C1±1	L±2	W±0.2
DTL-3-35	14	8.5	10.5	14.9	82	25
DTL-3-50	16	10.0	10.5	14.5	87	37
DTL-3-70	18	11.5	13.0	17.2	102	32
DTL-3-95	21	13.5	13.0	19.6	106	35
DTL-3-120	23	15.0	13.0	16.5	112	35
DTL-3-150	25	16.5	13.0	18.9	125	35
DTL-3-185	28	18.5	13.0	22.0	133	42
DTL-3-240	32	21.0	17.0	26.2	140	46
DTL-3-300	34	23.5	17.0	26.0	155	50
DTL-3-400	38	26.5	17.0	30.0	170	58

DTL-4/CPTAU Pre-insulated Bimetallic Lug(CU/AL)

DESCRIPTION

Application:

The DTL-4/CPTAU Pre-insulated bimetallic lug is used to establish connection between LV-ABC cable and electrical equipment.

Features:

1. Palm is made of 99.9% pure copper and sleeve is made of 99.6% pure aluminium.
2. Cross-section of conductor can be easily identified by the color code of elastomeric rings.
3. Elastomeric ring and pre-filled grease enable super waterproof performance.
4. Water tightness test carried out at 6kV for 1 minute under water.
5. Insulation tube is made of weather and UV resistant polymer.
6. Standard: EN 50483-4 ,NFC 33-021

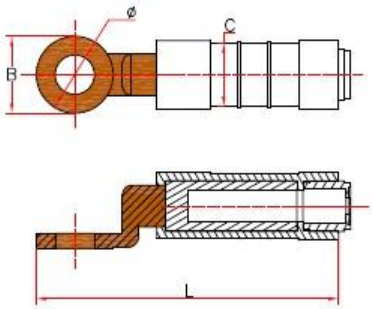

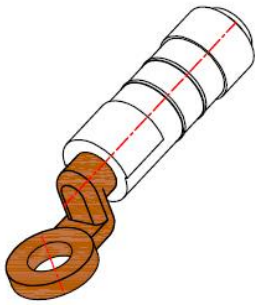

Item No.	φ	C	B	L	Color code
DTL-4 16-10	10.5	16	20	75	Blue
DTL-4 25-12	13	16	24	100	Orange
DTL-4 35-12	13	20	24	100	Red
DTL-4 50-12	13	20	24	100	Yellow
DTL-4 70-12	13	20	24	100	White
DTL-4 95-12	13	20	24	100	Grey
DTL-4 120-12	13	28	30	118	Pink
DTL-4 150-12	13	28	30	118	Purple

DTL-5 Forged Bimetallic Friction Welding Lug(CU/AL)

DESCRIPTION

Application:

DTL-5 Forged Bimetallic Lugs are suitable for connecting ABC cables to transformers, switchgear etc. on the pole top.

Features:

1. Friction welded.
2. Aluminium barrel is filled by neutral grease and covered by cap.
3. Material: CU≥99.9%, AL≥99.5%

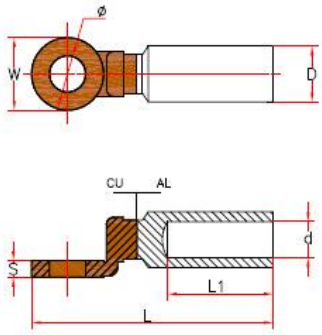

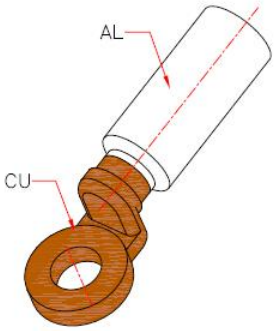

Item No.	φ±0.3	D±0.2	d±0.2	L±2	L1±2	W±0.2	S±0.2
DTL-5-16	10.5	16	5.5	80	40	20	4.0
DTL-5-25	10.5	16	7.0	80	40	20	4.0
DTL-5-35	10.5	16	8.2	80	40	20	4.0
DTL-5-50	12.8	20	9.2	90	43	25	5.5
DTL-5-70	12.8	20	11.2	90	43	25	5.5
DTL-5-95	12.8	20	12.5	90	43	25	5.5
DTL-5-120	12.8	25	14.0	112	58	30	6.5
DTL-5-150	12.8	25	16.5	112	58	30	6.5
DTL-5-185	12.8	32	18.5	122	60	35	7.0
DTL-5-240	12.8	32	20.0	122	60	35	7.0
DTL-5-300	12.8	34	23.5	125	65	35	7.0
DTL-5-400	17.0	40	26.0	160	90	36	7.0
DTL-5-500	17.0	40	29.5	160	90	36	7.0

DTL-6 Bimetallic Friction Welding Lug(AL/CU)

DESCRIPTION

Application:

DTL-6 Reverse Bimetallic Crimp Lug is suitable for aluminum to copper terminations.

Features:

1. Prefilled with jointing compound.
2. Friction welded.
3. Material: CU≥99.9%, AL≥99.5%

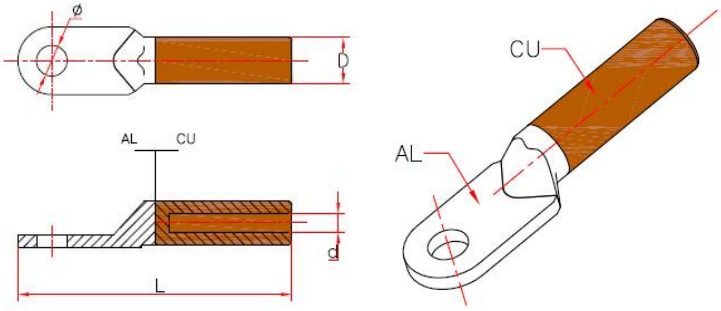

Item No.	φ±0.3	D±0.2	d±0.2	L±2
DTL-6-10	8.5	9	5.2	66
DTL-6-16	8.5	10	6.1	70
DTL-6-25	8.5	11	7.1	76
DTL-6-35	10.5	12	8.5	83
DTL-6-50	10.5	14	9.8	90
DTL-6-70	12.5	16	11.5	102
DTL-6-95	12.5	18	13.5	112
DTL-6-120	14.5	20	15.0	120
DTL-6-150	14.5	22	17.0	126
DTL-6-185	16.5	25	18.6	134
DTL-6-240	16.5	27	21.5	140
DTL-6-300	21.0	31	24.0	160
DTL-6-400	21.0	34	27.0	178
DTL-6-500	21.0	38	30.0	200

DTL-7/PBL Pin Friction Welded Connector(CU/AL)

DESCRIPTION

Application:

DTL-7 Pin Friction Welded Connector is suitable for screwing non-tension Al connections in Cu clamps.

Features:

1. Friction welded.
2. Aluminium barrel is filled by neutral grease and covered by cap.
3. Pre-rounded sector shaped conductors.
4. Material: CU≥99.9%, AL≥99.5%

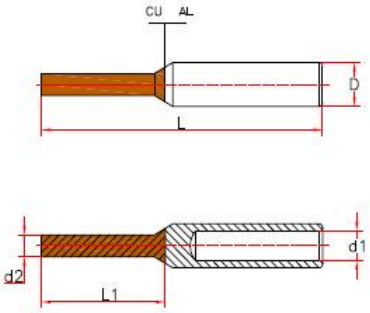

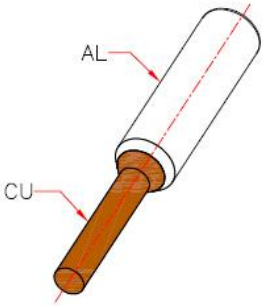

Item No.	d1±0.2	D±0.2	d2±0.2	L1±1	L±2
DTL-7-16	6.3	12	6	20	58
DTL-7-25	7.1	12	6	20	58
DTL-7-35	8.5	14	7	22	71
DTL-7-50	10.0	16	8	25	74
DTL-7-70	11.5	18	10	30	87
DTL-7-95	13.5	22	12	33	91
DTL-7-120	15.0	23	12	38	98
DTL-7-150	18.5	25	12	38	108
DTL-7-185	19.0	27	14	40	118
DTL-7-240	21.0	32	16	40	128

DTL-FP Bimetallic Friction Welding Lug(CU/AL)

DESCRIPTION

Application:

Used for transition connection of aluminium cable or aluminium alloy cable with copper end of mini circuit breaker in low voltage.

Features:

1.Material: Al ≥ 99.5%, Cu ≥ 99.9%

2.Feature: Oil blocking structure

3.Friction welded

4.Cubic copper pin

5.Clear markings on barrel to indicate correct crimping location

6.Standard: IEC 61238-1:2003

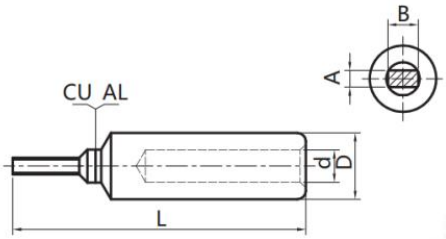

Item No.	Conductor mm²	L mm	d mm	D mm	B mm	A mm	Pack pcs
DTL-FP-10	10	49	4.5	12.5	5.5	3	1120
DTL-FP-16	16	49	5.5	12.5	5.5	3	1120
DTL-FP-25	25	49	7.0	12.5	5.5	3	1120
DTL-FP-35	35	49	8.0	12.5	6.0	4	1120
DTL-FP-50	50	52	9.0	15	7.0	5	960
DTL-FP-70	70	56	11.0	17.5	8.5	6	840
DTL-FP-95	95	62	12.5	21	9.7	7.5	480
DTL-FP-120	120	62	13.7	21	9.7	7.5	480

DTL-MC Bimetallic Lug For MCCB(CU/AL)

DESCRIPTION

Application:

Used for transition connection of aluminium cable or aluminium alloy cable with copper end of electrical equipment in low voltage.

Features:

1.Material: Al ≥ 99.5%, Cu ≥ 99.9%

2.Feature: Oil blocking structure

3.Friction welded

4.Narrow palm design, especially suitable for equipment with narrow contact area or space such as connections of MCCB and Motors

5.Clear markings on barrel to indicate correct crimping location

6.Standard: IEC 61238-1:2003

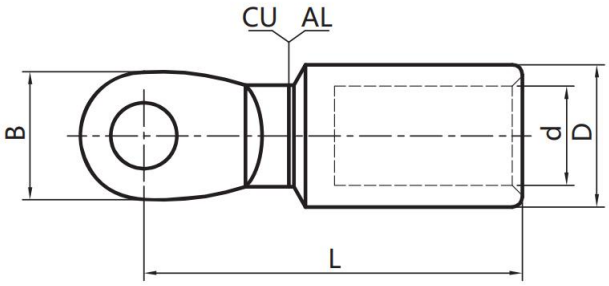

Item No.	Conductor mm²	L mm	d mm	D mm	B mm	Stud Size	Pack pcs
DTL-MC-10	10	53	4.5	12.5	14	M8	1200
DTL-MC-16	16	53	5.5	12.5	14	M8	1200
DTL-MC-25	25	53	7	12.5	14	M8	1120
DTL-MC-35	35	53	8	12.5	14	M8	1120
DTL-MC-50	50	56	9	15	16	M8	640
DTL-MC-70	70	56	11	17.5	16	M8	640
DTL-MC-95	95	59	12.5	21	18	M8	400
DTL-MC-120	120	59	13.7	21	18	M8	400
DTL-MC-150	150	74.5	15.5	28	25	M10	160
DTL-MC-185	185	74.5	17	28	25	M10	160
DTL-MC-240	240	74.5	19.5	28	25	M10	160
DTL-MC-300	300	86.5	22	32	30	M12	120
DTL-MC-400	400	91.5	25.1	36	32	M12	100

ACL Bimetallic Lug For MCCB(CU/AL)

DESCRIPTION

Application:

ACL Forged Bimetallic Lugs are suitable for connecting ABC cables to transformers, switchgear etc. on the pole top.

Features:

1. Friction welded.
2. Aluminium barrel is filled by neutral grease and covered by cap.
3. Material: CU≥99.9%, AL≥99.5%

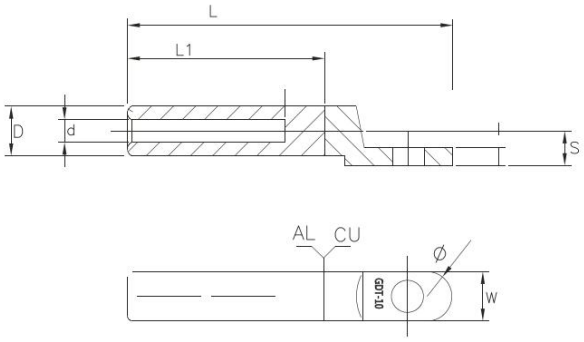

Item No.	D	d	L	L1	S	Ø	W
ACL-10	10	4.5	66	40	7	6.5	10
ACL-16	10	5.5	66	40	7	6.5	10
ACL-25	12	7	72	45	8	8.5	13
ACL-35	14	8.5	80	51	9	8.5	14
ACL-50	16	9.5	87	54	10	8.5	16
ACL-70	18	12	95	59	11	8.5	20
ACL-95	21	13	102	62	12.5	10.5	20
ACL-120	23	15	105	65	13.5	10.5	22
ACL-150	25	16	112	67	14.5	10.5	25
ACL-185	27	18	121	70	15.5	13	28
ACL-240	30	20	124	73	17	13	30
ACL-300	34	23	133	78	19	13	30
ACL-400	38	26	142	83	21	13	30

CALB-N Bimetallic Cable Lug

DESCRIPTION

Application:

Used for transition connection of aluminum cable or aluminum alloy cable with copper end of electrical equipment in low voltage.

Features:

1. Friction welded.
2. Aluminium barrel is filled by neutral grease and covered by cap.
3. Material: CU≥99.9%, AL≥99.5%
4. Narrow palm design,especially suitable for equipment with narrow contact area or space,such as connections of MCCB and motors. Standard: IEC 61238:2003

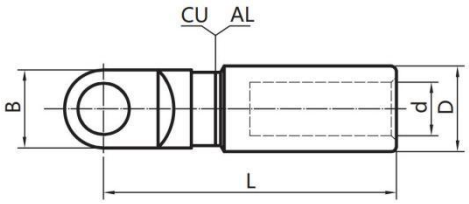

Item No.	Conductor Size	Dimensions(mm)			
	mm	L	d	D	B
CALB-10N-8	10	64	4.5	14	14
CALB-16N-8	16	64	5.5	14	14
CALB-25N-8	25	64	7	14	14
CALB-35N-8	35	64	8	14	14
CALB-50N-10	50	84	9	18	16
CALB-70N-10	70	84	11	18	16
CALB-95N-10	95	94	12.5	21	18
CALB-120N-10	120	94	13.7	21	18
CALB-150N-10	150	110	15.5	25	22
CALB-185N-10	185	110	17	28	22
CALB-240N-10	240	110	19.5	28	22
CALB-300N-12	300	140	22	34	30

DTL-N Narrow Plate Bimetallic Friction Welding Lug(CU/AL)

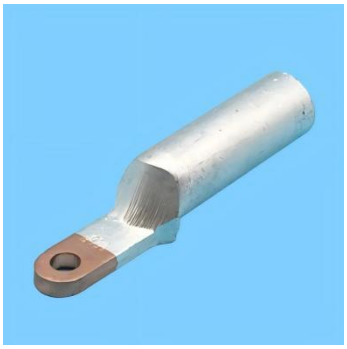

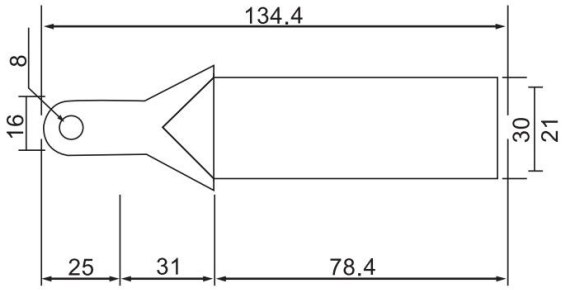

Item No.	Plate Width	Hole Size Ø	Length	Plate Thickness
DTL-N-25	16	8	74	2.8
DTL-N-35	16	8	83.5	2.8
DTL-N-50	16	8	89.8	3.1
DTL-N-70	16	8	93	3.8
DTL-N-95	16	8	99	4.0
DTL-N-120	16	8	104.5	4.2
DTL-N-150	16	8	113.5	5.5
DTL-N-185	16	8	121.5	6.2
DTL-N-240	16	8	133.5	7.0

DT-N Narrow Plate Copper Friction Welding Lug

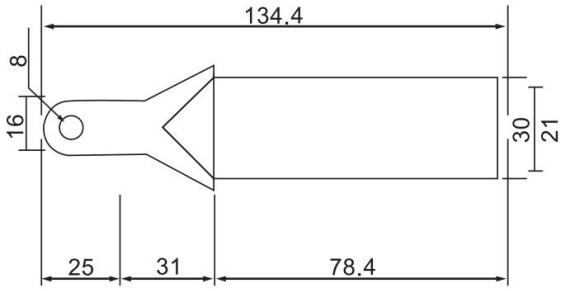

Item No.	Plate Width	Hole Size Ø	Length	Plate Thickness
DT-N-25	16	8	76	2.7
DT-N-35	16	8	81	3.0
DT-N-50	16	8	85	3.5
DT-N-70	16	8	87.5	3.8
DT-N-95	16	8	91	4.4
DT-N-120	16	8	95	5.0
DT-N-150	16	8	100	5.2
DT-N-185	16	8	119.2	5.4
DT-N-240	16	8	122.4	6.0

DTCL-200 EURO Bimetallic Crimp Lug(200A)

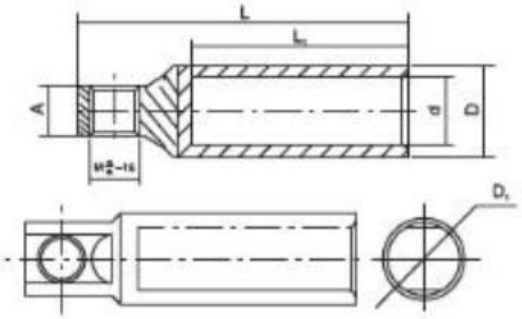

Item No.	D1	D	d	L	L1	A	Qty/Ctn
DTCL-200-16	16	16	6	73	48	11	600
DTCL-200-25	16	16	7	73	48	11	600
DTCL-200-35	16	16	8.5	73	48	11	600
DTCL-200-50	16	16	10	73	48	11	360
DTCL-200-70	16	16	11.5	73	48	11	360
DTCL-200-95	16	20	13.5	73	48	11	240
DTCL-200-120	16	20	15	73	48	11	240

DTC-200 EURO Copper Crimp Lug(200A)

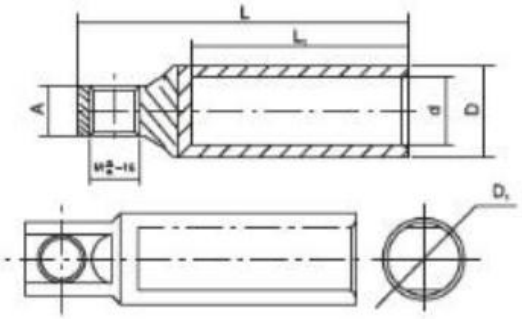

Item No.	D1	D	d	L	L1	A	Qty/Ctn
DTC-200-16	16	16	6	73	48	11	600
DTC-200-25	16	16	7	73	48	11	600
DTC-200-35	16	16	8.5	73	48	11	600
DTC-200-50	16	16	10	73	48	11	360
DTC-200-70	16	16	11.5	73	48	11	360
DTC-200-95	16	20	13.5	73	48	11	240
DTC-200-120	16	20	15	73	48	11	240

DTCL-630 EURO Bimetallic Crimp Lug(630A)

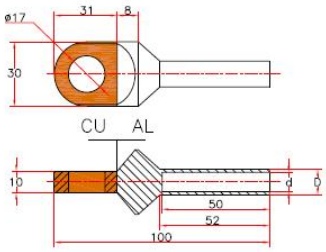

Item No.	D±0.5	d±0.3
DTCL-630-35	14	8
DTCL-630-50	16	10
DTCL-630-70	18	12
DTCL-630-95	21	13
DTCL-630-120	23	15
DTCL-630-150	25	16
DTCL-630-185	28	18
DTCL-630-240	31	20
DTCL-630-300	35	22
DTCL-630-400	39	25

DTC-630 EURO Copper Crimp Lug(630A)

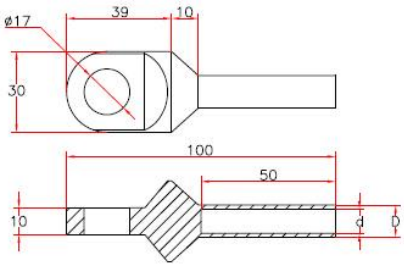

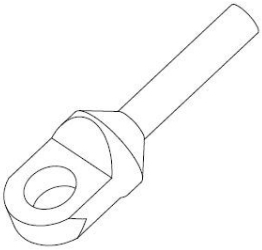

Item No.	D±0.5	d±0.3
DTC-630-16	9	5
DTC-630-25	10	7
DTC-630-35	12	9
DTC-630-50	14	10
DTC-630-70	16	12
DTC-630-95	18	13
DTC-630-120	21	15
DTC-630-150	23	16
DTC-630-185	25	18
DTC-630-240	28	20
DTC-630-300	31	22
DTC-630-400	35	25

DTLQ Bimetallic Crimp Lug(CU/AL)

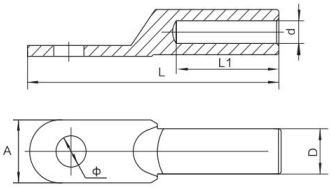

Item No.	d	D	Ø	L	L1	A	Qty/Ctn
DTLQ-16	5.5	12	8.4	76	32	20	1800
DTLQ-25	7	12	8.4	79	34	20	1500
DTLQ-35	8.5	14	10.5	85	40	20	900
DTLQ-50	9.5	16	10.5	90	42	23	600
DTLQ-70	12	18	12.5	102	47	26	600
DTLQ-95	13	21	12.5	112	50	28	360
DTLQ-120	15	23	14.5	120	53	30	300
DTLQ-150	16	25	14.5	126	55	34	240
DTLQ-185	18	27	16.5	133	58	37	170
DTLQ-240	20	30	16.5	140	60	40	160
DTLQ-300	23	34	21	165	65	45	150
DTLQ-400	26	38	21	170	70	52	100
DTLQ-500	29	42	21	190	75	60	50
DTLQ-630	34	54	/	225	80	78	40
DTLQ-800	38	60	/	270	90	100	30

DTLQS Bimetallic Crimp Lug With 2 Holes(CU/AL)

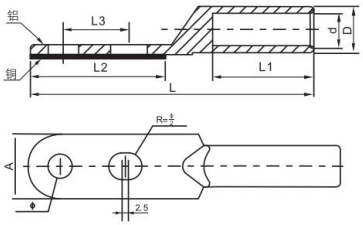

Item No.	D	d	L1	L	A	L2	L3	Ø
DTLQS-35	14	8.5	40	113	22	50	20	10.5
DTLQS-50	16	9.8	42	117	22	51	20	10.5
DTLQS-70	18	11.5	48	133	28	58	25	10.5
DTLQS-95	20	13.5	52	142	28	59	25	10.5
DTLQS-120	22	15	53	155	34	65	30	12.5
DTLQS-150	24	16.5	56	157	34	65	30	12.5
DTLQS-185	27	18.5	58	167	40	75	35	12.5
DTLQS-240	30	21	60	171	40	75	35	12.5
DTLQS-300	34	24	65	195	50	90	40	14.5
DTLQS-400	38	27	70	205	50	90	40	14.5

DT Copper Crimp Lug

DESCRIPTION

Application:

DT Copper Lug is suitable for copper conductor, made of Seamless copper tube and finished electro tinned.

Features:

1.DT Copper Lugs come in sizes to fit cables ranging from 16 mm2 up to 300mm2. Eyelet sizes available are 6mm. 8mm.10mm.12mm.16mm and 20mm or according to customers requirements.

2.It is seamless copper tube guarantee good quality.

3.The cable area of DT copper lug is identified clearly on the lug.

4.Material: CU≥99.9%

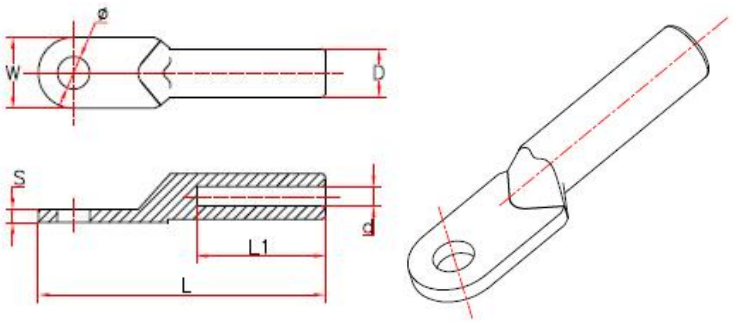

Item No.	Φ±0.5	D±0.3	d±0.3	L±2	L1±2	W±1	S±0.5	Weight(g)
DT-16	Φ8.5	10.1	6.6	70	-	16.2	2	29
DT-25	Φ8.5	11.1	7.4	71	32	18.2	2.5	33
DT-35	Φ10.5	12	8.4	79	37	20.2	3	43
DT-50	Φ10.5	14	9.8	84	40	23.1	3.7	63
DT-70	Φ12.5	16	11.6	93	42	26.2	4.5	90
DT-95	Φ12.5	18.2	13.6	102	44.5	28.3	4.5	120
DT-120	Φ14.5	20	15.3	109	48	30.2	5.5	156
DT-150	Φ14.5	22.1	16.6	116	52	32.6	6	204
DT-185	Φ16.5	24.1	18.8	125	56	36.6	6.5	252
DT-240	Φ16.5	27	21.1	136	60	40.1	6.8	346
DT-300	Φ21	31.2	23.4	150	67	50	7.8	502

DTS Copper Crimp Lug(2 Holes)

DESCRIPTION

Application:

DTS Copper Lug is suitable for copper conductor, made of Seamless copper tube and finished electro tinned.

Features:

1.DTS Copper Lugs come in sizes to fit cables ranging from 16mm2 up to 300mm2. Eyelet sizes available are 6mm. 8mm. 10mm. 12mm. 16mm and 20mm or according to customers requirements.

2.It is seamless copper tube guarantee good quality.

3.The cable area of DTS copper lug is identified clearly on the lug.

4.Material: CU≥99.9%

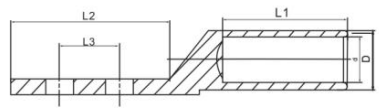

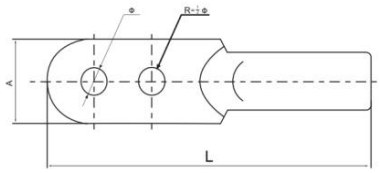

Item No.	Ø	D	d	L1	L	A	L2	L3
DTS-10	8.5	9	5.5	28	81	16	41	20
DTS-16	8.5	10	6.5	32	87	16	41	20
DTS-25	8.5	11	7.4	34	88	18	41	20
DTS-35	8.5	12	8.4	37	100	23	48	20
DTS-50	8.5	14	10	40	106	23	51	20
DTS-70	10.5	16	11.8	43	118	28	56	25
DTS-95	10.5	18	13.5	49	126	28	57	25
DTS-120	13	20	15	50	138	34	66	30
DTS-150	13	22	17	56	140	34	66	30
DTS-185	13	25	19	56	152	40	70	35
DTS-240	13	27	21	62	158	40	70	35
DTS-300	17	30	23.5	68	175	45	80	45
DTS-400	17	34	27	70	185	50	82	45
DTS-500	17	38	29.2	82	218	60	100	45
DTS-630	17	45	34.5	87	227	60	100	45

DTG Copper Crimp Lug

DESCRIPTION

Features:

1.Have a viewing window to check the location of the conductor.

2.Cable area is identified clearly on the lug.

3.Material: CU≥99.9%

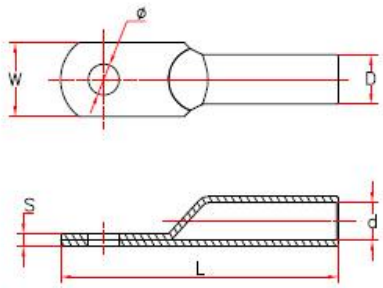

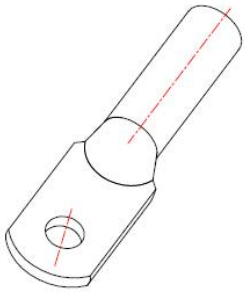

Item No.	Φ±0.5	D±0.5	d±0.5	L±2	W±0.5	S±0.5	Weight(g)
DTG-10	8.5	8.0	5.4	51	12.4	2.2	11.5
DTG-16	8.5	8.8	6.0	56	12.4	2.7	15
DTG-25	8.5	10.0	7.1	61	14.3	2.8	19
DTG-35	10.5	11.0	8.2	66	15.8	2.8	22
DTG-50	10.5	13.0	10.1	71	18.9	3.0	31
DTG-70	12.5	16.0	12.1	80	23.0	3.9	56
DTG-95	12.5	18.0	14.0	86	26.0	4.0	73
DTG-120	14.5	20.0	15.7	95	28.7	4.4	100
DTG-150	14.5	22.0	17.4	101	32.0	4.7	120
DTG-185	16.5	25.0	19.2	112	36.0	5.8	182
DTG-240	16.5	27.0	21.0	118	38.7	6.0	210
DTG-300	16.5	30.0	24.1	134	43.5	6.0	310
DTG-400	18.5	33.0	26.0	153	47.5	7.0	440
DTG-500	20.5	40.0	31.7	170	58.0	8.5	750
DTG-630	20.5	45.0	36.0	210	65.0	9.2	1050

DTGS Copper Crimp Lug(2 Holes)

DESCRIPTION

Features:

1.Have a viewing window to check the location of the conductor.

2.Cable area is identified clearly on the lug.

3.Material: CU≥99.9%

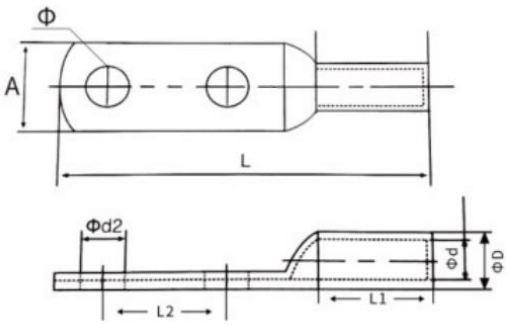

Item No.	Ø	D	d	A	L2	L	L1	Qty/Ctn
DTGS-16	8.2	9	6	12.8	25	80	29	1800
DTGS-25	8.2	10	7	14.1	25	85	32	1800
DTGS-35	8.2	11	8	15.4	25	90	33	1080
DTGS-50	8.2	13	10	18.8	25	99	37	600
DTGS-70	12.5	16	12	22.5	35	120	43	300
DTGS-95	12.5	18	14	26	35	125	45	300
DTGS-120	14.5	20	15.2	29	35	134	50	240
DTGS-150	14.5	22	17	31.7	35	139	52	180
DTGS-185	14.5	24	19	34.4	35	150	60	120
DTGS-240	16.5	26	21	37.7	45	160	70	120
DTGS-300	16.5	30	24	43.4	45	164	75	90
DTGS-400	16.5	34	27	49	60	180	80	60
DTGS-500	20.5	38	30	55	60	225	90	36
DTGS-630	20.5	45	35	64.7	60	235	105	24

JG Copper Crimp Lug

DESCRIPTION

Application:

JG Copper Copper Crimp Lugs are suitable for the connection of copper conductors(section 10-300mm2) in power cable with electronic equipment.

Feature:

1.Have a viewing window to check the location of the conductor
2.Unique bell mouth for easy insertion of stranded conductors
3.Material: CU≥99.9%
4.Surface: electro tin plated
5.Application: low voltage, indoor
6.We also can produce 2 holes or 3 holes

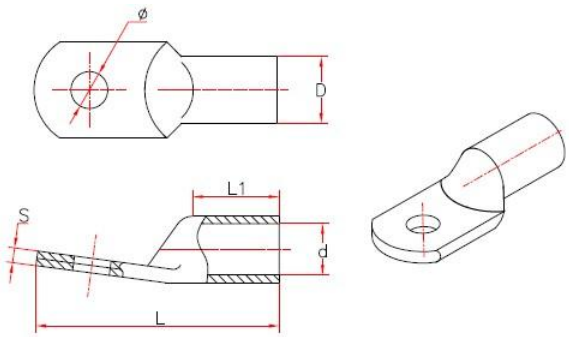

Item No.	Φ±0.5	D±0.5	d±0.5	L±2	L1±2	W±0.5	S±0.5	Weight(g)
JG-10	Φ6.5 , Φ8.5	8	5.8	38	12	11.4	2.0	7.7
JG-16	Φ6.5 , Φ8.5	9	6.8	41	15	12.9	2.1	9.5
JG-16	Φ10.5	9	6.7	41	15	14.5	2.0	9.5
JG-25	Φ8.5,Φ10.5	10	7.8	46	16	14.5	2.2	10.5
JG-35	Φ8.5,Φ10.5	11	8.8	52	17	16.2	2.2	14.8
JG-35	Φ12.5	11	8.8	52	17	17.6	2.1	14.8
JG-50	Φ8.5,Φ10.5	13	10.5	54	18	19.0	2.5	21.6
JG-50	Φ12.5	13	10.5	54	18	19.4	2.5	21.6
JG-70	Φ8.5,Φ10.5,Φ12.5	16	12.7	61	19	23.2	3.3	39.6
JG-95	Φ10.5,Φ12.5	18	14.6	66	19	26.0	3.3	50
JG-120	Φ10.5,Φ12.5,Φ14.5	20	15.8	72	20	29.0	4.0	63
JG-150	Φ10.5,Φ12.5,Φ14.5	22	17.2	75	21	32.0	4.1	73
JG-185	Φ12.5,Φ14.5,Φ16.5	25	19.5	86	25	36.3	5.2	109
JG-240	Φ14.5,Φ16.5	27	20.9	93	27	38.5	5.8	158
JG-300	Φ16.5	30	24.0	103	30	43.3	6.0	216

SC(JGA) Copper Crimp Lug

DESCRIPTION

Application:

JGA Copper Copper Crimp Lugs are suitable for the connection of copper conductors in power cable with electronic equipment.

Features:

1.Have a viewing window to check the location of the conductor.

2.Unique bell mouth for easy insertion of stranded conductors.

3.Material: Cu ≥99.9%

4.Surface: electro tin plated or pure

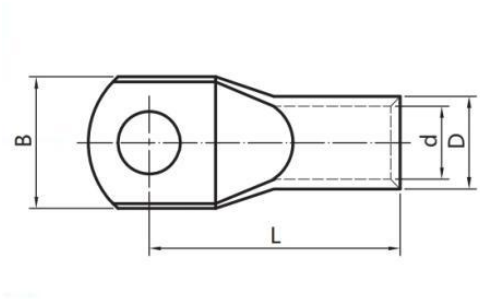

Item No.	B	D	d	L
SC(JGA) - 6	9.8	5.1	3.7	20
SC(JGA) - 10	12	6.1	4.5	20
SC(JGA) - 16	12.5	7.3	5.7	24
SC(JGA) - 25	13.1	9.0	7.2	28.5
SC(JGA) - 35	15.8	10.8	8.5	30
SC(JGA) - 50	18.1	12.5	9.8	36
SC(JGA) - 70	21	14.5	11.5	41
SC(JGA) - 95	24.8	17.0	13.7	45.5
SC(JGA) - 120	27.5	19.0	15.0	51.5
SC(JGA) - 150	30	21.0	16.7	58
SC(JGA) - 185	34	23.5	19.2	63.5
SC(JGA) - 240	37.4	26.0	21.0	74
SC(JGA) - 300	43.2	30.0	24.0	80.5
SC(JGA) - 400	49	34.0	27.0	89.5
SC(JGA) - 500	55	38.0	30.0	100.5
SC(JGA) - 630	64	44.0	35.0	114

SC(JGB) Copper Crimp Lug

DESCRIPTION

Application:

JGB Copper Copper Crimp Lugs are suitable for the connection of copper conductors in power cable with electronic equipment.

Features:

1.Have a viewing window to check the location of the conductor.

2.Unique bell mouth for easy insertion of stranded conductors.

3.Material: Cu ≥99.9%

4.Surface: electro tin plated

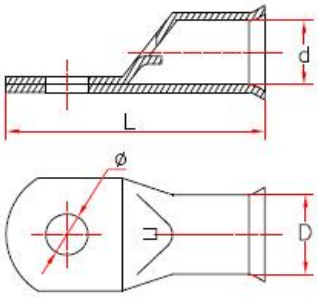

Item No.	Φ±0.5	D±0.5	d±0.5	L±2
SC(JGB) - 6	Φ5.2 , Φ6.2 , Φ8.2	5.5	4.1	24
SC(JGB) - 10	Φ6.2 , Φ8.2	6.5	5.1	28
SC(JGB) - 16	Φ6.2 , Φ8.2 , Φ10.5	8.0	6.4	33
SC(JGB) - 25	Φ6.2 ,Φ8.2 , Φ10.5	9.0	7.0	36
SC(JGB) - 35	Φ6.2 , Φ8.2 , Φ10.5 , Φ12.5	10.5	8.5	42
SC(JGB) - 50	Φ8.2 , Φ10.5 , Φ12.5	12.0	9.8	49
SC(JGB) - 70	Φ8.2 , Φ10.5 , Φ12.5	14.5	11.9	55
SC(JGB) - 95	Φ10.5 , Φ12.5	16.0	13.0	60
SC(JGB) - 120	Φ12.5 , Φ16.5	19.0	15.4	67
SC(JGB) - 150	Φ12.5 , Φ16.5	20.5	16.7	73
SC(JGB) - 185	Φ16.5	23.5	19.3	78
SC(JGB) - 240	Φ16.5	26.0	21.1	92
SC(JGB) - 300	Φ16.5 , Φ20.5	30.0	24.0	102
SC(JGB) - 400	Φ16.5 , Φ20. 5	34.0	27.6	113
SC(JGB) - 500	Φ16.5 , Φ20.5	38.0	31.6	123
SC(JGB) - 630	Φ20.5	45.0	37.6	145

SC(JGK) Copper Crimp Lug

DESCRIPTION

Features:

1) Have a viewing window to check the location of the conductor.

2) Material: CU≥99.9%

3)Surface: electro tin plated.

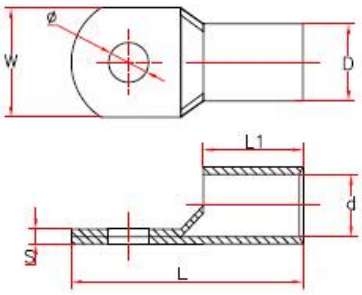

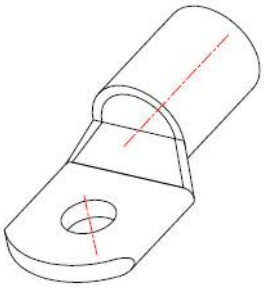

Item No.	Φ±0.5	D±0.5	d±0.5	L±2	L1±2	S±0.2	W±1.5	Weight(g)
SC(JGK)-1.5	Φ4.2, Φ5.2,Φ6.2	3.5	2.5	18.0	/	/	/	0.7
SC(JGK)-2.5	Φ4.2, Φ5.2,Φ6.2	4.0	3.0	19.0	/	/	/	0.8
SC(JGK)-4	Φ4.2, Φ5.2,Φ6.2	5.0	4.0	20.0	/	/	/	1.0
SC(JGK)-6	Φ6.5	6.0	4.8	24.5	8.5	1.2	9.0	1.9
SC(JGK)-6	Φ8.5	6.0	4.8	24.5	8.5	0.8	11.8	1.9
SC(JGK)-10	Φ6.5	6.6	5.2	27.0	9.0	1.2	9.7	2.2
SC(JGK)-10	Φ8.5	6.6	5.2	27.0	9.0	0.9	11.6	2.2
SC(JGK)-16	Φ6.5, Φ8.5	8.0	6.1	31.0	11.0	1.9	11.6	4.5
SC(JGK)-16	Φ10.5	8.0	6.1	31.0	11.0	1.5	14.0	4.5
SC(JGK)-25	Φ6.5, Φ8.5,Φ10.5	9.0	6.8	33.0	13.0	2.0	13.0	6.2
SC(JGK)-35	Φ6.5, Φ8.5,Φ10.5	10.5	8.5	38.0	14.0	2.0	15.5	9.0
SC(JGK)-35	Φ12.5	11.0	8.8	38.0	14.0	2.0	16.5	9.0
SC(JGK)-50	Φ8.5,Φ10.5,Φ12.5	12.5	10.1	45.0	17.0	2.4	18.3	14.8
SC(JGK)-70	Φ8.5,Φ10.5,Φ12.5	14.5	12.0	49.0	18.0	2.6	21.4	21.0
SC(JGK)-95	Φ8.5,Φ10.5,Φ12.5,Φ14.5	17.0	13.8	56.0	20.5	3.0	25.0	34.0
SC(JGK)-120	Φ10.5,Φ12.5	19.0	15.5	61.0	24.0	3.5	28.0	52.0
SC(JGK)-150	Φ10.5,Φ12.5,Φ14.5,Φ16.5	21.0	16.8	68.0	26.0	4.0	31.0	67.0
SC(JGK)-185	Φ12.5,Φ14.5,Φ16.5	24.0	18.9	76.0	28.0	5.0	34.7	103.0
SC(JGK)-240	Φ12.5,Φ14.5,Φ16.5	26.9	21.5	89.0	33.0	5.5	39.0	154.0
SC(JGK)-300	Φ16.5	30.0	23.9	98.0	38.0	6.0	43.3	210.0
SC(JGK)-400	Φ16.5	31.9	25.7	110	41.0	6.0	47.0	300.0
SC(JGK)-500	Φ20.5	38.0	30.0	116	42.0	8.0	55.0	425.0
SC(JGK)-630	Φ20.5/	45.0	36.3	135	53.5	8.6	65.0	650.0
SC(JGK)-800	Φ22.5	50.0	41.0	170	/	/	/	1000.0
SC(JGK)-1000	Φ22.5	55.0	46.0	200	/	/	/	1330.0

SC(JGY/JM) Copper Crimp Lug

DESCRIPTION

Application:

JGY/JM Copper Copper Crimp Lugs are suitable for the connection of copper conductors(section 6-630mm2) in power cable with electronic equipment.

Features:

1.Have a viewing window to check the location of the conductor.

2.Material: CU≥99.9%

3.Surface: electro tin plated

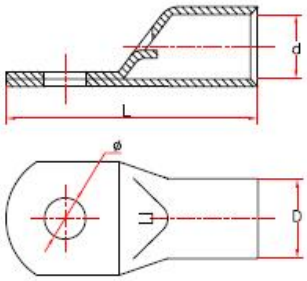

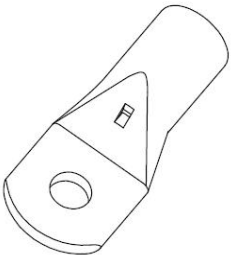

Item No.	Φ±0.5	D±0.5	d±0.5	L±2	Weight(g)
SC(JGY/JM) - 6	Φ5.2 , Φ6.2 , Φ8.2	5.5	4.1	24	2.3
SC(JGY/JM) - 10	Φ6.2 , Φ8.2	6.5	5.1	28	3.0
SC(JGY/JM) - 16	Φ6.2 , Φ8.2 , Φ10.5	8.0	6.4	33	5.5
SC(JGY/JM) - 25	Φ6.2 , Φ8.2 , Φ10.5	9.0	7.0	36	7.1
SC(JGY/JM) - 35	Φ6.2 , Φ8.2 , Φ10.5 , Φ12.5	10.5	8.5	42	11.0
SC(JGY/JM) - 50	Φ8.2 , Φ10.5 , Φ12.5	12.0	9.8	49	14.0
SC(JGY/JM) - 70	Φ8.2 , Φ10.5 , Φ12.5	14.5	11.9	55	25.0
SC(JGY/JM) - 95	Φ10.5 , Φ12.5	16.0	13.0	60	35.0
SC(JGY/JM) - 120	Φ12.5 , Φ16.5	19.0	15.4	67	55.0
SC(JGY/JM) - 150	Φ12.5 , Φ16.5	20.5	16.7	73	66.0
SC(JGY/JM) - 185	Φ16.5	23.5	19.3	78	90.0
SC(JGY/JM) - 240	Φ16.5	26.0	21.1	92	133.0
SC(JGY/JM) - 300	Φ16.5 , Φ20.5	30.0	24.0	102	210.0
SC(JGY/JM) - 400	Φ16. 5 , Φ20. 5	34.0	27.6	113	290.0
SC(JGY/JM) - 500	Φ16. 5 , Φ20.5	38.0	31.6	123	371.0
SC(JGY/JM) - 630	Φ20. 5	45.0	37.6	145	575.0

AUS Copper Crimp Lug to DIN

DESCRIPTION

Features:

1.According to DIN 46235, good quality.

2.Clear markings on barrel to indicate correct crimping location.

3.Material: Cu≥99.9%

4.Surface: electro tin plated

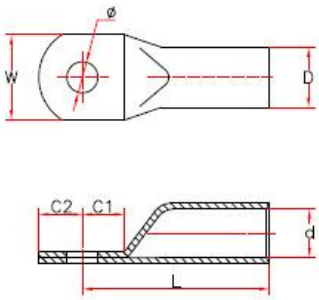

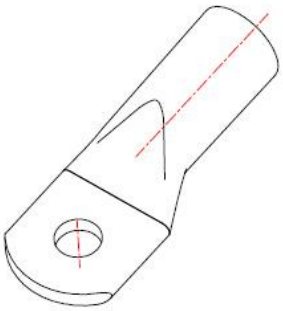

Item No.	Φ±0.5	D±0.5	d±0.5	L±2	C1±0.5	C2±0.5	W±1.5
AUS-10	Φ6.5, Φ8.5	6.5	5.0	29.0	8	8	9.5
AUS-16	Φ6.5, Φ8.5	8.0	6.0	36.5	10	10	11.5
AUS-25	Φ6.5, Φ8.5,Φ10.5	10.5	8.0	36.5	12	12	15.3
AUS-35	Φ8.5,Φ10.5	12.5	9.5	41.5	13	13	18.0
AUS-50	Φ8.5,Φ10.5, Φ12.5	14.5	11.0	54.0	15	15	20.5
AUS-70	Φ8.5,Φ10.5, Φ12.5	16.5	13.0	57.0	15	15	24.0
AUS-95	Φ10.5, Φ12.5,Φ14.5	19.0	14.5	63.0	15	15	27.5
AUS-120	Φ10.5, Φ12.5,Φ14.5	20.5	16.0	68.0	16	16	30.0
AUS-150	Φ10.5, Φ12.5,Φ14.5	23.5	18..0	79.0	16	16	34.0
AUS-185	Φ10.5, Φ12.5,Φ14.5	26.0	20.5	82.0	17	17	38.0
AUS-240	Φ10.5, Φ14.5	28.0	22.5	90.0	21	21	41.0
AUS-300	Φ16.5	30.0	23.5	99.0	21	21	43.0

SCLB Long Barrel Copper Cable Lug

DESCRIPTION

The lugs are made from high conductivity annealed copper which gives the best electrical properties possible.

Features:

1.Material:copper-99.9%pure.
2.Operating Temperature:-55℃to 155C due to oxygen-free copper
3.Surface: Tin plated.
4.Conformant Standards:IEC(Fra.) DIN/VDE(Ger.)

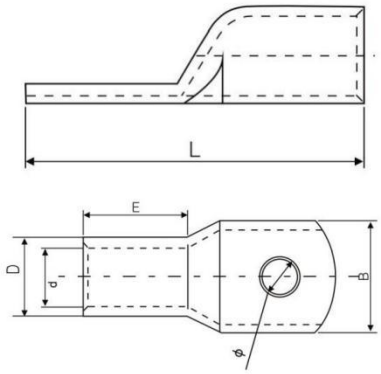

Item No.	Dimensions mm					
	Ø	D	d	B	E	L
SCLB-10-6	6.5	6.6	4.5	11	22	39
SCLB-16-8	8.5	7.5	5.5	12.5	22	39.7
SCLB-25-8	8.5	9.1	6.7	13	28	47.2
SCLB-35-10	10.5	11	8.6	17	31	56.5
SCLB-50-10	10.5	12.4	9.5	18	32	59
SCLB-70-12	12.5	15	12	22	36.5	67.4
SCLB-95-12	12.5	17	13.4	25	37.5	69.7
SCLB-120-14	14.5	19	15	27.5	38	79
SCLB-150-14	14.5	21.2	16.5	30	42	82
SCLB-185-14	14.5	23	19	34	45	91.2
SCLB-240-16	16.5	26.5	21	38.6	53	106.4
SCLB-300-16	16.5	30	24.5	43.8	57	113
SCLB-400-20	20.5	31	27	50	59	119

CL-2H Long Palm Copper Cable Lug(2 Holes)

DESCRIPTION

The lugs are made from high conductivity annealed copper which gives the best electrical properties possible.

Features:

1.Material:copper-99.9%pure.
2.Operating Temperature: -55°C to 155°C due to oxygen-free copper
3.Surface: Tin plated.
4.Conformant Standards:IEC(Fra.) DIN/VDE(Ger.)

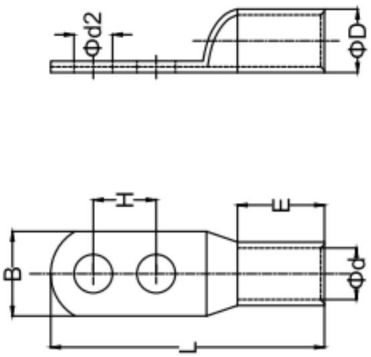

Item No.	Dimensions mm						
	Ød2	B	L	ØD	Ød	E	H
CL14-2HM6	6.4	13	117.5	8.8	5.8	28.5	45
CL22-2HM8	8.4	16	119.2	11.3	7.7	28.5	45
CL38-2HM10	10.5	18.3	120	12.4	9.8	31.7	45
CL60-2HM10	10.5	20.5	130	14	11	40	45
CL70-2HM10	10.5	21.4	130	15	12	40	45
CL80-2HM12	13	23.2	130	16	13	40	45
CL100-2HM12	13	26	132	18	14	42	45
CL125-2HM12	13	29	135	20	16	42	45
CL150-2HM12	13	31.5	150	22	17	50	45
CL185-2HM12	13	33	150	23	18.2	50	45
CL200-2HM12	13	37	150	26	20	52.5	45
CL250-2HM12	13	40	150	28	22	50	45
CL325-2HM12	13	46	180	32	25	58	45
CL400-2HM12	13	54	180	37	30	60	45
CL500-2HM12	13	57.5	180	40	31	60	45

AL-2H Long Palm Aluminum Cable Lug(2 Holes)

DESCRIPTION

The lugs are made from high conductivity annealed aluminum which gives the best electrical properties possible.

Features:

1.Material:aluminum-99.9%pure.
2.Operating Temperature: -55°C to 155°C due to oxygen-free copper
3.Conformant Standards:IEC(Fra.) DIN/VDE(Ger.)

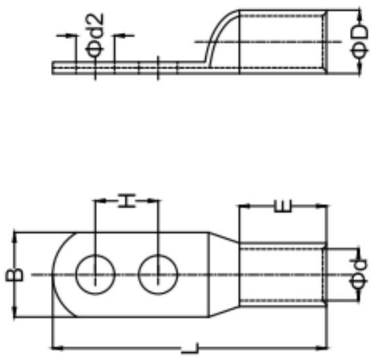

Item No.	Dimensions mm						
	Ød2	B	L	ØD	Ød	E	H
AL14-2HM6	6.4	13	117.5	8.8	5.8	28.5	45
AL22-2HM8	8.4	16	119.2	11.3	7.7	28.5	45
AL38-2HM10	10.5	18.3	120	12.4	9.8	31.7	45
AL60-2HM10	10.5	20.5	130	14	11	40	45
AL70-2HM10	10.5	21.4	130	15	12	40	45
AL80-2HM12	13	23.2	130	16	13	40	45
AL100-2HM12	13	26	132	18	14	42	45
AL125-2HM12	13	29	135	20	16	42	45
AL150-2HM12	13	31.5	150	22	17	50	45
AL185-2HM12	13	33	150	23	18.2	50	45
AL200-2HM12	13	37	150	26	20	52.5	45
AL250-2HM12	13	40	150	28	22	50	45
AL325-2HM12	13	46	180	32	25	58	45
AL400-2HM12	13	54	180	37	30	60	45
AL500-2HM12	13	57.5	180	40	31	60	45

SC-2H Copper Cable Lug(2 Holes)

The lugs are made from high conductivity annealed copper which, gives the best electrical properties possible

Material: copper-99.9% pure.

Surface: Tin plated

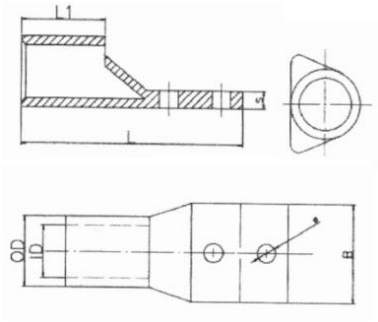

Item No.	Dimension mm						
	O.D	I.D	L	L1	S	B	Ø
SC-2H-500	39.5	30.5	125	45	9.2	56	10.5

SC-4H Copper Cable Lug(4 Holes)

The lugs are made from high conductivity annealed copper which, gives the best electrical properties possible

Material: copper-99.9% pure.

Surface: Tin plated

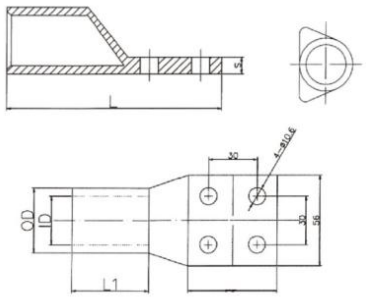

Item No.	Dimension mm				
	O.D	I.D	L	L1	S
SC-4H-300	28.6	23.4	121	46	5.2
SC-4H-400	32.8	26.8	122	46	6
SC-4H-500	40	30	127	48	10
SC-4H-630	44.7	34.5	145	60	10.2
SC-4H-800	52	40	146	65	12
SC-4H-1000	56	43	200	88	13

T45° Bend Copper Cable Lug

DESCRIPTION

The lugs are made from high conductivity annealed copper which, gives the best electrical properties possible

Features:

1.Material: copper-99.9% pure.
2.Surface: Tin plated

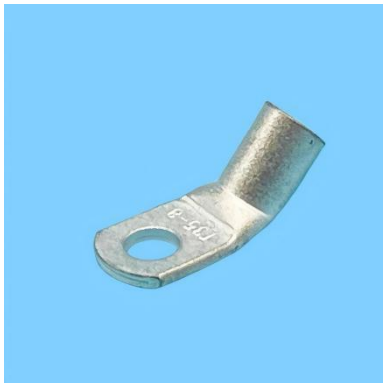

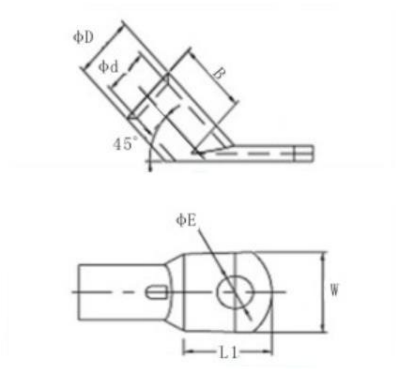

Item No.	Dimensions mm					
	ØE	ØD	Ød	W	B	L
T45-10/6	6.4	6.9	4.7	11.9	11	12.5
T45-16/8	8.3	7.8	5.6	13.5	12	15
T45-25/8	8.3	9.5	7.1	14	13	16
T45-35/10	10.5	11	8.2	16.5	16	22
T45-50/10	10.5	12.5	9.5	17.9	20	22
T45-70/12	13	15	11.5	21.5	21	22
T45-95/12	13	17	13.5	24.7	24	33
T45-120/14	14.5	20	15.6	28.9	27	33
T45-150/14	14.5	21	16.5	30.4	32	33
T45-185/16	16.5	23.6	18.4	34	34	35
T45-240/16	16.5	26.4	21.2	38.5	38	35

T90° Bend Copper Cable Lug

DESCRIPTION

The lugs are made from high conductivity annealed copper which, gives the best electrical properties possible

Features:

1.Material: copper-99.9% pure.
2.Surface: Tin plated

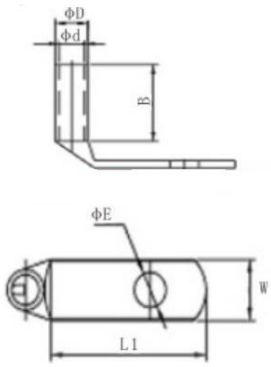

Item No.	Dimensions mm					
	ØE	ØD	Ød	W	B	L
T90-10/6	6.4	6.9	4.7	11.9	10.5	12.5
T90-16/8	8.3	7.8	5.6	13.5	11	15.5
T90-25/8	8.3	9.5	7.1	14	13	16
T90-35/10	10.5	11	8.2	16.5	16	22
T90-50/10	10.5	12.5	9.5	17.9	20	22
T90-70/12	13	15	11.5	21.5	21	22
T90-95/12	13	17	13.5	24.7	24	33
T90-120/14	14.5	20	15.6	28.9	27	33
T90-150/14	14.5	21	16.5	30.4	32	33
T90-185/16	16.5	23.6	18.4	34	34	35
T90-240/16	16.5	26.4	21.2	38.5	38	35

AWG Bell Mouth Copper Crimp Lug(Australia Standard)

DESCRIPTION

The lugs are made from high conductivity annealed copper which, gives the best electrical properties possible

Features:

1.Material: copper-99.9%pure
2.Operating Temperature: -55°C to 155°C due to oxygen-free copper
3.Surface: Tin plated

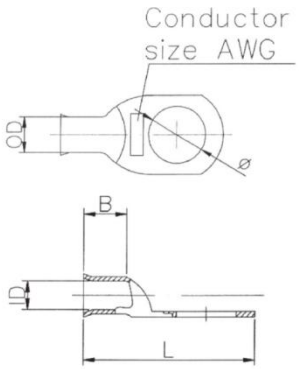

Item No.	Dimension mm					
	O.D	I.D	L	B	Ø	Conductor Size AWG
5600	7.5	5	30	7.5	10.5	8#
5601	8.8	6	33.5	9	10.5	6#
5603	12.2	8.7	41	14	10.5	2*3/8
5604	13.7	9.3	44	15	10.5	1*3/8
5605	14	10.3	47	18	10.5	1/0
5606	14	10.3	47	18	13.5	1/0
5607	15.7	11.7	52	18	9.5	2/0
5608	15.7	11.7	52	18	13.5	2/0
5609	17.5	13	57	20	10.5	3/0
5610	17.5	13	57	20	13.5	3/0
5611	18.7	14.2	58.5	20	10.5	4/0

C45 Copper Pin Terminal

DESCRIPTION

The lugs are made from high conductivity annealed copper which, gives the best electrical properties possible

Features:

1.Material: copper-99.9%pure
2.Operating Temperature: -55°C to 155°C due to oxygen-free copper
3.Surface: Tin plated

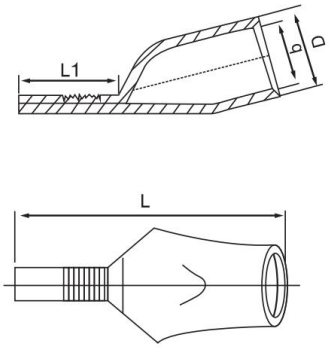

Item No.	Dimension mm			
	D	d	L	L1
C45-4	5	3	26	10
C45-6	6	4	26	10
C45-10	7	5	34	13.5
C45-16	9	6	35	14
C45-25	9	7	38	14.5
C45-35	10.5	8.2	42	15
C45-50	12.5	10	47	15.5
C45-70	15	12	51	16
C45-95	17	15	56	18
C45-120	19	15	57	20

OT Copper Open Norse Lug

DESCRIPTION

The lugs are made from high conductivity annealed copper which, gives the best electrical properties possible

Features:

1.Material: copper-99.9%pure
2.Operating Temperature: -55°C to 155°C due to oxygen-free copper
3.Surface: No plated or Tin plated

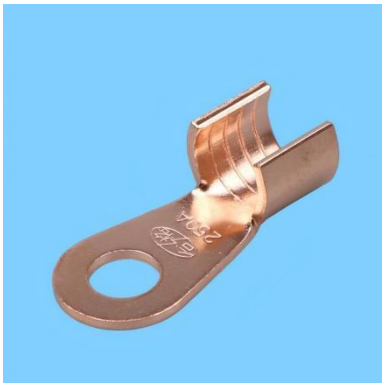

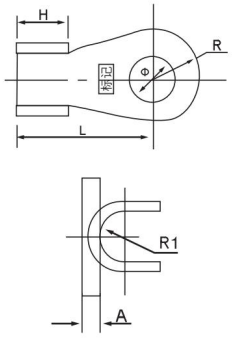

Item No.	Dimensions mm					
	Ø	H	L	R	R1	A
OT-10A	5.2	6	14.5	4.5	2	0.8
OT-20A	6.2	7	17	5.5	2.5	1
OT-30A	6.2	8.2	19	5.8	3.2	1.2
OT-40A	6.2	9	19.5	6.2	3.5	1.2
OT-50A	6.2	9	21.5	6.5	3.5	1.2
OT-60A	8.2	10	23	7	4	1.4
OT-80A	8.2	11	25	8	4.5	1.5
OT-100A	8.2	12	29	8.5	5	1.5
OT-150A	10.2	12	31	9	5.5	1.6
OT-200A	10.2	14	33	10	6	1.7
OT-250A	10.2	15.5	36	10.5	6.5	2
OT-300A	12.2	16	40	11.5	7	2
OT-400A	14.2	18	43	13	8	2.2
OT-500A	14.2	20	46	14.5	8.5	2.4
OT-600A	16.2	22	50.5	16	10.2	2.8
OT-800A	18.2	26	61	17.5	12.5	3.2
OT-1000A	18.2	33	66	20.5	15.5	3.8

DL Aluminium Crimp Lug

DESCRIPTION

Feature:

1. Material: AL≥99.5%

2. Application: low voltage

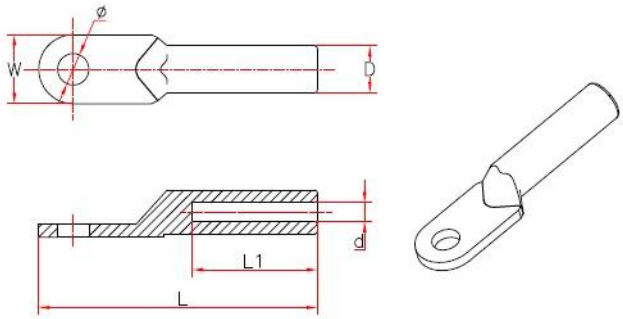

Item No.	Φ±0.5	D±0.5	d±0.3	L±2	L1±2	W±1	Weight(g)
DL-10	8.5	10	5.2	65	30	16	/
DL-16	8.5	10	6.1	70	31	16	11
DL-25	8.5	12	7.1	75	35	18	15
DL-35	10.5	14	8.5	85	38	20.5	20
DL-50	10.5	16	9.8	90	42	23	30
DL-70	12.5	18	11.5	102	47	26	41
DL-95	12.5	21	13.5	112	51	28	60
DL-120	14.5	23	15.0	120	53	30	75
DL-150	14.5	25	17.0	126	56	34	90
DL-185	16.5	27	18.6	133	58	37	110
DL-240	16.5	30	21.5	140	60	40	140
DL-300	18.0	34	24.0	165	66	50	220
DL-400	21.0	38	27.0	178	76	50	/
DL-500	21.0	45	30.0	200	85	60	/
DL-630	21.0	50	34.2	225	85	80	

DLS Aluminium Crimp Lug(2 Holes)

DESCRIPTION

Feature:

1. Material: AL≥99.5%

2. Application: low voltage

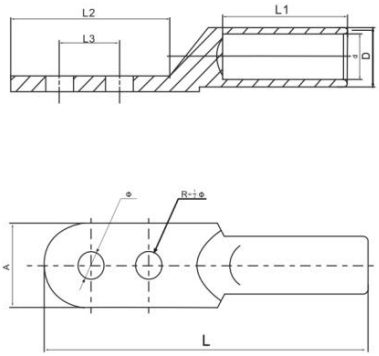

Item No.	Ø	D	d	L1	L	A	L2	L3
DLS-10	8.5	9	5.5	28	81	16	41	20
DLS-16	8.5	10	6.5	32	87	16	41	20
DLS-25	8.5	11	7.4	34	88	18	41	20
DLS-35	8.5	12	8.4	37	100	23	48	20
DLS-50	8.5	14	10	40	106	23	51	20
DLS-70	10.5	16	11.8	43	118	28	56	25
DLS-95	10.5	18	13.5	49	126	28	57	25
DLS-120	13	20	15	50	138	34	66	30
DLS-150	13	22	17	56	140	34	66	30
DLS-185	13	25	19	56	152	40	70	35
DLS-240	13	27	21	62	158	40	70	35
DLS-300	17	30	23.5	68	175	45	80	45
DLS-400	17	34	27	70	185	50	82	45
DLS-500	17	38	29.2	82	218	60	100	45
DLS-630	17	45	34.5	87	227	60	100	45

AU Aluminium Crimp Lug to Din Standard

DESCRIPTION

Application:

AU aluminium lugs are suitable for the conjunction of wires cable in the distribution equipment and the electrical equipment.

Features:

1.Clear markings on barrel to indicate correct crimping location.

2.In accordance with DIN46329.

3.The solid palm eliminates the ingress of moisture.

4.Prefilled with jointing compound and sealed with caps.

5.Material: AL≥99.5%

6.Surface: electro tin plated.

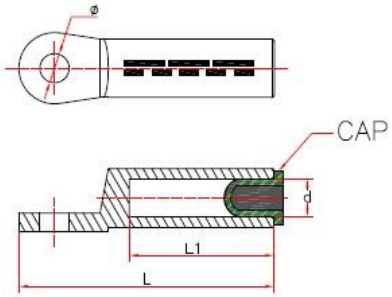

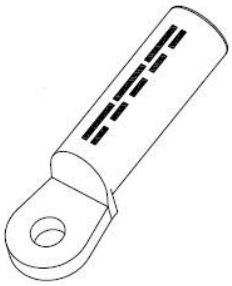

Item No.	Φ±0.5	d±0.3	L±2	L1±2
AU-16	8.4	5.8	60.0	29
AU-25	10.5	6.8	62.5	29
AU-35	10.5	8.0	77.0	41
AU-50	10.5	9.8	78.5	42
AU-70	10.5	11.2	85.0	51
AU-95	13.0	13.2	90.0	55
AU-120	13.0	14.7	96.0	55
AU-150	13.0	16.3	106	59
AU-185	13.0	18.3	108	59
AU-240	17.0	21.0	124	69
AU-300	17.0	23.3	125	69

BLMT Bolt Type Mechanical Lug

DESCRIPTION

Feature:

1.Mechanical Lug, No needs of crimping tools and the attendant operator skill.
2.Only a socket spanner or a wrench is needed.
3.Torque controlled sheared off bolts guarantee a good electrical contact.
4.Wide application Range.
5.The solid palm eliminates the ingress of moisture.
6.Prefilled with jointing compound.
7.Material: Al≥99.5%
8.Surface: Electro tin plated

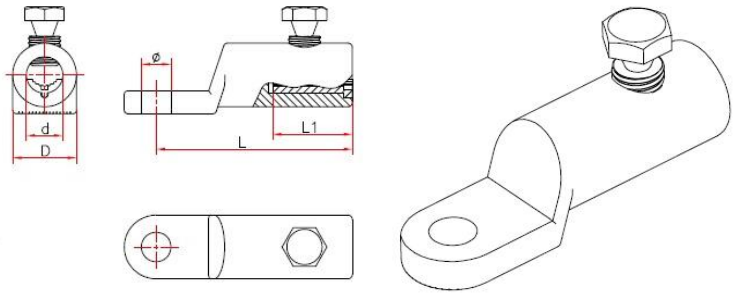

Item No.	Cross section (mm2)	φ±0.3	D±0.2	d±0.2	L±2	L1±2	Terminal stud quantity
BLMT-25/95	25-95	φ13,φ17	24	12.8	60	30	1
BLMT-35/150	35-150	φ13,φ17	28	15.8	86	35	1
BLMT-95/240	95-240	φ13,φ17,φ21	33	20.0	112	60	2
BLMT-120/300	120-300	φ13,φ17	37	24.0	115	65	2

BSMB Bolt Type Mechanical Lug

DESCRIPTION

Feature:

1. Mechanical Connector, No needs of crimping tools and the attendant operator skill.
2.Only a socket spanner or a wrench is needed.
3.Torque controlled sheared off bolts guarantee a good electrical contact.
4.Wide application Range.
5.Prefiled with jointing compound.
6.Material: Aluminium Alloy
7.Surface: Electro tin plated

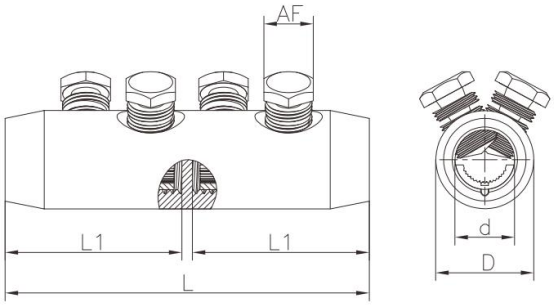

Item No.	Cross Section (mm²)	L	L1	D	d	Bolt No.	AF
BSMB-10/35	10-35	45	20	19	8.5	2	10
BSMB-25/95	25-95	65	30	24	12.8	2	13
BSMB-35/150	35-150	80	35	28	15.8	2	17
BSMB-95-240	95-240	125	60	37	20	4	19
BSMB-120/300	120-300	140	65	39	24	4	22

DTLL Bolt Type Bimetallic Lug(CU/AL)

DESCRIPTION

Feature:

1.Mechanical Lug, No needs of crimping tools and the attendant operator skill.
2.Only a socket spanner or a wrench is needed.
3.Torque controlled sheared off bolts guarantee a good electrical contact.
4.Wide application Range.
5.The solid palm eliminates the ingress of moisture.
6.Prefilled with jointing compound.
7.Material:CU≥99.9%, Al≥99.5%

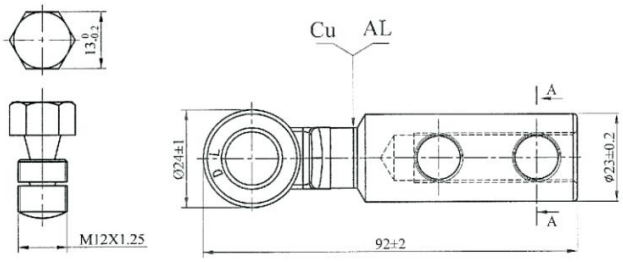

Item No.	Cross Section(mm²)	A	B	C	Bolt
DTLL-16/70-12/B	16/70	Ø24±1	92±2	Ø23±0.2	M12 x 1.25
DTLL-50/150-12/B	50/150	Ø30±1	108±2	Ø28±0.2	M12 x 1.25
DTLL-95/240-16/B	95/240	Ø35±1	129±2	Ø34±0.2	M16 x 1.25
DTLL-185/240-16/B	185/400	Ø50±1	196±3	Ø44±0.2	M16 x 1.25

GL-1 Aluminium Crimp Connector

DESCRIPTION

Application:

GL-1 Aluminum Connectors Tube is suitable for connecting the circular wire and hemicycle wire in distribution equipment or power supply cables.

Features:

1.GL-1 Aluminum Connectors Tube is suitable for aluminum conductor

2.The barrels capped are filled with joint compound to avoid oxidization.

3.Material: AL≥99.5%

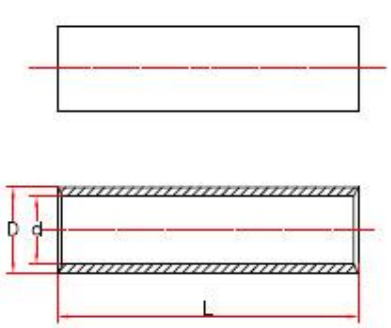

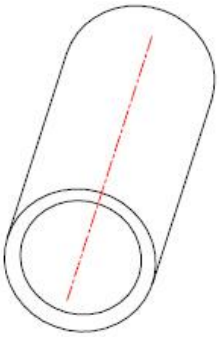

Item No.	D±0.5	d±0.3	L±2
GL-1-10	9	5.0	53
GL-1-16	10	6.0	60
GL-1-25	11	7.5	62
GL-1-35	12	8.5	66
GL-1-50	15	11.0	72
GL-1-70	17	12.4	82
GL-1-95	19	14.0	86
GL-1-120	21	15.6	92
GL-1-150	23	17.6	96
GL-1-185	25	19.4	103
GL-1-240	27	21.0	113
GL-1-300	32	24.0	125
GL-1-400	37	27.0	150

GL-2 Aluminium Connector (Oil and Water Proof)

DESCRIPTION

Application:

GL-2 Aluminum Connectors Tube(Oil and Water Stop) is suitable for connecting the circular wire and hemicycle wire in distribution equipment or power supply cables.

Features:

1.GL-2 Aluminum Connectors Tube is suitable for aluminum conductor.

2.Oil and Water Stop.

3.The barrels capped are filled with joint compound to avoid oxidization.

4.Material: AL≥99.5%

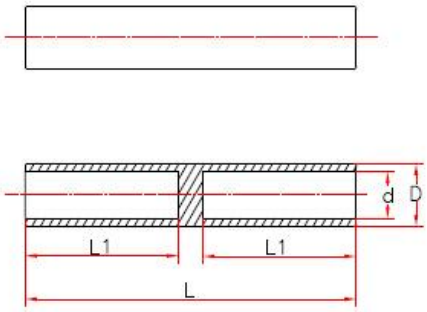

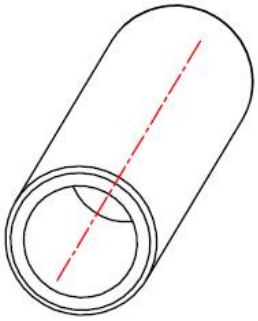

Item No.	D±0.2	d±0.2	L±2	L1±2
GL-2-16	11	6.1	70	30
GL-2-25	12	7.1	75	32
GL-2-35	14	8.5	85	37
GL-2-50	16	9.8	95	43
GL-2-70	18	11.5	105	47
GL-2-95	21	13.5	110	50
GL-2-120	23	15.0	115	53
GL-2-150	25	16.5	120	55
GL-2-185	27	18.5	125	57
GL-2-240	30	21.0	130	60
GL-2-300	34	23.5	140	65
GL-2-400	38	26.0	160	70

GLB Medium Voltage 10-33KV Aluminum Splice

DESCRIPTION

Features:

Filled with neutral grease, extremities closed by a protection cap.
IEC 61238 Standard

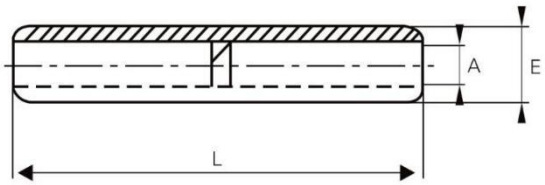

Item No.	Conductor Size mm²	Dimensions mm		
		A	E	L
GLB-16	16	5.5	16	91
GLB-25	25	6.5	16	91
GLB-35	35	8	16	91
GLB-50	50	9	20	107
GLB-70	70	11	20	107
GLB-95	95	12.5	20	107
GLB-120	120	13.7	25	133.5
GLB-150	150	15.5	25	133.5
GLB-185	185	17	32	144
GLB-240	240	19.5	32	144
GLB-300	300	23.3	40	218.5
GLB-400	400	26	40	218.5
GLB-500	500	29.1	47	219
GLB-630	630	32.5	47	219

GT-1 Copper Crimp Connector(Passing Through)

DESCRIPTION

Application:

GT-1 copper crimp connector(passing through) is suitable for connecting the circular wire and hemicycle-sector wire in distribution equipment of power supply cables.

Features:

1.Size:10mm-400mm or according to customer's drawings;

2.Keeps wire strands together and prevents strands from being severely damaged, so as to make good permanent connection.

3.Material: CU≥99.9%

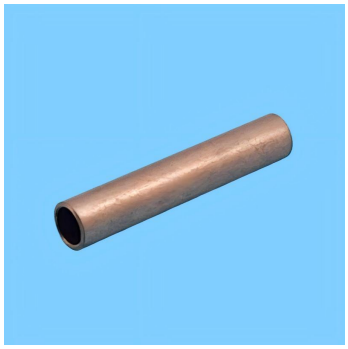

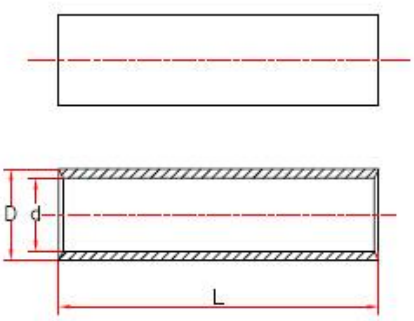

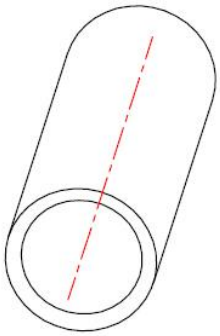

Item No.	D±0.5	d±0.3	L±2
GT-1-10	8	5.6	50
GT-1-16	9	6.6	56
GT-1-25	10	7.6	60
GT-1-35	11	8.6	64
GT-1-50	13	10.4	72
GT-1-70	15	12.0	78
GT-1-95	17	14.0	85
GT-1-120	19	15.0	90
GT-1-150	21	17.0	94
GT-1-185	24	19.0	100
GT-1-240	26	21.0	110
GT-1-300	28	23.0	120
GT-1-400	32	26.5	130

GT-2 Copper Crimp Connector(Oil and Water Proof)

DESCRIPTION

Application:

GT-2 copper connecting tubes (oil and water stop) are suitable for connecting the circular wire and hemicycle-sector wire in distribution equipment of power supply cables.

Features:

1.Oil and water stop

2.Material: CU≥99.9%

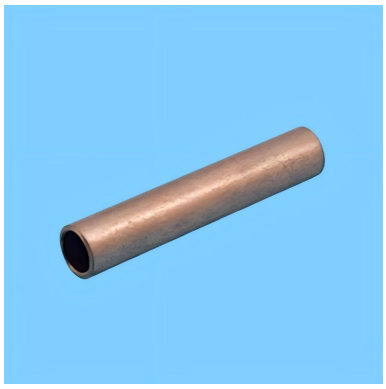

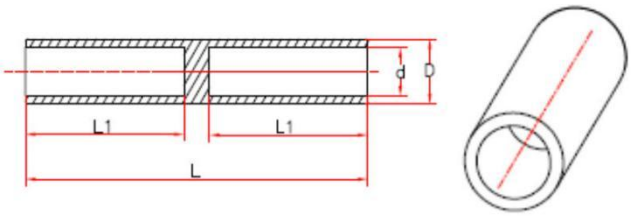

Item No.	D±0.5	d±0.3	L±2	L1±2
GT-2-16	10	6.1	65	30
GT-2-25	11	7.1	70	32
GT-2-35	12	8.5	75	34
GT-2-50	14	9.8	80	36
GT-2-70	16	11.5	90	42
GT-2-95	18	13.5	95	44
GT-2-120	20	15.0	100	47
GT-2-150	22	17.0	105	49
GT-2-185	25	18.6	110	50
GT-2-240	27	21.5	120	55
GT-2-300	31	24.0	130	60
GT-2-400	34	27.0	140	65

DGT Copper Crimp Connector to DIN Standard

DESCRIPTION

Application:

DGT Copper Crimp Connector to DIN is suitable for stranded conductors with butt marks for precise cable insertion.

Feature:

1.For use with oil filled cable; Solid centre barriers.

2.Cable area clear identified on the lug.

3.Material: Cu≥99.9%

4.Surface: tin plated

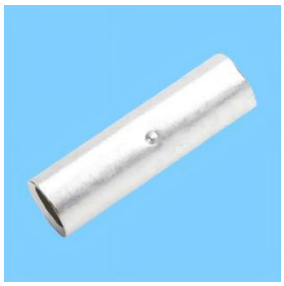

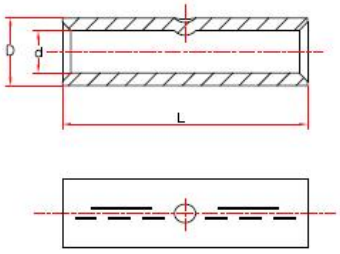

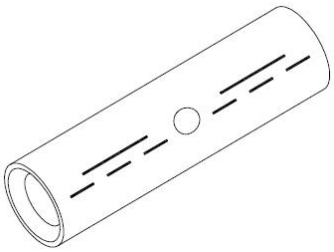

Item No.	D± 0.5	d± 0.3	L± 2	Weight(g)
DGT-10	6	4.5	30	3.7
DGT-16	8.5	5.5	50	14
DGT-25	10	7	50	17
DGT-35	12.5	8.2	50	28
DGT-50	14.5	10	56	38
DGT-70	16.5	11.5	56	56
DGT-95	19	13.5	70	85
DGT-120	21	15.5	70	100
DGT-150	23.5	17	80	141
DGT-185	25.5	19	85	174
DGT-240	29	21.5	90	221

GTY-1 Cable Crimp Connector to DIN Standard

DESCRIPTION

Application:

GTY-1 Cable Crimp Connector to DIN is suitable for stranded conductors with butt marks for precise cable insertion.

Features:

1.For use with oil filled cable; Solid centre barriers.
2.Cable area clear identified on the lug.
3.Material: CU≥99.9%
4.Surface: tin plated

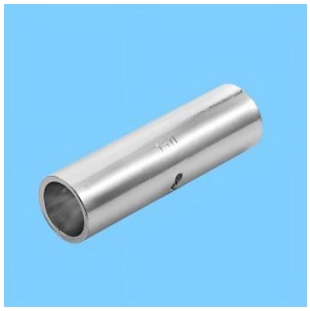

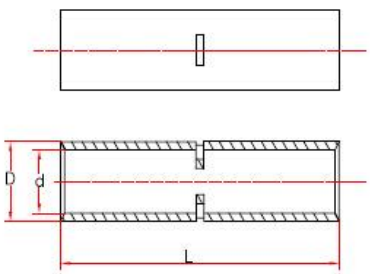

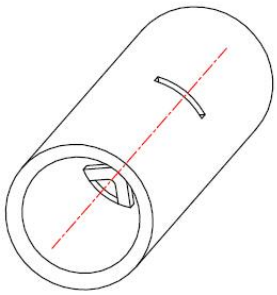

Item No.	D		d		L±2	Weight(g)
GTY-1-10	6.8	+0 -0.12	5.4	+0.3 -0	30	/
GTY-1-16	7.5		6.1		35	/
GTY-1-25	9.0		7.4		40	9.0
GTY-1-35	10.5		8.9		45	12.0
GTY-1-50	12.5	+0 -0.16	9.9	+0.4 -0	50	21.0
GTY-1-70	14.0		11.6		55	30.5
GTY-1-95	17.0		14.2		60	46.5
GTY-1-120	19.5	+0 -0.24	16.5		65	62.5
GTY-1-150	20.5		17.5		70	70.7
GTY-1-185	23.5		20.1		75	/
GTY-1-240	26.0		22.2		80	/
GTY-1-300	30.0	+0 -0.30	25.4	+0.5 -0	85	/
GTY-1-400	34.0		28.6		90	/
GTY-1-500	38.0		32.0		100	/
GTY-1-630	45.0	+0 -0.40	-		110	/

CASR Copper Reducing Connector

DESCRIPTION

Application:

Material:99.9% Pure copper.

It is a barrier type. To be used in the connection between different diameter of copper conductors. Standard: IEC61238, AS/NZS4325

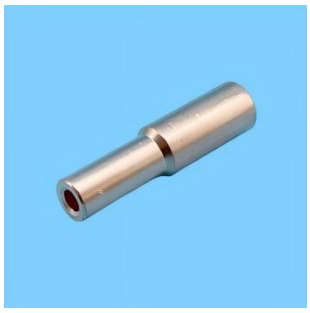

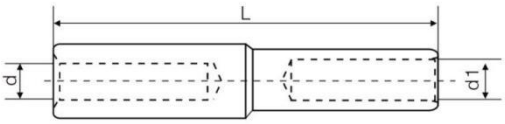

Item No.	Dimensions(mm)		
	L	d	d1
CASR10/6	30	4.5	4
CASR16/10	40	5.5	4.5
CASR25/16	50	7.5	5.5
CASR35/25	60	8.5	7.5
CASR50/35	55	9.5	7.5
CASR70/50	65	11.5	8.5
CASR95/70	70	13.5	11.5
CASR120/95	75	15.5	13.5
CASR150/120	80	16.5	15.5
CASR185/150	85	18.5	16.5
CASR240/185	95	21.5	18.5
CASR300/240	105	23.5	21.5
CASR400/300	125	26.5	23.5
CASR500/400	140	30	26.5
CASR630/500	140	34	30

GTL Friction Welded Connector(CU/AL)

DESCRIPTION

Application:

GTL Bimetallic Crimp Lugs are suitable for aluminum to copper terminations.

Features:

1.Prefilled with jointing compound.

2.Friction welded.

3.Material: CU≥99.9%, AL≥99.5%

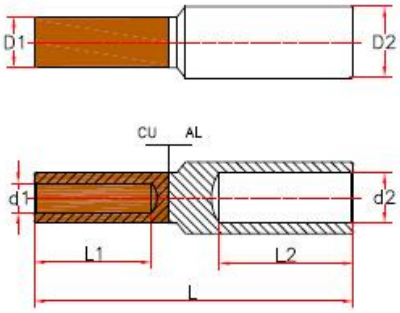

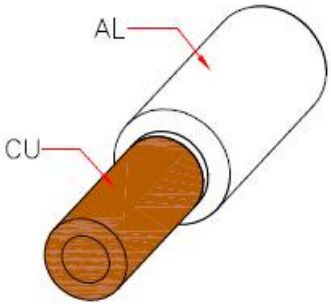

Item No.	D1±0.2	d1±0.2	D2±0.2	d2±0.2	L1±2	L2±2	L±2
GTL-16	9	5.7	10	6.5	25	33	70
GTL-25	10	6.5	12	7.5	27	37	75
GTL-35	11	7.5	14	8.5	29	40	84
GTL-50	12	8.5	16	10.2	30	45	89
GTL-70	14	10.0	18	11.5	35	48	98
GTL-95	16	11.5	21	13.5	38	50	106
GTL-120	18	13.5	23	15.0	40	50	110
GTL-150	20	15.0	25	16.5	43	53	115
GTL-185	22	16.5	27	18.5	45	57	125
GTL-240	24	18.5	30	21.0	48	62	130
GTL-300	27	21.0	34	23.5	53	65	145
GTL-400	30	23.5	38	26.5	60	70	150
GTL-500	34	26.5	44	29.0	64	78	160

GTL-2 Friction Welded Connector(CU/AL)

DESCRIPTION

Application:

GTL-2 Bimetallic Crimp Lugs are suitable for aluminum to copper terminations.

Features:

1.Prefilled with jointing compound.

2.Friction welded.

3.Material: CU≥99.9%, AL≥99.5%

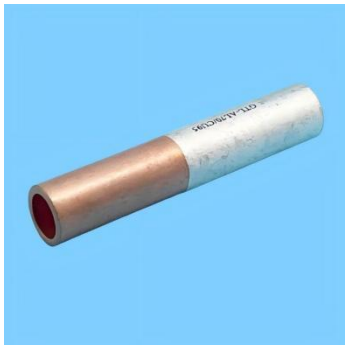

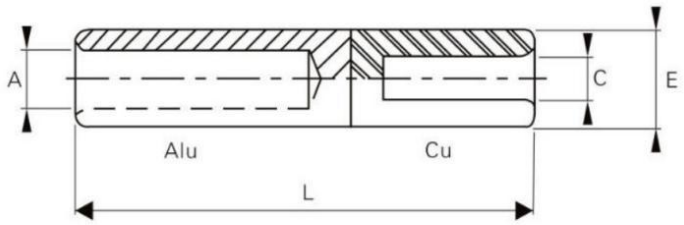

Item No.	Conductor(mm²)		Dimensions(mm)			
	Al	Cu	E	A	C	L
GTL-2-25/25	25	25	16	6.5	7.5	90.5
GTL-2-35/25	35	25	20	8	7.5	106.5
GTL-2-50/35	50	35	20	9	8.5	106.5
GTL-2-50/70	50	70	20	9	11	106.5
GTL-2-70/35	70	35	20	11	8.5	106.5
GTL-2-70/50	70	50	20	11	9.5	106.5
GTL-2-70/70	70	70	20	11	11	106.5
GTL-2-95/50	95	50	20	12.5	9.5	106.5
GTL-2-95/70	95	70	20	12.5	11	106.5
GTL-2-95/95	95	95	20	12.5	13	106.5
GTL-2-120/70	120	70	25	13.7	11	133
GTL-2-120/95	120	95	25	13.7	13	133
GTL-2-120/120	120	120	25	13.7	14.2	133
GTL-2-150/95	150	95	25	15.5	13	133
GTL-2-150/120	150	120	25	15.5	14.2	133
GTL-2-150/150	150	150	25	15.5	16	133
GTL-2-185/95	185	95	32	17	13	143.5
GTL-2-185/120	185	120	32	17	14.2	143.5
GTL-2-185/150	185	150	32	17	16	143.5
GTL-2-185/185	185	185	32	17	18	143.5
GTL-2-240/120	240	120	32	19.5	14.2	143.5
GTL-2-240/150	240	150	32	19.5	16	143.5
GTL-2-240/185	240	185	32	19.5	18	143.5
GTL-2-240/240	240	240	32	19.5	20	143.5
GTL-2-300/185	300	185	40	23.3	18	180
GTL-2-300/240	300	240	40	23.3	22	180
GTL-2-400/240	400	240	40	26	22	180
GTL-2-630/300	630	300	47	32.5	23	218.5

MJPB Pre-insulated Sleeve

DESCRIPTION

Application:

The MJPB Pre-insulated connectors are designed for LV-ABC systems with a neutral messager. The MJPB is used on the neutral conductor.

Features:

1. Clear marks moulded onto the connector body, information including crimping sequence and frequency, cable size, stripping length of cable, crimping die size..
2. Cross-section of conductor can be easily identified by the color code of rings.
3. Elastomeric ring and pre-filled grease enable super waterproof performance.
4. Water tightness test carried out at 6kV for 1 minute under water.
5. Insulation tube is made of weather and UV resistant polymer.
6. Standard: EN 50483-4 ,NFC 33-021

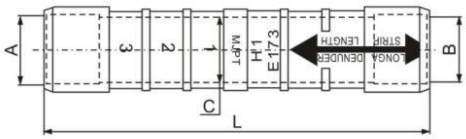

Item No.	Cable Size(mm²)		Plastic Sleeve Diameter(mm)	Length(mm)	Color
	A	B	C	L	
MJPB 16/6	16	6	20	70	Brown/Blue
MJPB 16/10	16	10	20	70	Green/Blue
MJPB 16/16	16	16	20	70	Blue/Blue
MJPB 25/16	25	16	20	70	Blue/Orange
MJPB 25/25	25	25	20	70	Orange
MJPB 35/35	35	35	20	70	Red

MJPT Pre-insulated Sleeve

DESCRIPTION

Application:

The MJPT Pre-insulated connectors are designed for LV-ABC systems with a neutral messager. The MJPT is used on the neutral conductor.

Features:

1. Clear marks moulded onto the connector body, information including crimping sequence and frequency, cable size, stripping length of cable, crimping die size..
2. Cross-section of conductor can be easily identified by the color code of rings.
3. Elastomeric ring and pre-filled grease enable super waterproof performance.
4. Water tightness test carried out at 6kV for 1 minute under water.
5. Insulation tube is made of weather and UV resistant polymer.
6. Standard: EN 50483-4 ,NFC 33-021

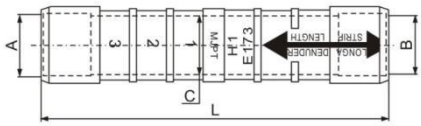

Item No.	Cable Size(mm²)		Plastic Sleeve Diameter(mm)	Length(mm)	Color
	A	B	C	L	
MJPT 16/16	16	16	20	98.5	Blue
MJPT 25/25	25	25	20	98.5	Orange
MJPT 35/35	35	35	20	98.5	Red
MJPT 50/50	50	50	20	98.5	Yellow
MJPT 54.6/54.6	54.6	54.6	20	98.5	Black
MJPT 70/70	70	70	20	98.5	White
MJPT 95/95	95	95	20	98.5	Gray
MJPT 120/120	120	120	20	107.5	Pink
MJPT 150/150	150	150	20	107.5	Purple

MJPTN Pre-insulated Sleeve

DESCRIPTION

Application:

The MJPTN Pre-insulated connectors are designed for LV-ABC systems with a neutral messager. The MJPTN is used on the neutral conductor.

Features:

1. Clear marks moulded onto the connector body, information including crimping sequence and frequency, cable size, stripping length of cable, crimping die size..
2. Cross-section of conductor can be easily identified by the color code of rings.
3. Elastomeric ring and pre-filled grease enable super waterproof performance.
4. Water tightness test carried out at 6kV for 1 minute under water.
5. Insulation tube is made of weather and UV resistant polymer.
6. Standard: EN 50483-4 ,NFC 33-021

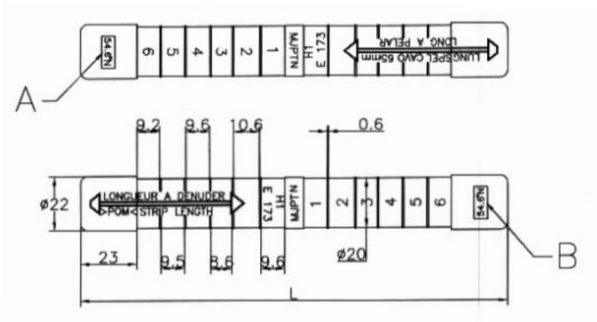

Item No.	Cable Size(mm²)		Length L	Color
	A	B		
MJPTN 54.6/54.6	54.6	54.6	172	Black
MJPTN 70/70	70	70	172	White
MJPTN 95/95	95	95	172	Gray
MJPTN 120/120	120	120	172	Pink
MJPTN 150/150	150	150	172	Purple

GTLA MCB C45 Circuit Breaker Insertion Pin Terminal

DESCRIPTION

Application:

1.GTLA MCB C45 Circuit Breaker Insertion Pin Copper Aluminum Transition Bimetallic Cable Ear Terminal Electrical Connector.
2.Copper-Aluminum Material: Provides superior conductivity and durability for reliable connections.
3.Surface Treatment: Enhanced oxidation resistance ensures longevity in harsh environments.
4.Terminal Connector Type: Ideal for electric meter applications requiring secure and reliable connections.

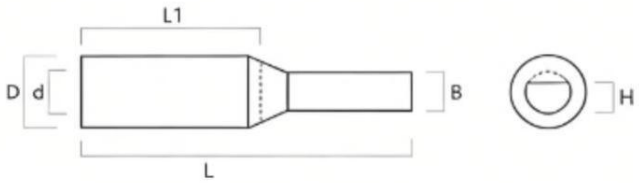

Model	Conductor Cross-sectional Area mm²	D	d	L	L1	B	H
GTLA-10	10	9.9	5.8	51	29	6	5.2
GTLA-16	16	10	6.3	51	29	6	5.2
GTLA-25	25	10.8	6.8	48	27	6	5.5
GTLA-35	35	12	7.5	48	27	6	5.6
GTLA-50	50	13	9.3	52	27	6	5.2
GTLA-70	70	14	10.6	49	25	6	5.3

Note: Product size data are manually measured, and the specific size is subject to the actual product received.

GTLC MCB C45 Circuit Breaker Insertion Pin Terminal

DESCRIPTION

Application:

1.GTLC MCB C45 Circuit Breaker Insertion Pin Copper Aluminum Transition Bimetallic Cable Ear Terminal Electrical Connector.
2.Copper-Aluminum Material: Provides superior conductivity and durability for reliable connections.
3.Surface Treatment: Enhanced oxidation resistance ensures longevity in harsh environments.
4.Terminal Connector Type: Ideal for electric meter applications requiring secure and reliable connections.

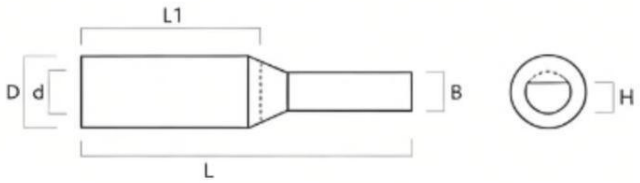

Model	Conductor Cross-sectional Area mm²	D	d	L	L1	B	H
GTLC-10	10	9.9	5.8	44	21	6	4.5
GTLC-16	16	10	6.3	44	21	6	4.9
GTLC-25	25	10.8	6.8	44	19	6	4.7
GTLC-35	35	12	7.5	44	22	6	4.7
GTLC-50	50	13	9.3	44	21	6	4.9
GTLC-70	70	14	10.6	44.5	22	6	4.8

Note: Product size data are manually measured, and the specific size is subject to the actual product received.

DTLC Copper Aluminum Inserting Pin Terminal

DESCRIPTION

Application:

1.DTLC copper aluminum Inserting pin circuit breaker dedicated copper aluminum terminal block, narrow duckbill shaped wire ear.

2.Copper Aluminum Inserting Pin: Connects cables with high conductivity and corrosion resistance.

3.ISO9001 Certified: Ensures quality and reliability for your electrical projects.

4.Oxidation Treatment: Provides durable and long-lasting performance.

5.Surface Finish: Enhances aesthetics and durability of the terminals.

6.Cold Press Wiring: Easy installation for efficient cable connections.

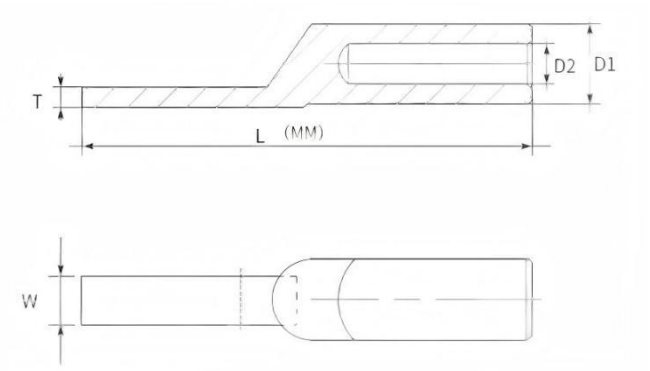

Item No.	T	W	L	D1	D2
DTLC-10	4.8mm	6.7mm	47mm	10mm	6mm
DTLC-16	4.9mm	6.7mm	48mm	10mm	6.5mm
DTLC-25	4.6mm	6.7mm	47mm	11mm	7mm
DTLC-35	5mm	6.7mm	47mm	12mm	8.5mm
DTLC-50	4.9mm	6.8mm	50mm	14mm	10mm
DTLC-70	4.9mm	6.9mm	55mm	16mm	12mm

Note: Product size data are manually measured, and the specific size is subject to the actual product received.

DTA Copper Inserting Pin Terminal

DESCRIPTION

Application:

1.DTA Electrical Equipment Terminals Non-Insulated Crimp Terminal with Meter Circuit Breaker Copper Tinned Lug and Copper Pin.
2.Copper Material: Durable and corrosion-resistant for reliable connections.
3.Antioxidant Treatment: Protects against oxidation for extended lifespan.
4.Crimp Terminal: Secure wire connections for stable electrical circuits.
5.ISO Certified: Ensures quality and compliance with international standards.
6.Customizable Models: Meets various specific applications and needs.

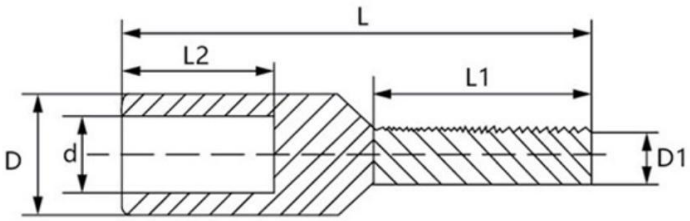

Item No.	L	L1	L2	D1	D	d
DTA-10	39	20	16	5	7.4	5.1
DTA-16	39	20	16	6	8.3	6.2
DTA-25	42	20	16	6	9.1	7.2
DTA-35	44	20	18	6	10.2	8.2
DTA-50	45	20	18	6	12	9.8

Note: Product size data are manually measured, and the specific size is subject to the actual product received.

DTD Copper Inserting Pin Terminal

DESCRIPTION

Application:

1.DTD Electrical Equipment Terminals Non-Insulated Crimp Terminal with Meter Circuit Breaker Copper Tinned Lug and Copper Pin.
2.Copper Material: Durable and corrosion-resistant for reliable connections.
3.Antioxidant Treatment: Protects against oxidation for extended lifespan.
4.Crimp Terminal: Secure wire connections for stable electrical circuits.
5.ISO Certified: Ensures quality and compliance with international standards.
6.Customizable Models: Meets various specific applications and needs.

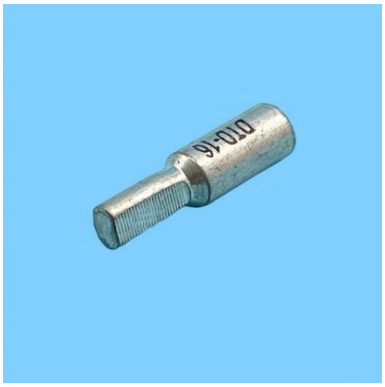

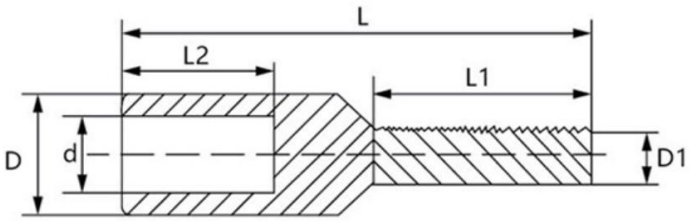

Item No.	L	L1	L2	D1	D	d
DTD-10	33.4	15.3	15.9	3.5	7.3	5.0
DTD-16	34.8	14.6	17.0	4.3	8.5	6.1
DTD-25	35.3	15.0	16.7	4.4	9.8	7.0
DTD-35	33..8	14.0	16.2	4.2	9.8	8.2

Note: Product size data are manually measured, and the specific size is subject to the actual product received.

CCT C-Type Copper Connector

DESCRIPTION

Application:

CCT C-Type Copper Crimp Connector is suitable for the connection of copper splicing.

Feature:

1.Size from 14.5mm-700mm

2.Material: CU, purity 99.9%

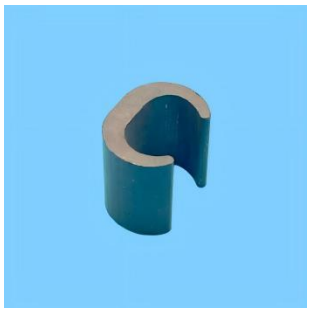

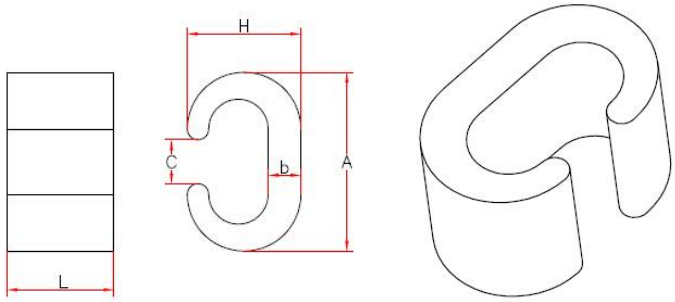

Item No.	Suitable Conductor(mm²)	A	L	b	C
CCT-16	14.5-16	11.8	13	2	7.8
CCT-20	16.5-20	12.8	13	2.9	9.7
CCT-26	21-26	14.7	16	3.2	10.0
CCT-44	27-44	19	20	4	14.4
CCT-60	45-60	21	22	4	15.4
CCT-76	61-76	24.4	22	5	17.6
CCT-98	77-98	27.8	25	5	18.8
CCT-122	99-122	29.8	26	5.5	21.2
CCT-154	123-154	34	28	6	24.4
CCT-190	155-190	37	35	6	25.4
CCT-240	191-240	40	40	7	28.5
CCT-288	141-288	44.5	45	7	34.1
CCT-365	289-365	47.5	50	7	34
CCT-450	366-450	57	60	10	41
CCT-560	451-560	62	65	11	44
CCT-700	561-700	68	70	12	49.5

CMC Multifit Copper Connector

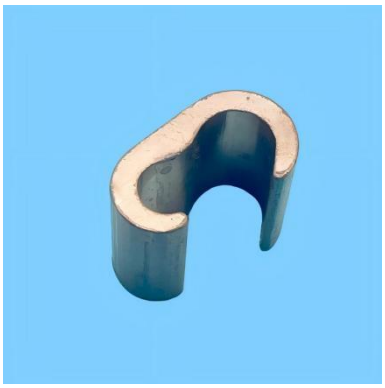

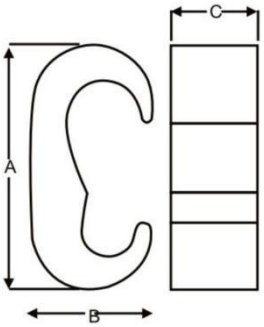

Item No.	Conductor Range(mm²)				Dimensions(mm)		
	Run		Tap		A	B	C
	Min	Max	Min	Max			
CMC35/70	35	70	10	35	36.0	18.3	19.0
CMC70/120	95	120	10	70	50.0	23.2	19.0
CMC70/240	150	240	10	70	62.0	30.9	22.0
CMC120/240	150	240	95	120	68.0	33.9	28.0

CWJC Wide Jaw Copper Connector

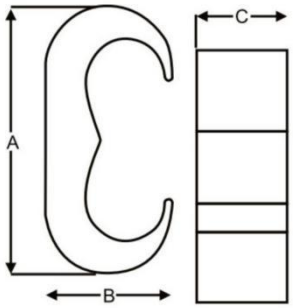

Item No.	Conductor Range(mm²)		Dimensions(mm)		
	Run or Tap				
	Min	Max	A	B	C
CWJC35/35	10	35	30.0	14.0	19.0
CWJC70/70	35	70	39.0	19.0	19.0
CWJC120/120	95	120	52.0	24.0	22.0
CWJC240/240	150	240	74.0	34.4	28.0

AS-H Type Aluminium Cable Crimp Connector

DESCRIPTION

Application:

The AS-H Type Aluminum Connector is suitable for branching identical cross-sections and no need to split the main conductor.

Features:

1. Connector can be gripped in tool and slipped over line for easier and faster installation.
2. Massive aluminum design minimizes corrosion due to galvanic corrosion.
3. Constrains conductors while installer completes crimp.
4. Simplifies installation can reduce installed cost.
5. Permanent inspect ability of installed connectors to insure consistently reliable and dependable connection.

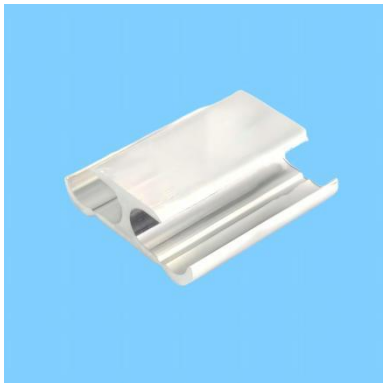

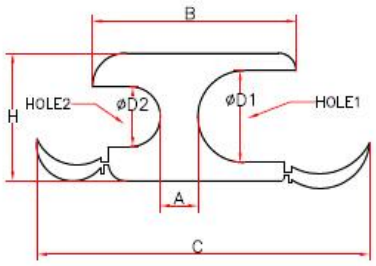

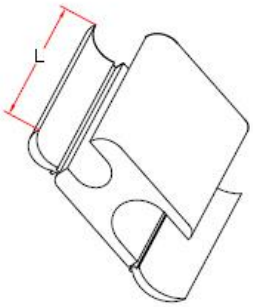

Item No.	Hole1	D1	Hole2	D2	A	B	C	H	L	Weight(g)
AS-H 1	16-35	4.8-8.2	16-35	4.8-8.2	7.1	24.3	41	15	38.3	30
AS-H 2	50-95	8.3-14.6	16-50	4.8-8.6	13	36.6	60	22.5	48.3	72
AS-H 3	50-95	10.0-14.6	50-95	10.0-14.6	5.4	36.4	63	22.3	60.5	73.7
AS-H 4	95-240	13.0-22.4	16-70	4.8-11.4	14.3	50.5	80.4	30	60.5	151.3
AS-H 5	95-240	13.0-22.4	70-120	11.6-16.0	9.4	50.0	83.5	32	60	159.1
AS-H 6	150-240	16.2-22.4	150-240	16.2-22.4	5.1	50.5	90.6	30.3	90	193.3

HTO Type Aluminium Connector

DESCRIPTION

Application:

HTO Type Aluminum Connector is suitable for branching identical cross-sections and no need to split the main conductor.

Features:

1. It was use for wide range conductor .
2. Massive aluminum design minimizes corrosion due to galvanic corrosion.
3. Constrains conductors while installer completes crimp.
4. Conductors are separated by the shape of the connector.
5. Simplifies installation can reduce installed cost.

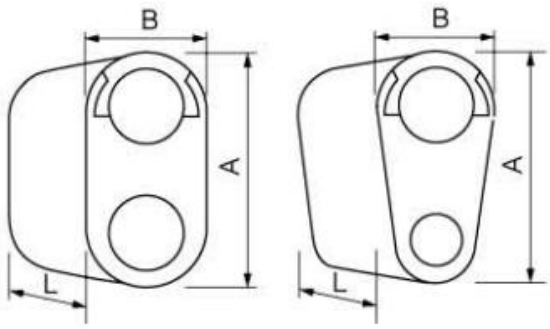

Item No.	Hole1	Hole2	Dimensions		
			A	B	L
HTO-1	50-70	50-70	32.5	17.8	45
HTO-2	50-70	70-150	37	24.7	61
HTO-3	50-70	150-240	47	30	60.6
HTO-4	70-150	70-150	43.5	25	60
HTO-5	70-150	150-240	47	30	60.5
HTO-6	150-240	150-240	50	30	65

T/J Brass Plated Copper Split Bolt

DESCRIPTION

Application:

T/J Copper Bolt Connectors is suitable for the sequence and transportation of all kinds of conductors in electric network.

Advantages:

1.T/J Copper Bolt Connectors available size from 16mm2-240mm2.

2.Hexagonal type head or customed as per drawings or sample.

3.Manufactured from high strength brass.

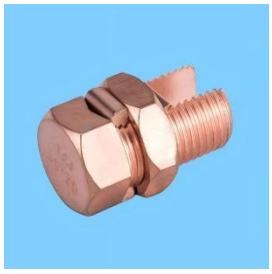

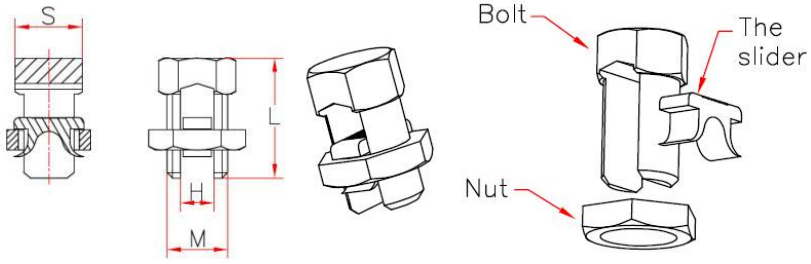

Item No.	L	M	H	S
T/J-16	27	11	5	16
T/J-25	27	14	7	18
T/J-35	35	18	8	22
T/J-50-70	42	20	12	24
T/J-90-120	45	24	14	26
T/J-150-185	60	28	17	30
T/J-200-240	72	30	20	32

WCJC Brass Jointing Clamp

DESCRIPTION

Application:

WCJC Brass Jointing Clamp is fixed by bolts and used in the connections between the electrical equipment with cable and the indoor distribution equipment.

Features：

1.The surface is nickel plated.

2.WCJC Brass Jointing Clamp range is from 16mm² to 500mm².

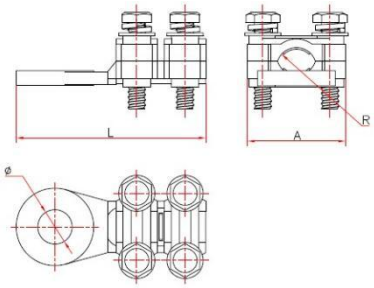

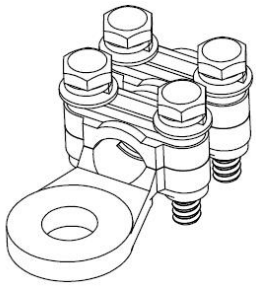

Item No.	Conductor(mm²)	φ	A	L	R
WCJC-1	16-25	7.5	21	37	3
WCJC-2	25-35	10.5	24	48	4
WCJC-3	35-50	10.5	31	48	4.5
WCJC-4	50-70	11.5	31	62	5.5
WCJC-5	70-95	13	33	66	6.5
WCJC-6	95-120	13.5	36.5	74	7.5
WCJC-7	120-150	13.5	36.5	74	8.5
WCJC-8	150-185	17.5	46.5	91	10
WCJC-9	185-240	17.5	46.5	91	10
WCJC-10	300	20.5	56	109	12
WCJC-11	400-500	24	62	121	15

WCJB Copper Jointing Clamp

DESCRIPTION

Application:

WCJB Copper Jointing Clamp is fixed by bolts and used in the connections between the electrical equipment with cable and the indoor distribution equipment.

Advantages：

1.They can be reused many times.

2.Various kinds of size, meet with the customers' requirements.

3.Surface: tin plated

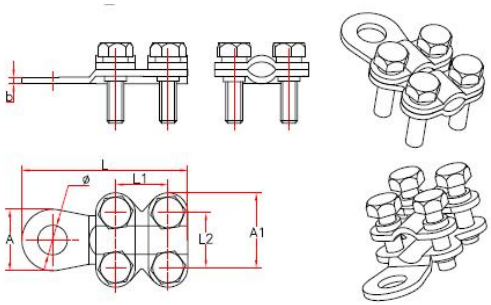

Item No.	Conductor	L	L1	L2	A	A1	b	ф	R
WCJB-1	16-25	39.5	/	13	25	16.5	2.8	8.8	3.5
WCJB-2	25-35	45	13	13	22	18	2.8	8.5	3.5
WCJB-3	35-50	52.5	13.5	13.5	24.5	21	2.9	10.5	4
WCJB-4	50-70	57	16	16	27.5	22	3	10.5	5
WCJB-5	70-95	61	19	19	31	23	3	10.5	5.5
WCJB-6	95-120	69	20	20	35	23.5	3.2	10.5	6.5
WCJB-7	120-150	74	23.5	23.5	42	28.5	3.3	13.5	7.5
WCJB-8	150-185	73.5	25	25	41	27	3.5	13.5	8.5
WCJB-9	185-240	76	25.5	25.5	42	28	3.7	13.5	9
WCJB-10	300-300	80	26	26	44	30	4	13.5	10.5

APG Aluminium Parallel Groove Clamp

DESCRIPTION

Application:

The APG parallel groove clamps are designed to connect two aluminium conductors.

Advantages:

1.Advanced forging technology enhances the mechanical strength of the clamp.

2.Special designed screw hole and arc shape of the body allow clamp to adjusts to different cable size on each side.

3.Clamp body is made of aluminium with excellent electrical conductivity.

4.Gross-grooved clamp channels enhance both mechanical pullout strength and electrical conductivity.

5.Materials of bolt and nut are optional depend on customer request. Options including Hot-dip galvanized steel and Stainless steel

6.Pressure pad is applied to achieve uniform pressure along the clamp.

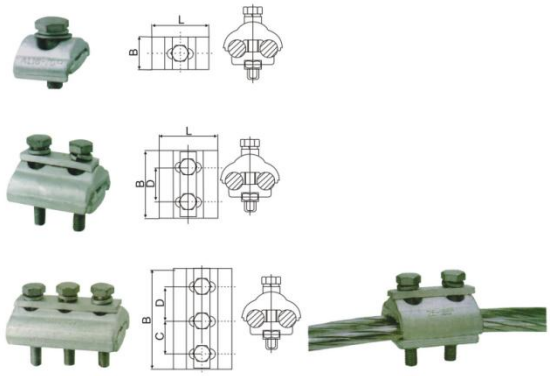

Item No.	Size(mm²)	Bolt
APG-A1	AL16-70	Single bolt
APG-A2	AL16-150	Single bolt
APG-B1	AL6-35	Double bolts
APG-B2	AL16-70	Double bolts
APG-B3	AL16-150	Double bolts
APG-B4	AL25-240	Double bolts
APG-C1	AL16-70	Tri-bolts
APG-C2	AL16-150	Tri-bolts
APG-C3	AL25-240	Tri-bolts
APG-C4	AL35-300	Tri-bolts

CAPG Copper And Aluminium Parallel Groove Clamp

DESCRIPTION

Application:

The CAPG parallel groove clamps are designed to connect aluminium conductors and copper conductors.

Advantages:

1.Advanced forging technology enhances the mechanical strength of the clamp.

2.Special designed screw hole and arc shape of the body allow clamp to adjusts to different cable size on each side.

3.Materials of bolt and nut are optional depend on customer request. Options including Hot-dip galvanized steel and stainless steel.

4.Pressure pad is applied to achieve uniform pressure along the clamp.

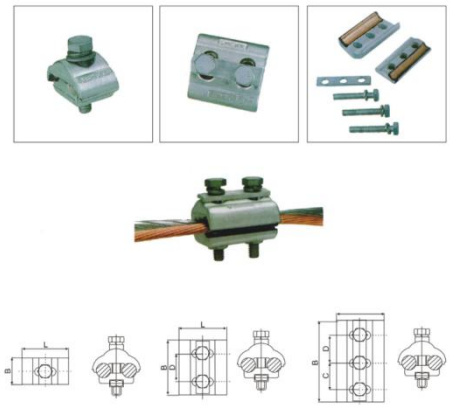

Item No.	Size(mm²)	Bolt
CAPG-A1	Cu 6-50 Al16-70	Single bolt
CAPG-A2	Cu 10-95 Al25-150	Single bolt
CAPG-B1	Cu6-50 Al16-70	Double bolts
CAPG-B2	Cu10-95 Al25-150	Double bolts
CAPG-B3	Cu25-185 Al35-240	Double bolts
CAPG-B4	Cu35-240 Al35-300	Double bolts
CAPG-C1	Cu6-50 Al16-70	Tri-bolts
CAPG-C2	Cu10-95 Al25-150	Tri-bolts
CAPG-C3	Cu25-185 Al35-240	Tri-bolts
CAPG-C4	Cu35-240 Al35-300	Tri-bolts

CUPG Copper Parallel Groove Clamp

DESCRIPTION

Application:

Used for T-connections and joint-connections between copper conductors in medium voltage.

Material:Body=Cu, Bolt=Hot-dip galvanized steel or stainless steel.

Feature:

Special designed screw hole and arc shape of body allow clamp to hold different cable sizes on each side.

Indented groove enhances tensile strength and electrical conductivity.

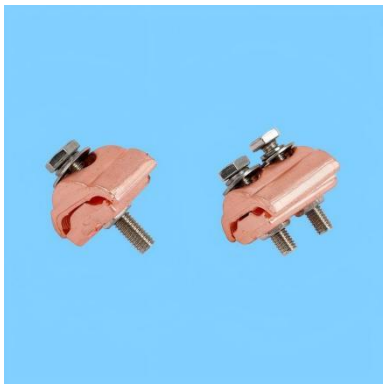

Type	Conductor Cross-section(mm²)	Bolt
CUPG-A1	CU16-70	1*M8*40
CUPG-A2	CU25-150	1*M8*45
CUPG-B1	CU6-35	2*M6*35
CUPG-B2	CU16-70	2*M8*45
CUPG-B3	CU25-150	2*M8*50
CUPG-B4	CU25-240	2*M10*60
CUPG-B5	CU35-300	2*M10*70
CUPG-C1	CU16-70	3*M8*45
CUPG-C2	CU25-150	3*M8*50
CUPG-C3	CU25-240	3*M10*60
CUPG-C4	CU35-300	3*M10*70

BTL Copper And Aluminum Parallel Groove Clamp

Item No.	Al Side mm²	Cu Side mm²	Bolt No.
BTL-1A	10-50	1.5-10	1*M8
BTL-2A	16-95	2.5-25	2*M8
BTL-3A	16-120	6-35	3*M8

ATL Aluminum Parallel Groove Clamp

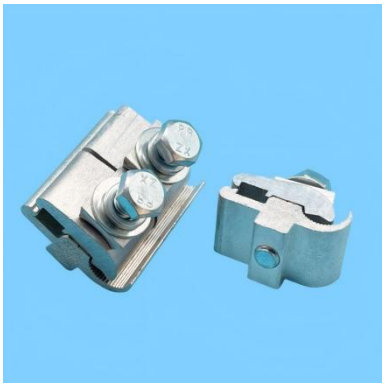

Item No.	Al Side mm²	AL Side mm²	Bolt No.
ATL-1A	10-50	16-70	1*M8
ATL-2A	16-95	16-70	2*M8
ATL-3A	16-120	35-120	3*M8

BMC Bimetallic Connector(CU/AL)

DESCRIPTION

Application:

Used for joining aluminum to copper.

Feature:

Particularly useful where an aluminum lightning protection system needs to be earthed using copper.

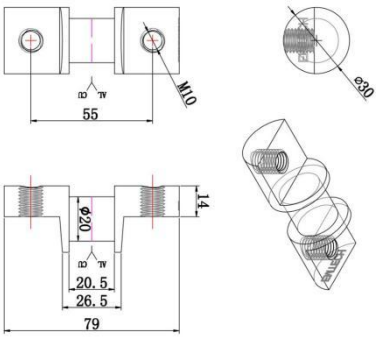

Item No.	Length mm	Width mm	Thickness mm
BMC26	80±1	26	14±1
BMC29	80±1	29	14±1

WCJE Brass Parallel Groove Clamp

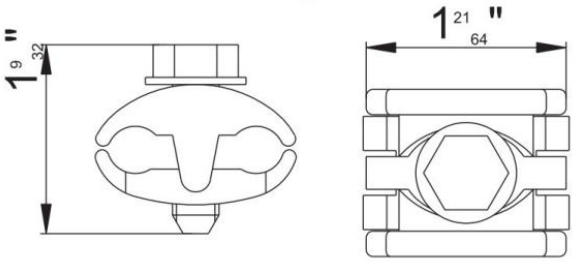

Item No.	Conductor Size of Both Sides(mm²)	Bolts
WCJE-1	10-50	2
WCJE-2	16-95	2
WCJE-3	35-150	2