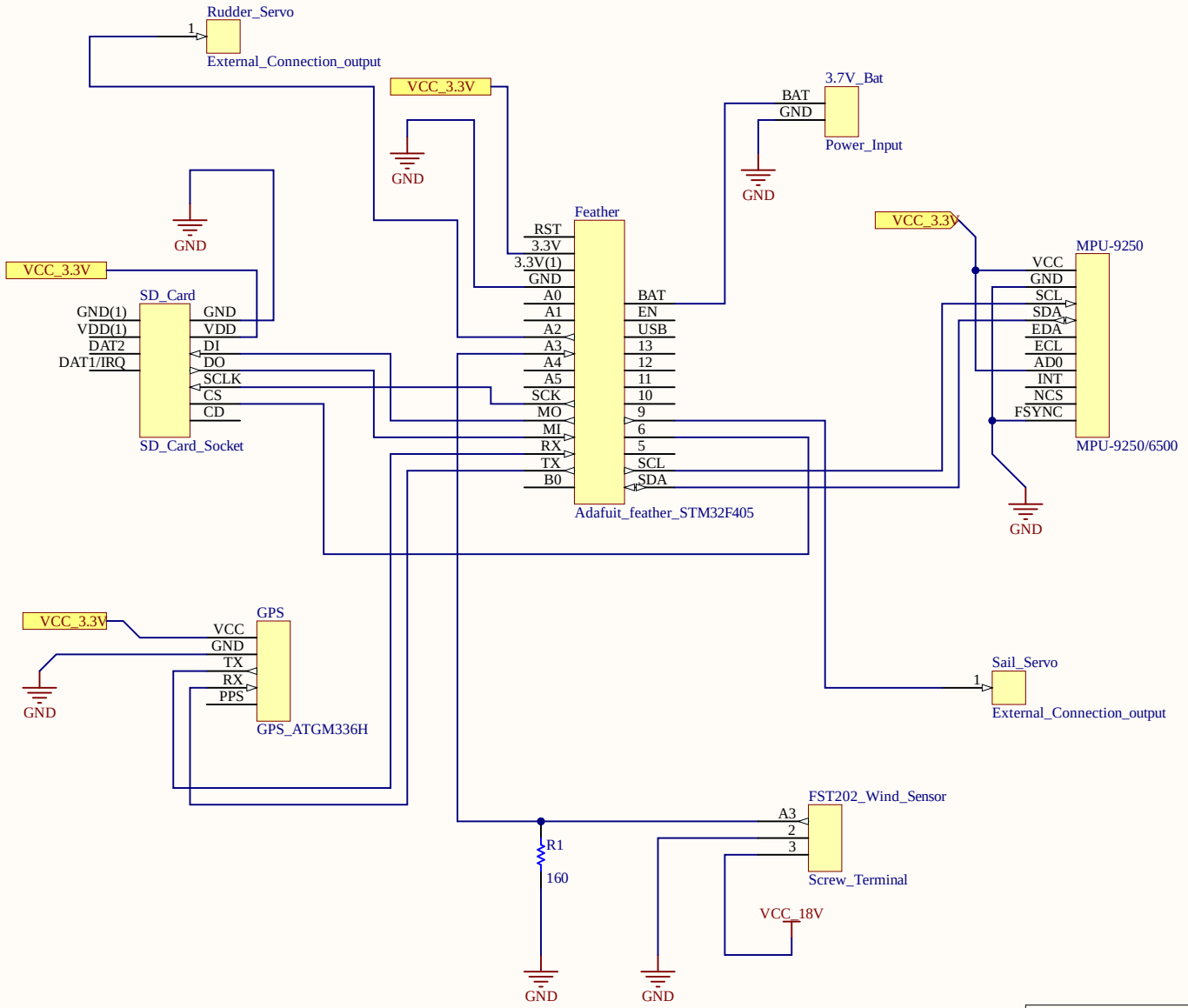

Title		
Skripsie (autonomous sailing vessel)		
Size A4	Number	Revision
Date: 9/22/2021		Sheet of
File: C:\Users\..\Sheet1.SchDoc		Drawn By: Brandon Scott