applied sciences

MDPI

Article

Risk Assessment of Compound Dynamic Disaster Based on AHP-EWM

Runjie Zhang [1,2], Da Tian [1], Hongwei Wang [1], Xinyue Kang [1], Gang Wang [1,2] and Lianman Xu [1,2,*]

[1] School of Environment, Liaoning University, Shenyang 110036, China; runjie326@163.com (R.Z.); 17601426446@163.com (D.T.); wanghw510@163.com (H.W.); kangxinyue97@163.com (X.K.); wg_0404@163.com (G.W.)
[2] Institute of Geohazard Mechanics, Liaoning University, Shenyang 110136, China
* Correspondence: xulianman@lnu.edu.cn; Tel.: +86-13904182782

Abstract: The coal mine in deep mining can easily form a compound dynamic disaster with the characteristics of rock burst and gas outburst. In this paper, the analytic hierarchy process (AHP) and the entropy weight method (EWM) are combined, and the fuzzy comprehensive evaluation (FCE) secondary evaluation model of compound dynamic disaster is proposed to evaluate the risk of compound dynamic disaster, which avoids the problems of the imperfect evaluation index system and strong subjectivity of index weight. Based on the statistical analysis of typical compound dynamic disaster cases in China, three first-level indicators were established, and sixteen second-level indicators were developed. The verification results show that the accuracy and weight are better than the traditional evaluation methods. Combined with geological and mining data, the compound dynamic disaster risk assessment was carried out on the second mining area of mine B, in the Pingdingshan mining area, and the result was grade II (weak risk). Corresponding prevention measures and parameters were implemented, and no compound dynamic disaster occurred during the working face excavation.

Keywords: rock burst; coal and gas outburst; compound dynamic disaster; analytic hierarchy process; entropy weight method; risk assessment

check for updates

Citation: Zhang, R.; Tian, D.; Wang, H.; Kang, X.; Wang, G.; Xu, L. Risk Assessment of Compound Dynamic Disaster Based on AHP-EWM. *Appl. Sci.* **2023**, *13*, 10137. https://doi.org/10.3390/app131810137

Academic Editor: Arcady Dyskin

Received: 20 July 2023
Revised: 26 August 2023
Accepted: 5 September 2023
Published: 8 September 2023

Copyright: © 2023 by the authors. Licensee MDPI, Basel, Switzerland. This article is an open access article distributed under the terms and conditions of the Creative Commons Attribution (CC BY) license (https://creativecommons.org/licenses/by/4.0/).

1. Introduction

The compound dynamic disaster of rock burst and coal and gas outburst (hereinafter referred to as the compound dynamic disaster) refers to a dynamic disaster that appears in the deep mining of coal mines and has some characteristics of rock burst and coal and gas outburst [1–4]. After the coal mine enters deep mining, the overburden gravity stress and structural stress gradually increase, the stress of the surrounding rock of the stope increases significantly, the gas pressure increases and the coal permeability decreases. The main control factors of the rock burst and coal and gas outburst disasters interact and induce each other, and the disaster process promotes itself, forming a compound dynamic disaster with the characteristics of both rock burst and coal and gas outburst [5–7]. A risk assessment of compound dynamic disasters forms the basis for the prediction and prevention of compound dynamic disasters and is an integral part of the system for preventing and controlling such disasters.

Compound dynamic disaster risk assessment is a technical work that comprehensively analyzes geological factors such as coal and rock mass stress, mechanical characteristics of coal and rock mass, geological structure of working face, coal seam characteristics, coal seam gas content and mining technology factors. By dividing the potential hazardous environment into different risk levels, it provides an objective assessment of the potential hazard environment. The detailed rules for prevention and control of rock burst in coal mines stipulates that "the comprehensive index method or other effective methods proven by practice can be used for impact risk assessment". According to the comprehensive index

method, a large number of statistical data on rock burst disasters are used to: examine the influence of various geological factors and mining technical factors on rock burst; determine the influence weight of various factors, obtain the comprehensive index of rock burst risk; and divide the rock burst risk level of the mining area. Practice has proven the simplicity and effectiveness of this method [8]. Scholars have optimized the comprehensive index method and introduced the attribute recognition analysis method based on entropy weight [9], the least-squares method and the time-varying weight method [10]; and have integrated the rock burst early warning model based on the fuzzy comprehensive evaluation method [11], the fuzzy comprehensive evaluation method of AHP [12], the fuzzy comprehensive evaluation method [13] and the back propagation neural network [14]. The above methods have improved the scientific rationality and reliability of the evaluation results of the comprehensive evaluation method to a certain extent. Some scholars use other methods to predict the risk of rock burst, including probabilistic estimates of short-term rock burst risk using ensemble classifiers [15] and the evaluation of the rock burst potential in longwall coal mining using passive seismic velocity tomography and image subtraction technique [16]. Identifying and evaluating coal seam outburst risks is the first step toward preventing and controlling coal and gas outburst disasters. The detailed rules for prevention and control of coal and gas outburst stipulate that "the coal seams assessed as having outburst risk shall be divided into outburst risk areas and non-outburst risk areas", and the gas geological analysis method is usually used to divide the outburst risk areas [17]. Some scholars have proposed the multifactor pattern recognition method [18], fuzzy evaluation method [19,20], extension theory [21], Boruta–Apriori [22] and the back propagation neural network optimized by genetic algorithm and simulated annealing algorithm [23] to carry out coal and gas outburst risk evaluation. To date, a large number of studies have been conducted in order to determine the risk of rock burst and coal and gas outbursts, but there are few studies concerning the risk of compound dynamic disasters in coal mines. Yin Yongming et al. [24] analyzed the mechanical mechanism of impact briquette and gas outburst and used the fuzzy comprehensive method to evaluate the risk. Ouyang Zhenhua [25] studied the impact of gas on coal seam impact risk and proposed an improved comprehensive index evaluation method for coal seam impact risk with gas. Although the above-mentioned dynamic disaster evaluation method considers the impact factors of two disasters, i.e., rock burst and coal and gas outburst, it essentially regards the dynamic disaster as a single disaster. There is a lack of comprehensive evaluation indicators for compound dynamic disasters, the system of evaluation indicators is incomplete, and the weights of the indicators are fuzzy and uncertain, as well as being subjective; thus, making it difficult to determine an index weight that is reasonable. The risk assessment method of compound disasters needs to be improved.

In addition, the fuzzy multi-attribute decision-making method for risk analysis has been applied in other fields, such as risk assessment of public institutions [26], risk assessment of open subway construction [27], selection of coal mining subsidence area management model [28], risk assessment of flood disaster in Beijing [29] and risk assessment of coal seam water inrush [30].

Therefore, this paper examines the main causes of compound dynamic disasters in China through an integrated approach. A compound dynamic disaster risk grade evaluation model is developed using the fuzzy comprehensive evaluation method (FCE) and is based on the combination of the analytical hierarchy processes (AHPs) and entropy weight methods (EWMs). In addition, it proposes a compound dynamic disaster grade classification index, forming the AHP-EWM compound dynamic disaster risk evaluation method for predicting and preventing compound dynamic disasters.

2. Analysis of Main Control Factors of Compound Dynamic Disaster

A large number of field studies and theoretical studies show that the control factors of rock burst and coal and gas outburst include fault slip, hard roof fracture, change of coal seam thickness, stress concentration caused by folds, high gas pressure and mining

disturbance [7,31–37]. According to the dialectical relationship between internal and external factors that induce complex dynamic disasters, they can be divided into geological influencing factors, coal body property factors and mining technology influencing factors.

2.1. Geological Factors

With the increase in mining depth, the self-weight stress and the accumulated elastic energy in the coal and rock mass increases. According to domestic and foreign research and statistics, when the depth is $h \leq 350$ m, the compound dynamic disaster will not occur. When the depth is $350 < h \leq 500$ m, the risk will gradually increase to a certain extent. From 500 m onwards, with the increase in mining depth, the risk of compound dynamic disaster will increase sharply. When the mining depth is 800 m, the risk of compound dynamic disaster will increase 14 times compared with that at 500 m [38].

Stress concentration is easy to form near the fault. Research shows that, when the mining of the working face is close to the fault, it will affect the distribution range, distribution form and stress peak value of the advanced roof pressure of the working face, the fracture tendency is different from the advancing direction of the working face and the influence on the roof pressure is different [39]. When the working face moves from the footwall of the fault to the fault, the coal pillar between the working face and the fault will be pressurized, resulting in high stress concentration, generating strain and thus accumulating a large amount of elastic energy. As the working face advances, the accumulated energy will continue to increase, and the risk of compound dynamic disasters of rock burst and coal and gas outburst will be greater.

The suspended roof of the goaf is formed for mines with thick and hard roofs, as the roof is hard and does not easily fall. With the advance of the working face, the area of the suspended roof in the goaf increases, the roof will bend and sink under the action of its own weight and the load of the overlying rock strata, and a certain tensile stress will be generated in the center of the suspended roof in the goaf. Once a part reaches tensile strength, the roof will instantly form a macro crack and the tensile stress will transfer rapidly, forming an avalanche chain reaction causing the roof to suddenly break. In addition, when the roof rock layer is hard, complete, dense and impermeable, the gas in the coal seam is not easy to escape and continues to accumulate, resulting in high gas pressure, high content and high outburst risk. Therefore, when the roof is dense and the roof thickness is large, the possibility of rock burst and gas outburst is very high.

The change of coal seam thickness is often more important than the thickness itself to form a compound dynamic disaster. At the place where the thickness suddenly becomes thinner or thicker, the stress concentration phenomenon is easy to occur in the coal body due to static load [40]. When the mining face is close to these areas, it is easy to create stress superposition, which may lead to the occurrence of compound dynamic disasters.

The fold structure is formed by the bending deformation of coal bed due to the compression and torsion of vertical and horizontal stress. It is the most basic tectonic type in the process of crustal movement. In coal mining, there is a large tectonic stress in the fold area. Xie et al. [41] studied tectonic coal and in situ stress, and identified that in situ stress of fold structures is the main controlling factor of coal and gas outburst. Under the influence of mining disturbance in the working face, it is very easy to induce coal and rock dynamic disaster accidents.

2.2. Coal Property Factors

The compound dynamic disaster is generated under the condition that rock burst and coal and gas outburst are interlaced and mutually promoted. Therefore, the mechanical properties of coal, such as elastic energy index, impact energy index, dynamic failure time and solidity coefficient, as well as gas parameters such as residual gas content, residual gas pressure and initial gas release velocity [25,38], are necessary conditions for determining the occurrence of compound dynamic disaster [42].

2.3. Mining Technology Factors

Protective layer mining refers to the mining of a coal seam first, which can unload the rock stress or gas pressure of adjacent coal seams for a certain time. A protective mining layer is an effective and fundamental regional preventive measure to prevent dynamic disaster [43]. The evaluation of the pressure relief effect of the protective layer is based on the combination of the mining time of the protective layer and the actual situation, and is determined according to previous experience and expert opinions.

According to the layout and location relationship between the goaf and the mining face, the influence of the goaf can be divided into a solid coal working face, one side of the goaf, two sides of the goaf and island type working face. The larger the area of the goaf along the coal seam incline, the greater its sectional inertia moment in the roof surface of the goaf, the greater its tensile stress along the coal seam incline direction and the greater its bending deformation. When the tensile stress of the roof reaches its failure state, the roof of the goaf will collapse, causing instability of the goaf.

The mining speed is controlled by the mining method. If the mining speed is too fast, the disturbance to the coal strata will increase, resulting in a small scope of action of the bearing pressure-boosting section, a high peak value and a close distance to the coal wall. The possibility of forming stress concentration will increase, increasing the risk of dynamic disaster [44]. As a consequence, the risk of dynamic disasters will increase due to the possibility of stress concentration.

According to the case analysis and statistical results, the smaller the working face length is, the greater the initial fracture step distance of the roof will be. When the length of the working face increases more than 200 m, the risk of the impact on the compound disaster is lower. The width of the working face is gradually increasing, and the maximum length of the working face has reached more than 300 m. However, due to the limitation of mining technical conditions, some working faces are only tens of meters, with a large difference. The length of the working face is one of the important factors that affect compound dynamic disasters.

3. Establishment of Evaluation Model

3.1. Determination of Weight

FCE was proposed by Wang Peizhuang, a Chinese scholar. It is a comprehensive evaluation method based on the membership theory of fuzzy mathematics, which can describe complex systems in line with reality and is widely used in automatic control, economic management, bioengineering, environmental science, psychology, philosophy and many other fields [45–47].

The traditional FCE evaluation of the risk of compound dynamic disasters, due to the strong subjectivity of the weights, leads to the deviation of the rating results. Therefore, subjective and objective methods are used. First, the AHP is used to determine the subjective weight of the compound dynamic disaster risk assessment indicators, and then the EWM is used to determine the objective weight. Finally, the subjective and objective weights are reconstructed to obtain the comprehensive weight of the FCE, which can make the evaluation results accurate.

3.1.1. Determination of Subjective Weight

The AHP, which was founded by T.L. Saaty, is a method of combining qualitative analysis and quantitative analysis to analyze decision objects under the influence of multiple factors. The AHP is used to determine the main control factors of compound dynamic disaster and divide the hierarchical structure [48,49], and then the judgment matrix is constructed based on the subjective weighting of experts on the analysis of mine geology and mining data, and the statistical analysis of on-site dynamic events. The specific process is shown in Figure 1. The AHP has been successfully applied to maintain policy selection [50–53]. The analytic hierarchy process is also used for risk assessment.

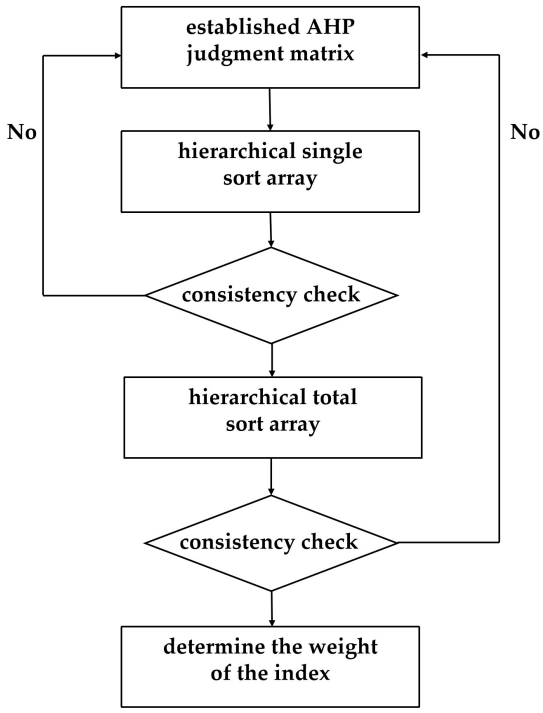

Figure 1. Flow chart of AHP.

The "satyy1-9 scale" is used to express the importance of factors at all levels. According to the relative importance, the judgment matrix of mutual comparison can be obtained when $C = (C_{ij})_{n\times n}$ where C_{ij} is the scale of the ith index and the jth index, $i = 1, 2, 3, \ldots, n$, $j = 1, 2, 3, \ldots, n$. Then, normalize each column element in the judgment matrix C, see formula (1) for details. After normalization, the judgment matrix is added by rows, and the eigenvector can be obtained by summing and multiplying each row of matrix by 1/n. Furthermore, the eigenvector $W_1 = (w_1, w_2, \ldots, w_n)$ is finally obtained using Formulas (2) and (3), The maximum characteristic root λ_{max} of matrix C is obtained with the calculation using Formula (4).

$$O_i = \frac{c_{ij}}{\sum_{i=1}^{n} o_{ij}} \tag{1}$$

$$w_{0i} = \sum_{j=1}^{n} c_{ij} \tag{2}$$

$$w_i = \frac{w_{0i}}{n} \tag{3}$$

$$\lambda_{max} = \sum_{i=1}^{n} \frac{(Bw_i)}{nw_i} \tag{4}$$

In order to ensure the rationality of the weight distribution obtained by using the AHP method, avoid the situations that do not conform to the actual requirements and are self-contradictory. The importance of each element is checked for coordination. Therefore, the consistency index of the judgment matrix is calculated with Formulas (5) and (6). If the value of the result is larger, the consistency is worse.

$$CR = \frac{CI}{RI} \tag{5}$$

$$CI = \frac{\lambda_{max}}{n-1} \tag{6}$$

In the formula, CI represents the consistency inspection index; n represents the matrix order established; CR stands for consistency ratio; RI stands for mean randomness index. The specific criterion is that when $CR < 0.1$, the consistency test is passed, and the subjective weight set $Z = \{z_1, z_2, \ldots, z_m\}$ is obtained. If the consistency conditions are not met and the representative matrix is wrong, the judgment matrix shall be modified until the consistency test is met. The RI data is closely related to the order of the matrix established, and the specific values of the average random consistency index are shown in Table 1.

Table 1. Mean stochastic consistency index value.

n	1	2	3	4	5	6	7	8	9	10
RI	0	0	0.52	0.89	1.12	1.36	1.41	1.46	1.49	1.52

3.1.2. Determination of Objective Weight

The EWM is an objective weighting method. According to the information theory, if the entropy value of a compound dynamic disaster evaluation index is smaller, the weight of the index in the compound dynamic disaster evaluation process will be greater, and its impact on the compound dynamic disaster will be greater. The specific process is shown in Figure 2. The EWM is widely used in various fields [54–56].

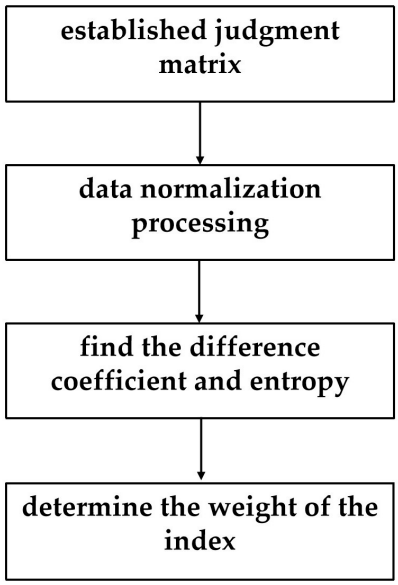

Figure 2. Flow chart of EWM.

The extreme value method is used to normalize the geological, mining and other basic data of the working face. The higher the value is, the lower the risk of evaluation, which is a positive indicator. Formula (7) is used for normalization. The lower the value is, the lower the risk of evaluation, which is a negative indicator. Formula (8) is used for normalization. The matrix $E = (e_{ij})_{n \times m}$ is obtained. m_{ij} is the minimum value in x_{ij}, M_{ij} is the maximum value in x_{ij}, $i = 1, 2, 3, \ldots, n$, $j = 1, 2, 3, \ldots, m$. The matrix E is calculated by using Formulas (9) and (10), and the entropy value h_j and difference coefficient k_j of the index are obtained. The objective weight v_j and index weight set V are obtained by using Formula (11).

$$e_{ij} = \frac{x_{ij} - m_{ij}}{M_{ij} - m_{ij}} \tag{7}$$

$$e_{ij} = \frac{M_{ij} - x_{ij}}{M_{ij} - m_{ij}} \tag{8}$$

$$h_j = -\frac{1}{lnn}\sum_{i=1}^{n} e_{ij} \times lne_{ij},\ 0 \le h_j \le 1 \tag{9}$$

$$k_j = 1 - h_j (j = 1, 2, 3, \ldots, m) \tag{10}$$

$$v_j = \frac{k_j}{\sum_{i=1}^{m} k_j}, V = [v_1, v_2, v_3, \ldots v_m] \tag{11}$$

3.1.3. Comprehensive Weight Reconstruction

In order to avoid the subjectivity of the AHP and the separation of the EWM from reality, the weight set $Q = \{q_1, q_2, \ldots q_m\}$ of the fuzzy matrix is established by using the arithmetic mean value for the weight set Z and V to reconstruct the subjective and objective weights. The discreteness of the reconstructed weights is also expanded, and the final comprehensive evaluation results tend to be more reasonable and scientific.

3.2. Determine the Hazard Level of Compound Dynamic Disasters

The hazard level of compound power disaster is divided into four levels, from low to high, namely, I, II, III and IV, corresponding to no hazard, weak hazard, medium hazard and strong hazard. Its comment set $Y = \{Y_1, Y_2, Y_3, Y_4\}$ where Y_1 is non dangerous; Y_2 is weak risk; Y_3 is medium risk; and Y_4 is a strong risk.

As a result of the fact that all assessment indicators are real numbers and their membership within a certain range is essentially linear, the trapezoidal distribution function is used for the FCE assessment method when assessing the risk of compound dynamic disasters, as shown in Figure 3, and its function expression is shown in Formula (12) where a, b, c and d are parameters, and $a < b < c < d$.

$$A(x) = \begin{cases} 0 & x \le a \\ \frac{x-a}{b-a} & a < x \le b \\ 1 & b < x \le c \\ \frac{d-x}{d-c} & c < x \le d \\ 0 & x > d \end{cases} \tag{12}$$

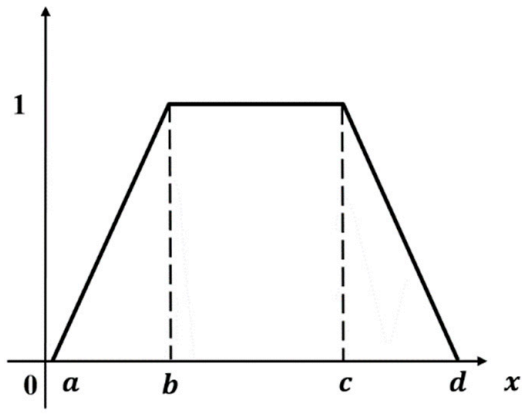

Figure 3. Trapezoidal distribution function.

4. Risk Classification of Evaluation Indicators

4.1. Geological Factors

According to the above analysis, with the increase in mining depth, the risk of compound dynamic disasters increases rapidly. Therefore, the membership parameter of mining depth (U_{11}) is set as 0, 350, 500 and 800 (m).

The calculation formula of fault scale index is shown in Formula (13) [57] where T is the fault scale index; H_i is the drop of the ith fault; L_i is the strike length of the ith fault; n is the number of faults within the assessment range; and S is the area of the evaluation scope. Therefore, the membership parameter of U_{12} is set as 0, 0.3, 0.6 and 0.9.

$$T = \frac{\sum_{i=1}^{n} H_i \times L_i}{S} \tag{13}$$

The characteristic parameter of roof rock stratum thickness is used to characterize the roof characteristics (Formula (14)) where h_i is the thickness of the ith rock stratum within 100 m of the roof and r_i is the weak surface decline coefficient of the given rock stratum. Therefore, the membership parameter of U_{13} is set as 0, 50, 70 and 90 (m).

$$L_{st} = \sum h_i r_i \tag{14}$$

The change of coal seam thickness is a qualitative index [58]. Now, the qualitative index is classified into four levels according to the literature [59–62]. The four levels correspond to no-change degree, small-change degree, medium-change degree and large-change degree. Therefore, the membership parameter of U_{14} is set as 0, 1, 2 and 3. See Table 2 for details.

Table 2. Qualitative index grading and quantification table.

Quantification of Membership Parameters	0	1	2	3
Change of coal seam thickness U_{14}	No change	Small change	Medium change	Large change
Coefficient of the protective layer U_{31}	Less than 1 year	1~2 years	2~3 years	More than 3 years
Influence of goaf U_{32}	solid coal	one side goaf	two sides goaf	island type face

The plane deformation coefficient was first proposed by former Soviet Union scholars when they studied the geological conditions of coal seam outburst, which is an index reflecting the complexity of fold structure [63]. See Formula (15) for its details, where K_{TC} is the plane deformation coefficient; h is the elevation difference of adjacent contour lines, m; ω is the transformation angle of the contour near the center of the unit, °; L is the average value of contour line spacing in the calculation unit, m; and S is the area of the calculation unit, m^2. The smaller the plane deformation coefficient is, the smaller the influence of folds on the change of tectonic stress in the assessed area is. According to the statistics of field survey data, the membership parameters of U_{15} are determined as 0, 10^{-5}, 10^{-3} and 10^{-1}.

$$K_{TC} = h \cdot \omega / L \cdot S \tag{15}$$

4.2. Coal Property Factors

Three indicators, elastic energy index, impact energy index and dynamic failure time, are used to characterize the impact propensity of coal seams for compound dynamic disasters. For the classification of membership parameters, refer to *Classification of Coal's Impact propensity and the Determination Method of Index* (GB/T 25217.2-2010), the literature [46] and statistics of field survey data of compound dynamic disasters, which are divided into Class I, II, III and IV. The residual gas content, residual gas pressure, firmness coefficient, and the danger level of the initial speed of gas emission refer to the limit value in the *Detailed Rules for the Prevention and Control of Coal and Gas Outburst* as the threshold value. In combination with the field survey data of compound dynamic disaster, the threshold value less than 1/4 is Level I; the 1/4~1/2 threshold is Level II; and 1/2~3/4 threshold value is Level III. If the threshold value is greater than 3/4, it is Grade IV. As the uniaxial compressive strength test of coal body is greatly affected by the sampling location, processing method and other factors, the results are discrete. A large number of studies show that the relationship between the uniaxial compressive strength of coal body and the solidity coefficient is 10-fold, so the solidity coefficient is selected as the evaluation index.

4.3. Mining Technology Factors

The coefficient of the protective layer is a qualitative index, which is classified and quantified. It is generally believed that the pressure relief effect is good if the mining time of the protective layer is less than 1 year. The pressure relief effect is average if the mining time of the protective layer is 1~2 years. The effect is poor if the mining time of the protective layer is 2~3 years. If the mining time of the protective layer is more than 3 years, the failure of the protective layer is considered as no protective layer. Therefore, the membership parameter of U_{31} is set as 0, 1, 2 and 3, as shown in Table 2.

The influence of the goaf is also a qualitative indicator. According to the layout and location relationship between the goaf and mining face, the influence of the goaf can be divided into solid coal face, one side goaf, two sides goaf and island type face. Therefore, the membership parameter of U_{32} is set as 0, 1, 2 and 3. See Table 2 for details.

The mining speed is controlled by the mining method. If the mining speed is too fast, the disturbance to the coal strata will increase, resulting in a small scope of action, high peak value of the bearing pressure pressurization section (close to the coal wall), increasing the possibility of forming stress concentration and increasing the risk of impact. According to the statistics of field survey data, the membership parameters of U_{33} are set as 0, 2, 3.5 and 4.5 (m/d).

The smaller the working face length is, the greater the initial fracture step distance of the roof will be. A large number of field practices have proved that when the length of the working face increases more than 200 m, the risk of the impact on the compound dynamic disaster is lower. According to the statistics of field survey data, the membership parameter of U_{34} is set as 300, 150, 100 and 0 (m).

See Table 3 for the specific grading of each evaluation index. In combination with the membership function Formula (12), the membership function of each evaluation index is obtained, and the membership evaluation matrix R is calculated, as shown in Formula (17). According to the membership degree evaluation matrix R and the comprehensive weight set Q, the compound dynamic disaster risk evaluation matrix B is obtained. See Formula (16). According to the principle of maximum membership degree, the compound dynamic disaster risk evaluation result is B_{max}.

$$B = Q \times R = \begin{bmatrix} B_I & B_{II} & B_{III} & B_{IV} \end{bmatrix} \tag{16}$$

$$\mathrm{R} = \begin{bmatrix} r_{11} & r_{12} & r_{13} & r_{14} \\ r_{21} & r_{22} & r_{23} & r_{24} \\ \cdots & \cdots & \cdots & \cdots \\ r_{m1} & r_{m2} & r_{m3} & r_{m4} \end{bmatrix} \tag{17}$$

Table 3. Classification of evaluation indicators.

Target Layer	Primary Index	Secondary Index	Evaluation Index Grade Standard			
			I	II	III	IV
Risk degree of compound dynamic disaster U	Geological Factors U_1	Mining depth U_{11}	$h \leq 350$ m	350 m < h ≤ 500 m	500 m < h ≤ 800 m	h > 800 m
		Fault scale index U_{12}	$0 < T \leq 0.3$	$0.3 < T \leq 0.6$	$0.6 < T \leq 0.9$	$T > 0.9$
		Characteristic parameter of roof rock stratum thickness U_{13}	$L_{st} \leq 50$ m	50 m < L_{st} ≤ 70 m	70 m < L_{st} ≤ 90 m	L_{st} > 90 m
		Change of coal seam thickness U_{14}	0	1	2	3
		Plane deformation coefficient U_{15}	$\leq 10^{-5}$	$\leq 10^{-3}$	$\leq 10^{-1}$	$> 10^{-1}$
	Coal property factors U_2	Impact energy index U_{21}	$K_E \leq 1.5$	$1.5 < K_E \leq 3.5$	$3.5 < K_E \leq 5$	$K_E > 5$
		Elastic energy index U_{22}	$W_{ET} \leq 2$	$2 < W_{ET} \leq 3.5$	$3.5 < W_{ET} \leq 5$	$W_{ET} > 5$
		Dynamic failure time U_{23}	$500 \leq DT$	$300 < DT \leq 500$	$50 < DT \leq 300$	$DT < 50$
		Residual gas content U_{24}	$4 \leq K$	$4 < K \leq 6$	$6 < K \leq 8$	$K < 8$
		Residual gas pressure U_{25}	$P \leq 0.19$ MPa	$0.19 < P \leq 0.4$ MPa	$0.4 < P \leq 0.60$ MPa	$P > 0.60$ MPa
		Firmness coefficient U_{26}	$f > 2$	$1 \leq f < 2$	$0.5 \leq f < 1$	$f \leq 0.5$
		Initial speed of gas release U_{27}	$0 < \Delta p \leq 11$	$11 < \Delta p \leq 13$	$13 < \Delta p \leq 30$	$\Delta p > 30$
	Mining technology factors U_3	Coefficient of the protective layer U_{31}	0	1	2	3
		Influence of goaf U_{32}	0	1	2	3
		Mining speed U_{33}	$M \leq 2$ m/d	2 m/d < M ≤ 3.5 m/d	3.5 m/d < M ≤ 4.5 m/d	4.5 m/d < M
		Working face length U_{34}	$L \leq 300$ m	150 m ≤ L < 300 m	100 m ≤ L < 150 m	L < 100 m

5. Risk Evaluation of Compound Dynamic Disaster

5.1. Verification of the Accuracy of Evaluation Methods

The fourth mining area of mine A in the Pingdingshan mining area is selected as the evaluation object to verify the accuracy of the model. The mining depth of this mining area is 880~1039 m, the average thickness of the coal seam is 3.0 m, the geological structure of the mine is complex and the occurrence of the coal seam is unstable. See Table 4 for specific basic data. In the history of this mining area, there were 48 times of compound dynamic disasters, all of which were near the fault. The coal seam thickness changed greatly, and the working face was a goaf working face. The basic data of three working faces with dynamic disasters in this mining area were extracted for model verification.

The compound dynamic disaster risk evaluation matrix is based on the AHP-EWM is $B = Q \times R$ = [0.5475, 0.8459, 0.6668, 0.9399], according to the principle of maximum membership degree. The evaluation result is $B = 0.9399$ and the risk level is IV (strong risk).

The residual gas pressure in the fourth mining area is 0.6~1.5 MPa, and the initial speed of gas is 12.3~13.22 mL/s. According to the limit value provisions in the Detailed Rules for the *Detailed Rules for the Prevention and Control of Coal and Gas Outburst*, the coal seams in the fourth mining area have the risk of coal and gas outburst. According to the requirements of outburst prevention measures in the *Detailed Rules*, drilling pressure relief and other measures were taken to reduce the outburst risk during the mining in this mining area. However, three working faces in the fourth mining area suffered from dynamic disasters.

The comprehensive index method is used to evaluate the rock burst risk in the fourth mining area. The evaluation result is W_t = 0.38, and the mining area is of weak rock burst risk. However, 48 dynamic disasters occurred in this mining area during the mining process, so the evaluation result is low and inconsistent with the site's conditions.

It can be seen that the compound dynamic disaster cannot be evaluated and treated separately as a single dynamic disaster, and the integrated evaluation must be adopted. The compound dynamic risk evaluation method based on the AHP-EWM comprehensively considers geological factors, coal property factors (coal impact tendency and gas conditions) and mining technology factors, and uses subjective and objective weights for comprehensive weighting. The weights determined are scientific and reasonable, and the assessment results are highly consistent with the actual situation.

5.2. Field Application of Evaluation Methods

The assessment object is the second mining area of mine B in the Pingdingshan mining area, where the minimum mining depth exceeds 800 m, with an average of 910 m. The thickness of the coal seam is 0.35–4.46 m, with an average of 1.47 m. There is one layer of dirt band with a thickness of 0.18~0.70 m. The dip angle of the coal seam is 9~11°. The roof is sandstone, and the bottom is argillaceous sandstone. The maximum gas pressure of the coal seam is 1.2 MPa and the maximum gas content is 8.18 m^3/t measured at the 800 m level. See Table 5 for specific data. Since 2000, there were a total of eight compound dynamic disasters in the coal seam where the mining area was located with adjacent coal seams. Geological information of the second mining area is shown in Figure 4.

Table 4. Basic data of each working face in the fourth mining area of mine A in the Pingdingshan mining area.

Target Layer	Primary Index	Secondary Index	Unit	Working Face 1	Working Face 2	Working Face 3
Risk degree of compound dynamic disaster U	Geological Factors U_1	Mining depth U_{11}	m	1039	880	960
		Fault scale index U_{12}	-	0.05	0.05	0.05
		Characteristic parameter of roof rock stratum thickness U_{13}	-	44.2	50.3	41
		Change of coal seam thickness U_{14}	-	3	1	3
		Plane deformation coefficient U_{15}	-	3.28×10^{-5}	6.54×10^{-6}	1.50×10^{-6}
	Coal property factors U_2	Impact energy index U_{21}	-	1.68	2.28	3.57
		Elastic energy index U_{22}	-	3.87	2.97	3.02
		Dynamic failure time U_{23}	ms	346	484	542
		Residual gas content U_{24}	m^3/t	16.2	10.2	13.62
		Residual gas pressure U_{25}	MPa	1.5	0.6	0.72
		Firmness coefficient U_{26}	-	0.29	0.4	0.3
		Initial speed of gas release U_{27}	mL/s	13.22	12.3	13.1
	Mining technology factors U_3	Coefficient of the protective layer U_{31}	-	3	2	3
		Influence of goaf U_{32}	-	1	1	1
		Mining speed U_{33}	m/d	4	3.5	4.2
		Working face length U_{34}	m	265	248	256

Table 5. Basic data of each working face in the second mining area of mine B in the Pingdingshan mining area.

Target Layer	Primary Index	Secondary Index	Unit	32,020 Working Face	32,040 Working Face	32,010 Working Face
Risk degree of compound dynamic disaster U	Geological factors U_1	Mining depth U_{11}	m	937	968	944
		Fault scale index U_{12}	-	0.02	0.01	0.01
		Characteristic parameter of roof rock stratum thickness U_{13}	-	53.2	51.9	37.1
		Change of coal seam thickness U_{14}	-	1	1	1
		Plane deformation coefficient U_{15}	-	4.78×10^{-6}	5.60×10^{-6}	6.40×10^{-6}

Table 5. *Cont.*

Target Layer	Primary Index	Secondary Index	Unit	32,020 Working Face	32,040 Working Face	32,010 Working Face
Risk degree of compound dynamic disaster U	Coal property factors U_2	Impact energy index U_{21}	-	3.77	2.89	2.59
		Elastic energy index U_{22}	-	2.53	3.51	2.77
		Dynamic failure time U_{23}	ms	614	521	321
		Residual gas content U_{24}	m^3/t	3.5	4.05	4.65
		Residual gas pressure U_{25}	MPa	0.38	0.52	0.45
		Firmness coefficient U_{26}	-	0.36	0.5	0.61
		Initial speed of gas release U_{27}	mL/s	12	14	15
	Mining technology factors U_3	Coefficient of the protective layer U_{31}	-	3	3	0
		Influence of goaf U_{32}	-	1	1	0
		Mining speed U_{33}	m/d	4	3.2	2.7
		Working face length U_{34}	m	204.1	156	249.3

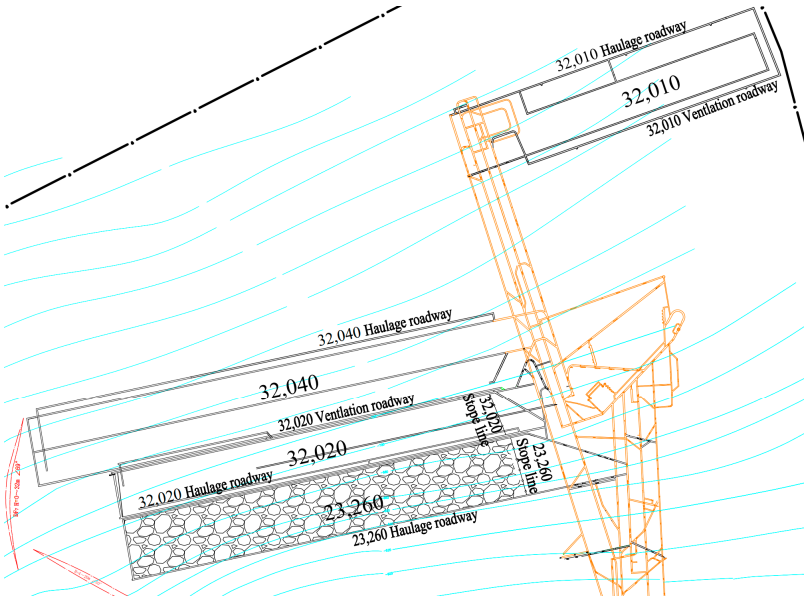

Figure 4. Geological information of the second mining area.

5.2.1. Calculation of Weight

The basic data of the three preparatory working faces (32,010, 32,040 and 32,020 working faces) in the second mining area are shown in Table 5. The subjective weight is calculated using the AHP according to the flow in Figure 1, and all of them pass the consistency test. The objective weight is calculated using the EWM according to the flow in Figure 2. Use the arithmetic mean to reconstruct the subjective and objective weights. See Table 6 for the results and then obtain the weight set Q = {0.2337, 0.3131, 0.1412, 0.2117, 0.1003, 0.1196, 0.1412, 0.1305, 0.1653, 0.2006, 0.1076, 0.1353, 0.1857, 0.2735, 0.3379, 0.2030}.

5.2.2. Calculation of Membership Matrix

According to the trapezoidal membership function Formula (12) and the classification of evaluation indicators in Table 3, the membership of the secondary index of the compound dynamic disasters risk in the second mining area is obtained. The membership matrix R is shown as follows.

$$R = \begin{bmatrix} 0.000 & 0.000 & 0.000 & 1.000 \\ 0.956 & 0.044 & 0.000 & 0.000 \\ 0.052 & 0.948 & 0.000 & 0.000 \\ 0.000 & 1.000 & 0.000 & 0.000 \\ 1.000 & 0.000 & 0.000 & 0.000 \\ 0.000 & 0.208 & 0.792 & 0.000 \\ 0.000 & 0.376 & 0.624 & 0.000 \\ 0.073 & 0.927 & 0.000 & 0.000 \\ 0.000 & 0.967 & 0.033 & 0.000 \\ 0.000 & 0.000 & 0.750 & 0.250 \\ 1.000 & 0.000 & 0.000 & 0.000 \\ 0.000 & 0.000 & 0.961 & 0.039 \\ 0.000 & 0.000 & 1.000 & 0.000 \\ 0.333 & 0.667 & 0.000 & 0.000 \\ 0.000 & 0.133 & 0.867 & 0.000 \\ 0.031 & 0.969 & 0.000 & 0.000 \end{bmatrix}$$

Table 6. Weight distribution.

Target Layer	Primary Index	Weight of Primary Index			Secondary Index	Weight of Secondary Index		
		Subjective	Objective	Reconfiguration		Subjective	Objective	Reconfiguration
Risk degree of compound dynamic disaster U	Geological factors U_1	0.2973	0.5491	0.4257	Mining depth U_{11}	0.2988	0.1686	0.2337
					Fault scale index U_{12}	0.3281	0.2982	0.3131
					Characteristic parameter of roof rock stratum thickness U_{13}	0.1721	0.1102	0.1412
					Change of coal seam thickness U_{14}	0.1255	0.2980	0.2117
					Plane deformation coefficient U_{15}	0.0756	0.1250	0.1003
	Coal property factors U_2	0.5390	0.2112	0.3751	Impact energy index U_{21}	0.0734	0.1659	0.1196
					Elastic energy index U_{22}	0.1141	0.1683	0.1412
					Dynamic failure time U_{23}	0.1084	0.1525	0.1305
					Residual gas content U_{24}	0.1998	0.1309	0.1653
					Residual gas pressure U_{25}	0.2722	0.1289	0.2006
					Firmness coefficient U_{26}	0.0803	0.1348	0.1076
					Initial speed of gas release U_{27}	0.1518	0.1187	0.1353
	Mining technology factors U_3	0.1637	0.2346	0.1992	Coefficient of the protective layer U_{31}	0.1443	0.2270	0.1857
					Influence of goaf U_{32}	0.3199	0.2270	0.2735
					Mining speed U_{33}	0.3914	0.2844	0.3379
					Working face length U_{34}	0.1443	0.2616	0.2030

5.2.3. Evaluation Results

According to the membership evaluation matrix R and the comprehensive weight set Q obtained from the above calculation, the compound dynamic disaster risk evaluation matrix of the second mining area is $B = Q \times R$ = [0.6215, 1.1421, 0.9473, 0.2891]. According to the principle of maximum membership degree, B_{max} = 1.1421, and the risk level of compound dynamic disaster in the second mining area is II (weak risk).

The risk level of compound dynamic disaster in the 32,010 and 32,020 working faces is grade II (weak risk), and the risk level of compound dynamic disaster in the 32,040 working face is grade III (medium risk). This is because the thickness of coal seam in the 32,020 working face changes little, and the residual gas content and pressure are small. The protective layer of the 32,010 working face is less than 1 year, which is a solid coal working face, and the mining speed is slow. The elastic energy index of the 32,040 working face is higher, and the residual gas content and pressure are higher than other working faces. The division of compound dynamic disaster risk area in the second mining area is shown in Figure 5.

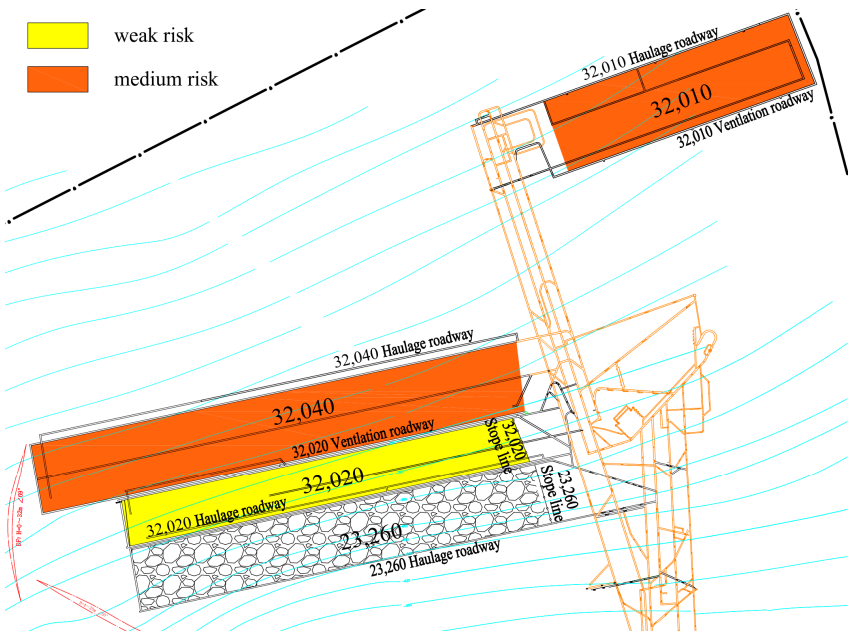

Figure 5. The division of compound dynamic disaster risk area in the second mining area.

According to the evaluation results, the second mining area has adopted measures, such as gas drainage through layer drilling, gas drainage through coal seam drilling and borehole pressure relief, to carry out the prevention and control of compound dynamic disasters. The parameters of various prevention and control measures are designed according to the weak danger level in the 32,010 working face, and there is no compound dynamic disaster in the mining process; thus, realizing safe production.

6. Conclusions

(1) According to the characteristics of compound dynamic disaster accidents and the principle of hierarchical structure, the compound dynamic disaster evaluation index system is divided into three levels. The first level is the target level, that is, the risk degree of the compound dynamic disasters. The second layer is the criterion layer, which includes three primary indices: geological factors, coal property factors and mining technology factors. The third layer is the indicator layer, that is, sixteen specific secondary indices such as mining depth, fault scale index and residual gas pressure corresponding to each primary index.

(2) The AHP-EWM is used to consider subjective and objective weights for comprehensive weighting, and to select the appropriate membership function of the compound dynamic disaster evaluation index to calculate the corresponding index membership and combine the comprehensive weight and membership matrix to calculate the evaluation results and evaluation grades, forming a new method of compound dynamic disaster risk evaluation.
(3) Compound dynamic disaster cannot be evaluated using the single dynamic disaster risk assessment method but must be evaluated using integration. The compound dynamic hazard assessment method based on the AHP-EWM comprehensively considers geological factors, coal property factors (coal impact tendency and gas conditions) and mining technology factors. The weights determined are scientific and reasonable, and the assessment results are highly consistent with the actual situation.
(4) Based on the AHP-EWM, the hazard assessment of compound dynamic disaster for the second working face of mine B in the Pingdingshan mining area is II (weak hazard). According to the evaluation results, the mining area adopts the corresponding technology to carry out the compound power disaster prevention and control. No compound dynamic disaster occurred in the mining process of the 32,010 working face, which realized safe production.

Author Contributions: Conceptualization, R.Z.; methodology, R.Z.; investigation, R.Z.; validation, D.T.; formal analysis, X.K.; resources, L.X.; data curation, H.W.; writing—original draft preparation, R.Z.; writing—review and editing, D.T.; project administration, G.W.; funding acquisition, L.X. All authors have read and agreed to the published version of the manuscript.

Funding: This research was funded by the National Natural Science Foundation of China (No. 51904141) and National Natural Science Foundation of China (No. U1908222).

Institutional Review Board Statement: Not applicable.

Informed Consent Statement: Not applicable.

Data Availability Statement: If you need research data, please communicate with the author.

Conflicts of Interest: The authors declare no conflict of interest.

References

1. Jiang, F.; Yang, G.; Wei, Q.; Wang, C.; Qu, X.; Zhu, S. Study and prospect on coal mine composite dynamic disaster real-time prewarning platform. *J. China Coal Soc.* **2018**, *43*, 333–339.
2. Pan, Y. Integrated study on compound dynamic disaster of coal-gas outburst and rockburst. *J. China Coal Soc.* **2016**, *41*, 105–112.
3. Pan, Y.; Xu, L. Experimental investigation on temperature of drilling cuttings to predict rock burst. *Chin. J. Geotech. Eng.* **2012**, *34*, 2228–2232.
4. Yin, G.; Li, X.; Lu, J.; Li, M. Disaster-causing mechanism of compound dynamic disaster in deep mining under static and dynamic load conditions. *J. China Coal Soc.* **2017**, *42*, 2316–2326.
5. Cheng, Z.; Liu, B.; Zou, Q.; Wang, X.; Feng, J.; Zhao, Z.; Sun, F. Analysis of Spatial-Temporal Evolution of Mining-Induced Fracture Field: A Case Study Using Image Processing in the Shaqu Coal Mine, China. *Nat. Resour. Res.* **2020**, *29*, 1601–1615. [CrossRef]
6. Zhu, J.; Wang, Q.; Tang, J.; Chen, J.; Jiang, Y.; Tang, D.; Lan, T. Evolution characteristics of strain and permeability of coal samples under loading and unloading conditions. *J. China Coal Soc.* **2021**, *46*, 1203–1210.
7. Zhu, L.; Pan, Y.; Li, Z.; Xu, L. Mechanisms of rockburst and outburst compound disaster in deep mine. *J. China Coal Soc.* **2018**, *43*, 3042–3050.
8. Zhang, Q.M.; Wang, E.Y.; Feng, X.J.; Wang, C.; Qiu, L.M.; Wang, H. Assessment of Rockburst Risk in Deep Mining: An Improved Comprehensive Index Method. *Nat. Resour. Res.* **2021**, *30*, 1817–1834. [CrossRef]
9. Huang, S.L.; Ding, X.L.; Wu, A.Q. Attribute Recognition Analysis Method Based on Entropy Weight for Comprehensive Assessment and Prediction of Rockburst Risk. In Proceedings of the 2009 International Symposium on Risk Control and Management of Design, Construction and Operation in Underground Engineering, Dalian, China, 20–22 October 2009.
10. Du, J.S.; Chen, J.; Pu, Y.Y.; Jiang, D.Y.; Chen, L.L.; Zhang, Y.R. Risk assessment of dynamic disasters in deep coal mines based on multi-source, multi-parameter indexes, and engineering application. *Process Saf. Environ. Prot.* **2021**, *155*, 575–586. [CrossRef]
11. He, S.Q.; Song, D.Z.; Mitri, H.; He, X.Q.; Chen, J.Q.; Li, Z.L.; Xue, Y.R.; Chen, T. Integrated rockburst early warning model based on fuzzy comprehensive evaluation method. *Int. J. Rock Mech. Min. Sci.* **2021**, *142*, 104767. [CrossRef]

12. Zhang, K.; Kang, L.; He, M.; Liu, J.; Cheng, Z.; Sun, J.; Li, D.; Zhao, Q.; Yin, S.; Shangguan, F.; et al. Research on multi-level comprehensive evaluation of coal seam rockburst risk in underground mine. *Coal Sci. Technol.* **2020**, *48*, 82–89.
13. Cai, W.; Dou, L.; Zhang, M.; Cao, W.; Shi, J.-Q.; Feng, L. A fuzzy comprehensive evaluation methodology for rock burst forecasting using microseismic monitoring. *Tunn. Undergr. Space Technol.* **2018**, *80*, 232–245. [CrossRef]
14. Wang, C.; Xu, J.H.; Li, Y.F.; Wang, T.H.; Wang, Q.W. Optimization of BP Neural Network Model for Rockburst Prediction under Multiple Influence Factors. *Appl. Sci.* **2023**, *13*, 2741. [CrossRef]
15. Liang, W.Z.; Sari, Y.A.; Zhao, G.Y.; McKinnon, S.D.; Wu, H. Probability Estimates of Short-Term Rockburst Risk with Ensemble Classifiers. *Rock Mech. Rock Eng.* **2021**, *54*, 1799–1814. [CrossRef]
16. Hosseini, N. Evaluation of the rockburst potential in longwall coal mining using passive seismic velocity tomography and image subtraction technique. *J. Seismol.* **2017**, *21*, 1101–1110. [CrossRef]
17. He, X.; Chen, W.; Nie, B.; Zhang, M. Classification technique for danger classes of coal and gas outburst in deep coal mines. *Saf. Sci.* **2010**, *48*, 173–178. [CrossRef]
18. Rong, H.; Zhang, H.; Liang, B.; Song, W. Analysis of the Occurrence Mechanism for Coal and Gas Outburst Based on Multiple Discriminant Indices. *Shock Vib.* **2019**, *2019*, 7572910. [CrossRef]
19. Gu, B.; Zhang, M. Assessment of risk tendency of coal bursting pressure in deep outburst seam based on fuzzy evaluation method. *J. Intell. Fuzzy Syst.* **2021**, 1–9. [CrossRef]
20. Zhang, H.; He, X.; Mitri, H. Fuzzy comprehensive evaluation of virtual reality mine safety training system. *Saf. Sci.* **2019**, *120*, 341–351. [CrossRef]
21. Wang, W.; Wang, H.; Zhang, B.; Wang, S.; Xing, W. Coal and gas outburst prediction model based on extension theory and its application. *Process Saf. Environ. Prot.* **2021**, *154*, 329–337. [CrossRef]
22. Zhang, Z.; Liu, X.; Li, Z.; Hu, H. Outburst prediction and influencing factors analysis based on Boruta-Apriori and BO-SVM algorithms. *J. Intell. Fuzzy Syst.* **2021**, *41*, 3201–3218. [CrossRef]
23. Wu, Y.; Gao, R.; Yang, J. Prediction of coal and gas outburst: A method based on the BP neural network optimized by GASA. *Process Saf. Environ. Prot.* **2020**, *133*, 64–72. [CrossRef]
24. Yin, Y.; Zhang, X.; Jiang, F.; Yu, Z. Study on mechanical mechanism and danger evaluation technology of coal and gas outburst induced by rockburst. *J. Min. Saf. Eng.* **2018**, *35*, 801–809. [CrossRef]
25. Ouyang, Z.; Zhang, G.; Qin, H. Improved comprehensive index evaluation method and its application on rockburst hazard of gas coal seam. *Coal Sci. Technol.* **2018**, *46*, 30–36.
26. Arikan, R.A.; Dağdeviren, M.; Kurt, M. A Fuzzy Multi-Attribute Decision Making Model for Strategic Risk Assessment. *Int. J. Comput. Intell. Syst.* **2013**, *6*, 487–502. [CrossRef]
27. Li, F.; Phoon, K.K.; Du, X.; Zhang, M. Improved AHP Method and Its Application in Risk Identification. *J. Constr. Eng. Manag.* **2013**, *139*, 312–320. [CrossRef]
28. Liang, M.; Yang, G.; Zhu, X.; Cheng, H.; Zheng, L.; Liu, H.; Dong, X.; Zhang, Y. AHP-EWM based model selection system for subsidence area research. *Sustainability* **2023**, *15*, 7135. [CrossRef]
29. Sun, N.; Li, C.; Guo, B.; Sun, X.; Yao, Y.; Wang, Y.M. Urban flooding risk assessment based on FAHP–EWM combination weighting: A case study of Beijing. *Geomat. Nat. Hazards Risk* **2023**, *14*, 2240943. [CrossRef]
30. Hu, Y.; Li, W.; Wang, Q.; Liu, S.; Wang, Z. Evaluation of water inrush risk from coal seam floors with an AHP–EWM algorithm and GIS. *Environ. Earth Sci.* **2019**, *78*, 290. [CrossRef]
31. Black, D.J. Review of coal and gas outburst in Australian underground coal mines. *Int. J. Min. Sci. Technol.* **2019**, *29*, 815–824. [CrossRef]
32. Cao, Y.X.; He, D.D.; Glick, D.C. Coal and gas outbursts in footwalls of reverse faults. *Int. J. Coal Geol.* **2001**, *48*, 47–63. [CrossRef]
33. Fisne, A.; Esen, O. Coal and gas outburst hazard in Zonguldak Coal Basin of Turkey, and association with geological parameters. *Nat. Hazards* **2014**, *74*, 1363–1390. [CrossRef]
34. Keneti, A.; Sainsbury, B.A. Review of published rockburst events and their contributing factors. *Eng. Geol.* **2018**, *246*, 361–373. [CrossRef]
35. Ma, Y.K.; Nie, B.S.; He, X.Q.; Li, X.C.; Meng, J.Q.; Song, D.Z. Mechanism investigation on coal and gas outburst: An overview. *Int. J. Miner. Metall. Mater.* **2020**, *27*, 872–887. [CrossRef]
36. Xu, C.; Yang, T.; Wang, K.; Guo, L.; Li, X. Knowledge domain and hotspot trends in coal and gas outburst: A scientometric review based on CiteSpace analysis. *Environ. Sci. Pollut. Res.* **2022**, *30*, 29086–29099. [CrossRef]
37. Zhang, Q.; Wang, E.; Feng, X.; Niu, Y.; Ali, M.; Lin, S.; Wang, H. Rockburst Risk Analysis During High-Hard Roof Breaking in Deep Mines. *Nat. Resour. Res.* **2020**, *29*, 4085–4101. [CrossRef]
38. Pan, Y. *Coal Mine Rockburst*; Science Press: Beijing, China, 2018.
39. Wang, P.; Jiang, L.-s.; Zheng, P.-q.; Qin, G.-p.; Zhang, C. Inducing mode analysis of rock burst in fault-affected zone with a hard-thick stratum occurrence. *Environ. Earth Sci.* **2019**, *78*, 467. [CrossRef]
40. Zhu, G.; Dou, L.; Li, Z.; Cai, W.; Kong, Y.; Li, J. Mining-induced stress changes and rock burst control in a variable-thickness coal seam. *Arab. J. Geosci.* **2016**, *9*, 365. [CrossRef]
41. Xie, Z. Main controlling factors of coal-gas explosive outbursts based on the fold study. *Appl. Mech. Mater.* **2013**, *13*, 202–206.
42. Gong, F.; Zhao, Y.; Wang, Y.; Peng, K. Research progress of coal bursting liability indices and coal burst Human-Coal-Environment three elements mechanism. *J. China Coal Soc.* **2022**, *47*, 1974–2010.

43. Li, D. Mining thin sub-layer as self-protective coal seam to reduce the danger of coal and gas outburst. *Nat. Hazards* **2014**, *71*, 41–52. [CrossRef]
44. Li, W.; Tu, S.; Tu, H.; Liu, X.; Miao, K.; Zhao, H.; Ma, J.; Tang, L.; Li, Y. A New Method to Assess Thick, Hard Roof-Induced Rock Burst Risk Based on Mining Speed Effect on Key Energy Strata. *Sustainability* **2022**, *14*, 15054. [CrossRef]
45. Liu, D.; Zou, Z. Water quality evaluation based on improved fuzzy matter-element method. *J. Environ. Sci.* **2012**, *24*, 1210–1216. [CrossRef] [PubMed]
46. Molaeezadeh, S.F.; Moradi, M.H. Bifurcating fuzzy sets: Theory and application. *Neurocomputing* **2013**, *118*, 268–278. [CrossRef]
47. Qian, G.; Wang, H.; Feng, X. Generalized hesitant fuzzy sets and their application in decision support system. *Knowl.-Based Syst.* **2013**, *37*, 357–365. [CrossRef]
48. Karahalios, H.; Yang, Z.L.; Williams, V.; Wang, J. A proposed System of Hierarchical Scorecards to assess the implementation of maritime regulations. *Saf. Sci.* **2011**, *49*, 450–462. [CrossRef]
49. Zheng, G.Z.; Zhu, N.; Tian, Z.; Chen, Y.; Sun, B.H. Application of a trapezoidal fuzzy AHP method for work safety evaluation and early warning rating of hot and humid environments. *Saf. Sci.* **2012**, *50*, 228–239. [CrossRef]
50. Arunraj, N.S.; Maiti, J. Risk-based maintenance policy selection using AHP and goal programming. *Saf. Sci.* **2010**, *48*, 238–247. [CrossRef]
51. Dong, Q.; Cooper, O. An orders-of-magnitude AHP supply chain risk assessment framework. *Int. J. Prod. Econ.* **2016**, *182*, 144–156. [CrossRef]
52. Erdin, C.; Çağlar, M. Rural Fire Risk Assessment in GIS Environment Using Fuzzy Logic and the AHP Approaches. *Pol. J. Environ. Stud.* **2021**, *30*, 4971–4984. [CrossRef]
53. Kaur, S.; Singh, S.; Gupta, S.; Wats, S. Risk analysis in decentralized finance (DeFi): A fuzzy-AHP approach. *Risk Manag.* **2023**, *25*, 13. [CrossRef]
54. Delgado, A.; Romero, I. Environmental conflict analysis using an integrated grey clustering and entropy-weight method: A case study of a mining project in Peru. *Environ. Model. Softw.* **2016**, *77*, 108–121. [CrossRef]
55. Qu, W.; Li, J.; Song, W.; Li, X.; Zhao, Y.; Dong, H.; Wang, Y.; Zhao, Q.; Qi, Y. Entropy-Weight-Method-Based Integrated Models for Short-Term Intersection Traffic Flow Prediction. *Entropy* **2022**, *24*, 849. [CrossRef] [PubMed]
56. Yan, F.; Yi, F.; Chen, L. Improved Entropy Weighting Model in Water Quality Evaluation. *Water Resour. Manag.* **2019**, *33*, 2049–2056. [CrossRef]
57. Liu, S. Research on the Evaluation Method of Coal Seam Floor Water Bursting and Its Application. Ph.D. Thesis, China University of Mining and Technology, Beijing, China, 2012.
58. Chen, F.; Cao, A.; Dou, L.; Jing, G.; Wang, C. Method of coal burst hazard assessment based on region division and identification of main impact factors. *J. China Coal Soc.* **2018**, *43*, 607–615. [CrossRef]
59. Dou, L.; He, X. *Theory and Technology of Rockburst Prevention*; China University of Mining and Technology Press: Xuzhou, China, 2001.
60. Shang, X.; Yang, H.; Ai, G.; Zhang, Y.; Zhu, G. Mining-induced stress changes and rock burst effect in thickness variation of a coal seam. *China Min. Mag.* **2020**, *29*, 148–151+157.
61. Liu, Q.; Cao, H.; Zhai, J.; Han, Z.; Zhou, B.; Liu, T. Analysis on influence of coal seam occurrence conditions on rock burst risk in 1310 working face. *Coal Sci. Technol. Mag.* **2021**, *42*, 76–80+84. [CrossRef]
62. Xu, J. Research on Prevention and Control Technology of Rock Burst in Thick Coal Seam of Binchang Mining Area. *Inn. Mong. Coal Econ.* **2020**, *18*, 28–29. [CrossRef]
63. Yuan, C.; Zhang, Z.; Zhang, G. Disvussion and application of deformation coefficients of fold. *J. China Coal Soc.* **1992**, *17*, 11–18.

Disclaimer/Publisher's Note: The statements, opinions and data contained in all publications are solely those of the individual author(s) and contributor(s) and not of MDPI and/or the editor(s). MDPI and/or the editor(s) disclaim responsibility for any injury to people or property resulting from any ideas, methods, instructions or products referred to in the content.