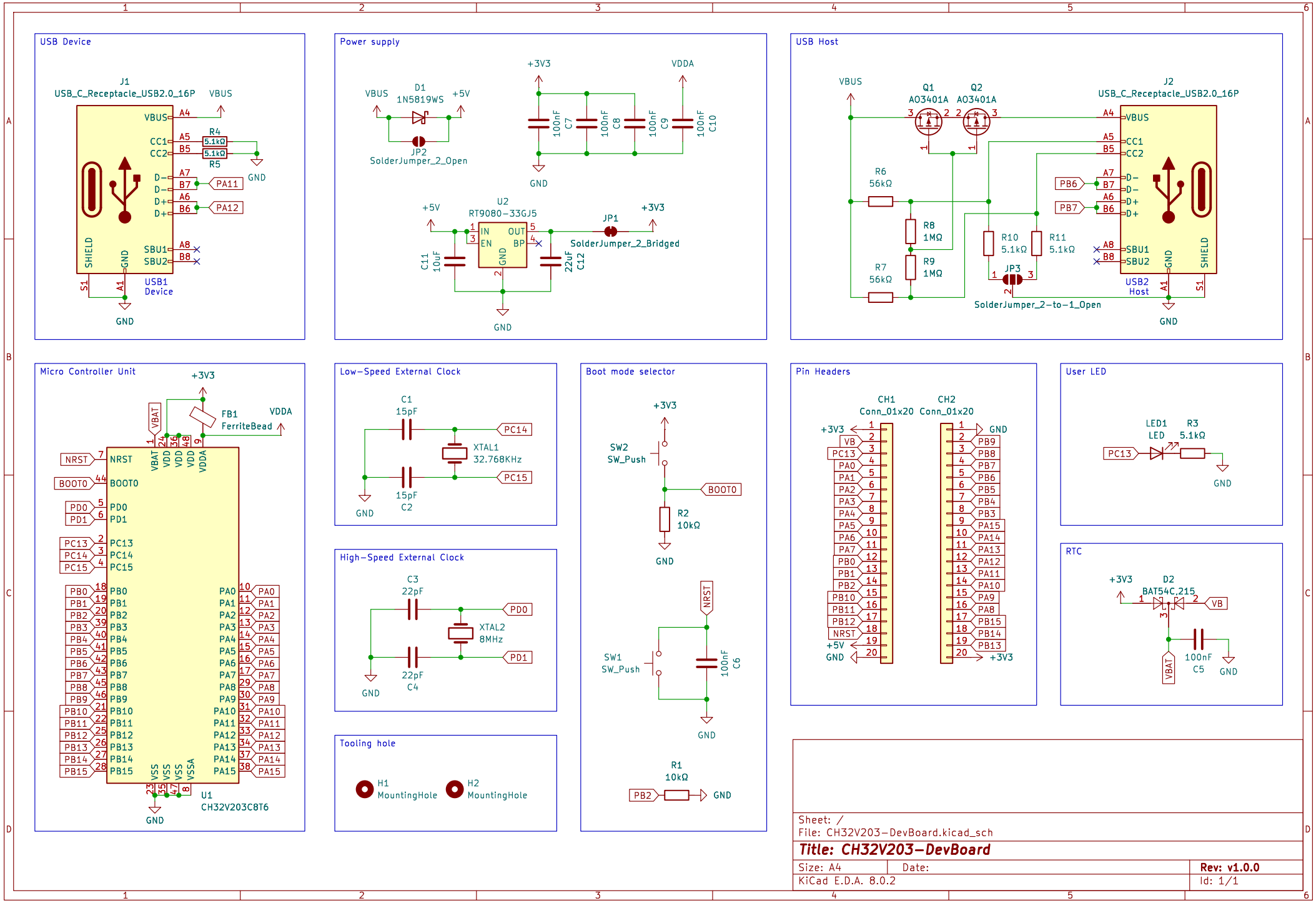
USB Device
J1
USB_C_Receptacle_USB2.0_16P
VBUS
CC1
CC2
D−
D+
SBU1
SBU2
SHIELD
GND
R4
5.1kΩ
R5
5.1kΩ
PA11
PA12
USB1
Device
Power supply
D1
1N5819WS
+5V
JP2
SolderJumper_2_Open
+3V3
VDDA
100nF C7
100nF C8
100nF C9
100nF C10
U2
RT9080−33GJ5
IN
EN
OUT
BP
C11
10uF
22uF C12
JP1
SolderJumper_2_Bridged
USB Host
Q1
AO3401A
Q2
AO3401A
J2
USB_C_Receptacle_USB2.0_16P
R6
56kΩ
R7
56kΩ
R8
1MΩ
R9
1MΩ
R10
5.1kΩ
R11
5.1kΩ
JP3
SolderJumper_2−to−1_Open
PB6
PB7
USB2
Host
Micro Controller Unit
FB1
FerriteBead
VDDA
VBAT
NRST
BOOT0
PD0
PD1
PC13
PC14
PC15
PB0
PB1
PB2
PB3
PB4
PB5
PB6
PB7
PB8
PB9
PB10
PB11
PB12
PB13
PB14
PB15
PA0
PA1
PA2
PA3
PA4
PA5
PA6
PA7
PA8
PA9
PA10
PA11
PA12
PA13
PA14
PA15
VSS
VSSA
U1
CH32V203C8T6
Low−Speed External Clock
C1
15pF
XTAL1
32.768KHz
C2
15pF
High−Speed External Clock
C3
22pF
XTAL2
8MHz
C4
22pF
Tooling hole
H1
MountingHole
H2
MountingHole
Boot mode selector
SW2
SW_Push
R2
10kΩ
SW1
SW_Push
100nF C6
R1
10kΩ
Pin Headers
CH1
Conn_01x20
CH2
Conn_01x20
User LED
LED1
LED
R3
5.1kΩ
RTC
D2
BAT54C,215
100nF
C5
Sheet: /
File: CH32V203−DevBoard.kicad_sch
Title: CH32V203−DevBoard
Size: A4
Date:
Rev: v1.0.0
KiCad E.D.A. 8.0.2
Id: 1/1