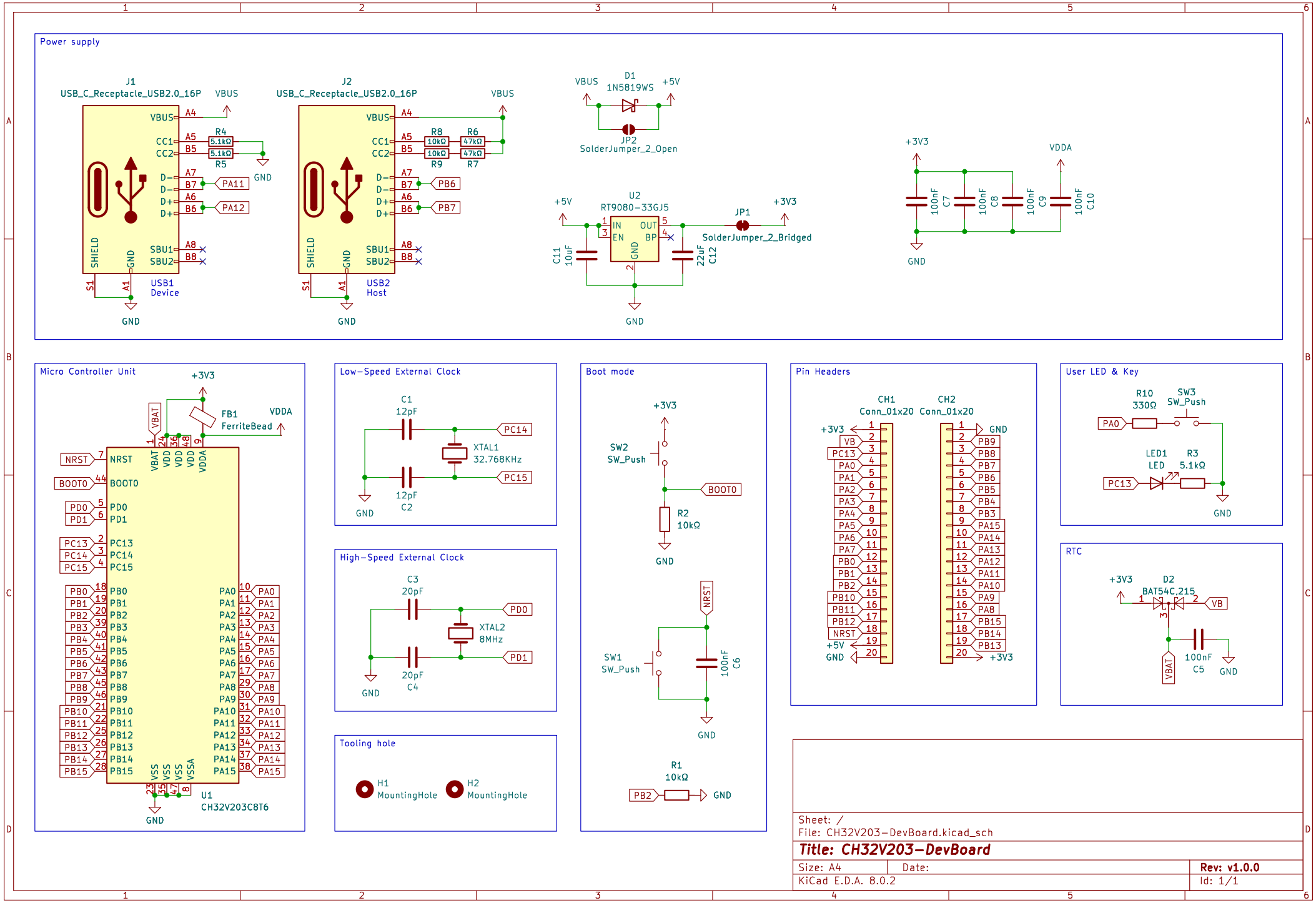
Power supply
J1
USB_C_Receptacle_USB2.0_16P
VBUS
CC1
CC2
D−
D+
SHIELD
GND
SBU1
SBU2
S1
A1
USB1
Device
R4
5.1kΩ
R5
5.1kΩ
PA11
PA12
J2
USB_C_Receptacle_USB2.0_16P
USB2
Host
R8
10kΩ
R9
10kΩ
R6
47kΩ
R7
47kΩ
PB6
PB7
D1
1N5819WS
+5V
JP2
SolderJumper_2_Open
U2
RT9080−33GJ5
IN
EN
OUT
BP
C11
10uF
22uF
C12
JP1
SolderJumper_2_Bridged
+3V3
VDDA
100nF
C7
C8
C9
C10
Micro Controller Unit
FB1
FerriteBead
VBAT
NRST
BOOT0
PD0
PD1
PC13
PC14
PC15
PB0
PB1
PB2
PB3
PB4
PB5
PB6
PB7
PB8
PB9
PB10
PB11
PB12
PB13
PB14
PB15
PA0
PA1
PA2
PA3
PA4
PA5
PA6
PA7
PA8
PA9
PA10
PA11
PA12
PA13
PA14
PA15
VSS
VSSA
U1
CH32V203C8T6
Low−Speed External Clock
C1
12pF
C2
12pF
XTAL1
32.768KHz
High−Speed External Clock
C3
20pF
C4
20pF
XTAL2
8MHz
Tooling hole
H1
MountingHole
H2
MountingHole
Boot mode
SW2
SW_Push
R2
10kΩ
SW1
SW_Push
100nF
C6
R1
10kΩ
Pin Headers
CH1
Conn_01x20
CH2
Conn_01x20
User LED & Key
R10
330Ω
SW3
SW_Push
LED1
LED
R3
5.1kΩ
RTC
D2
BAT54C,215
VB
100nF
C5
Sheet: /
File: CH32V203−DevBoard.kicad_sch
Title: CH32V203−DevBoard
Size: A4
Date:
Rev: v1.0.0
KiCad E.D.A. 8.0.2
Id: 1/1