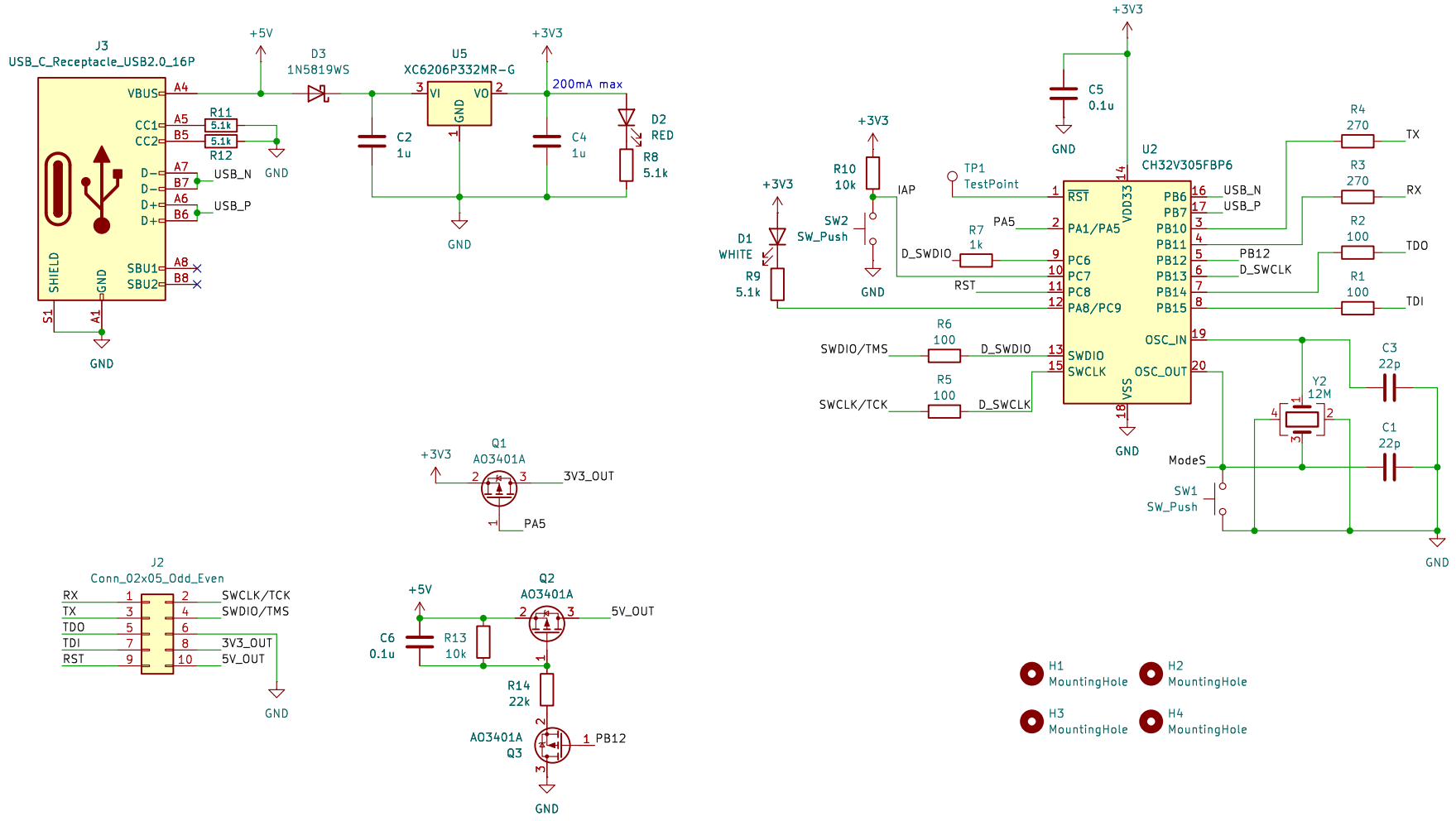

Sheet: /
File: WCH−LinkE.kicad_sch

Title: WCH−LinkE−Mini

Size: A4	Date:	**Rev: v1.1.0**
KiCad E.D.A. 8.0.5		Id: 1/1