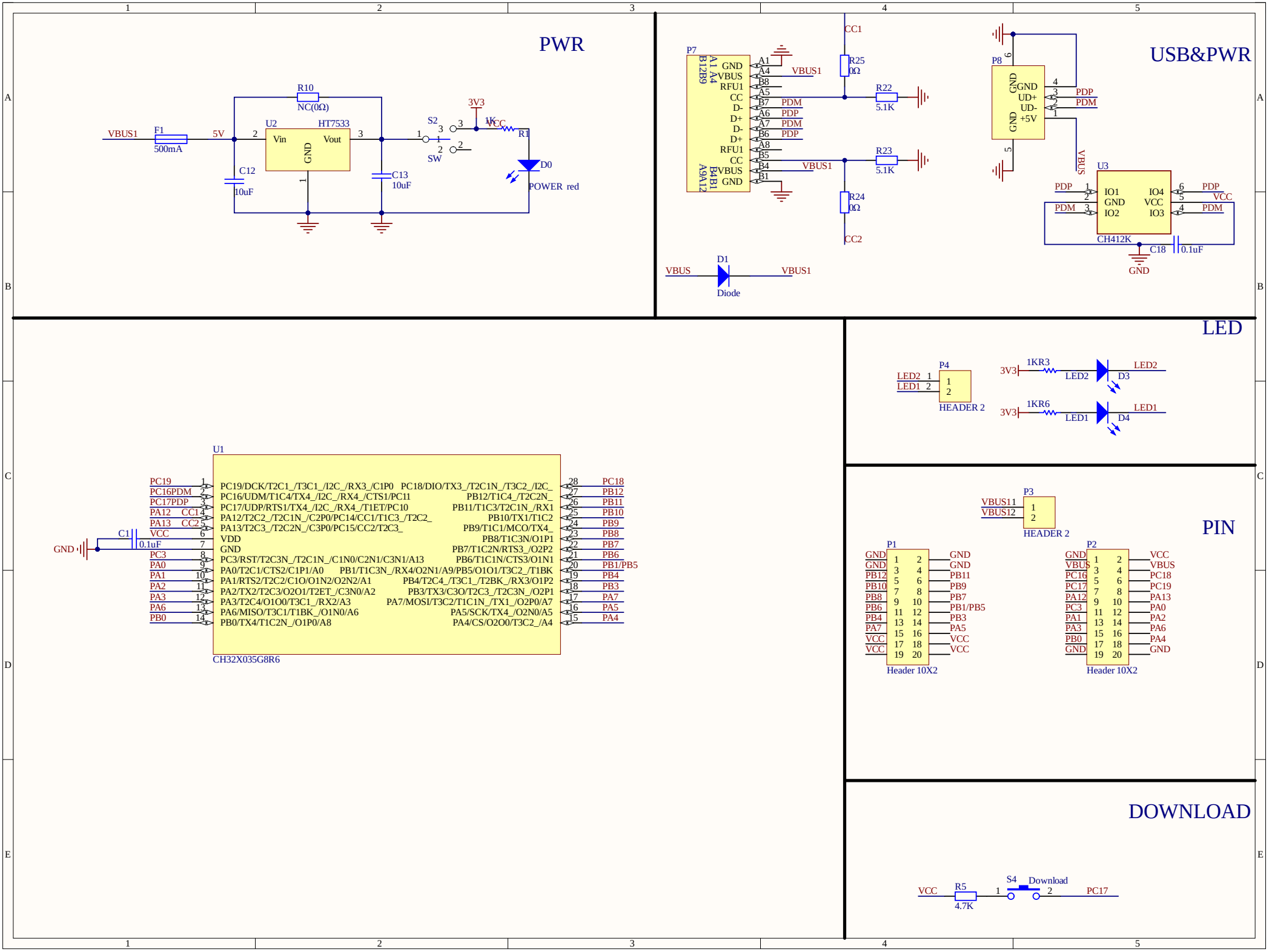
PWR
R10
NC(0Ω)
VBUS1
F1
500mA
5V
U2
HT7533
Vin
Vout
GND
C12
10uF
C13
10uF
3V3
S2
SW
1K
VCC
R1
D0
POWER red
USB&PWR
P7
GND
VBUS
RFU1
CC
D-
D+
D-
D+
RFU1
CC
VBUS
GND
A1 A4
B12B9
B4B1
A9A12
PDM
PDP
PDM
PDP
CC1
R25
0Ω
R22
5.1K
R23
5.1K
R24
0Ω
CC2
VBUS1
D1
Diode
VBUS
P8
GND
UD+
UD-
+5V
PDP
PDM
U3
IO1
GND
IO2
IO4
VCC
IO3
CH412K
C18
0.1uF
GND
LED
P4
LED2
LED1
HEADER 2
3V3
1KR3
1KR6
D3
D4
PIN
P3
VBUS11
VBUS12
HEADER 2
P1
Header 10X2
P2
Header 10X2
U1
CH32X035G8R6
C1
0.1uF
DOWNLOAD
VCC
R5
4.7K
S4
Download
PC17

PWR

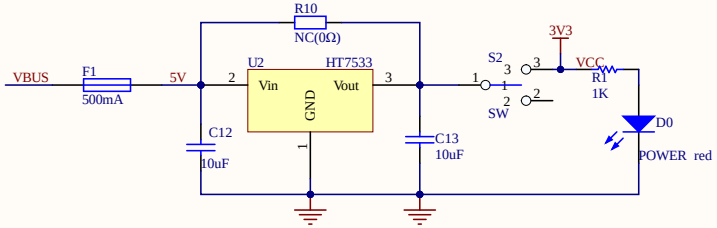

USB&PWR

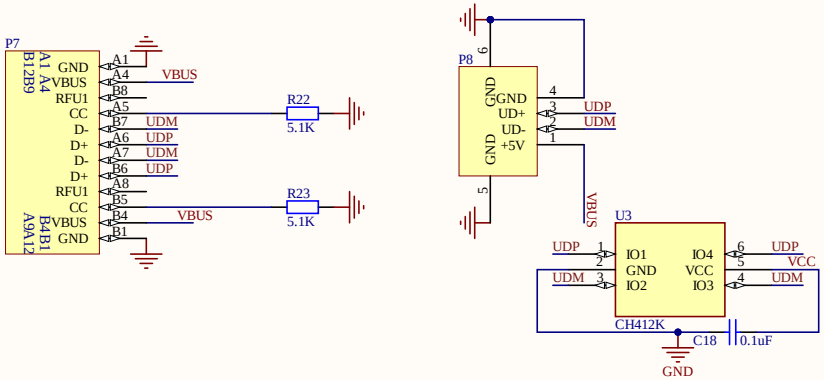

MCU

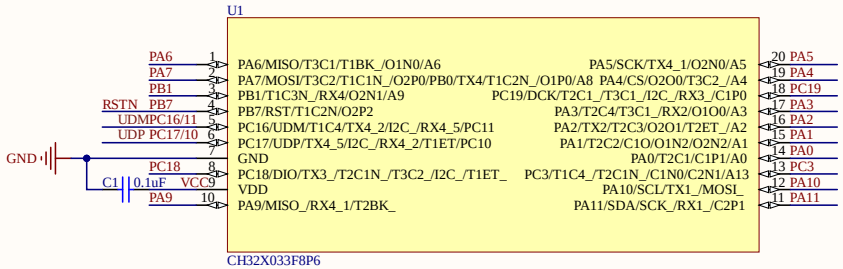

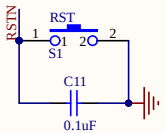

LED

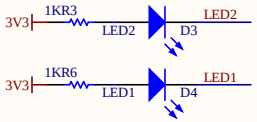

PIN

DOWNLOAD

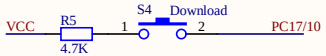

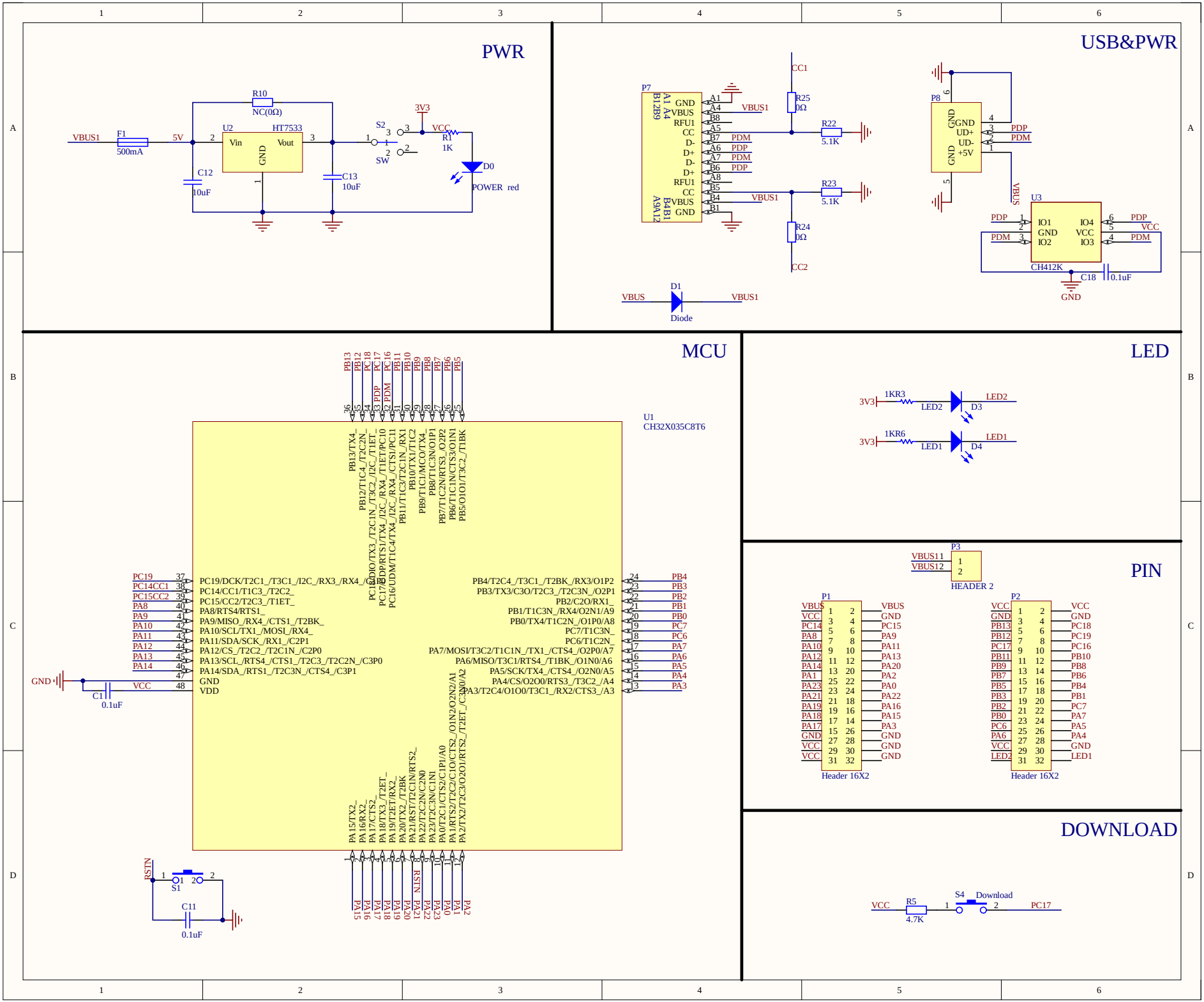
PWR
VBUS1
F1
500mA
5V
R10
NC(0Ω)
U2
HT7533
Vin
Vout
GND
C12
10uF
C13
10uF
S2
SW
3V3
VCC
R1
1K
D0
POWER red
USB&PWR
P7
GND
VBUS
RFU1
CC
D-
D+
RFU1
CC
VBUS
GND
VBUS1
PDM
PDP
CC1
R25
0Ω
R22
5.1K
R23
5.1K
R24
0Ω
CC2
P8
GND
UD+
UD-
+5V
U3
IO1
GND
IO2
IO4
VCC
IO3
CH412K
C18
0.1uF
D1
Diode
MCU
U1
CH32X035C8T6
PC19/DCK/T2C1_/T3C1_/I2C_/RX3_/RX4_/C
PC14/CC1/T1C3_/T2C2_
PC15/CC2/T2C3_/T1ET_
PA8/RTS4/RTS1_
PA9/MISO_/RX4_/CTS1_/T2BK_
PA10/SCL/TX1_/MOSI_/RX4_
PA11/SDA/SCK_/RX1_/C2P1
PA12/CS_/T2C2_/T2C1N_/C2P0
PA13/SCL_/RTS4_/CTS1_/T2C3_/T2C2N_/C3P0
PA14/SDA_/RTS1_/T2C3N_/CTS4_/C3P1
GND
VDD
PB4/T2C4_/T3C1_/T2BK_/RX3/O1P2
PB3/TX3/C3O/T2C3_/T2C3N_/O2P1
PB2/C2O/RX1_
PB1/T1C3N_/RX4/O2N1/A9
PB0/TX4/T1C2N_/O1P0/A8
PC7/T1C3N_
PC6/T1C2N_
PA7/MOSI/T3C2/T1C1N_/TX1_/CTS4_/O2P0/A7
PA6/MISO/T3C1/RTS4_/T1BK_/O1N0/A6
PA5/SCK/TX4_/CTS4_/O2N0/A5
PA4/CS/O2O0/RTS3_/T3C2_/A4
PA3/T2C4/O1O0/T3C1_/RX2/CTS3_/A3
C1
0.1uF
RSTN
S1
C11
0.1uF
LED
3V3
1KR3
LED2
D3
1KR6
LED1
D4
PIN
P3
VBUS11
VBUS12
HEADER 2
P1
Header 16X2
P2
Header 16X2
DOWNLOAD
VCC
R5
4.7K
S4
Download
PC17

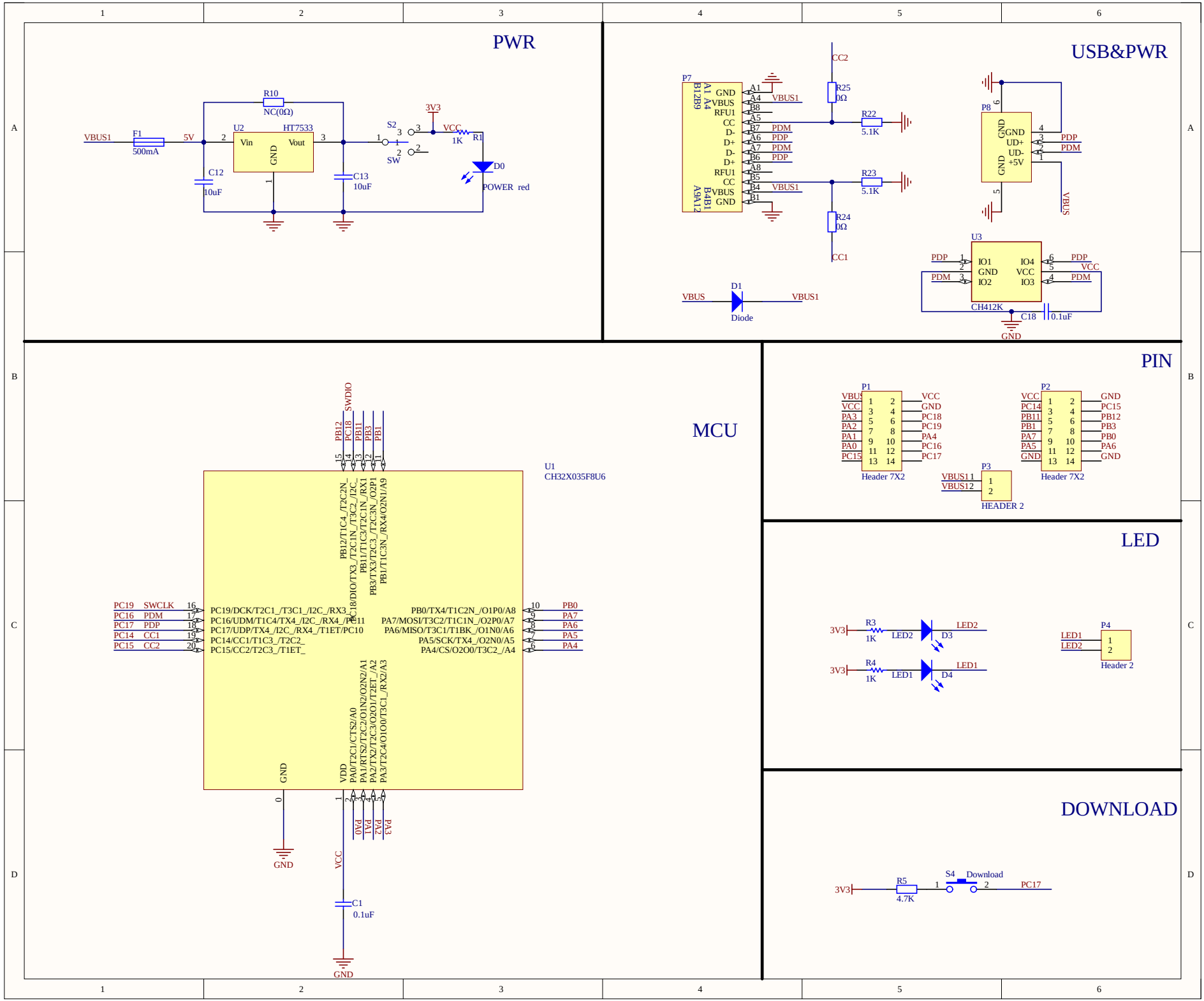
PWR
VBUS1
F1
500mA
5V
R10
NC(0Ω)
U2
HT7533
Vin
Vout
GND
C12
10uF
C13
10uF
3V3
S2
SW
VCC
1K
R1
D0
POWER red
USB&PWR
P7
GND
VBUS
RFU1
CC
D-
D+
D-
D+
RFU1
CC
VBUS
GND
A1 A4
B12B9
A9A12
B4B1
VBUS1
PDM
PDP
PDM
PDP
CC2
R25
0Ω
R22
5.1K
R23
5.1K
R24
0Ω
CC1
P8
GND
UD+
UD-
+5V
PDP
PDM
VBUS
U3
IO1
GND
IO2
IO4
VCC
IO3
CH412K
C18
0.1uF
GND
D1
Diode
VBUS
VBUS1
MCU
U1
CH32X035F8U6
PB12
PC18
PB11
PB3
PB1
SWDIO
PB12/T1C4_/T2C2N_
PC18/DIO/TX3_/T2C1N_/T3C2_/I2C_
PB11/T1C3/T2C1N_/RX1
PB3/TX3/T2C3_/T2C3N_/O2P1
PB1/T1C3N_/RX4/O2N1/A9
PC19 SWCLK
PC16 PDM
PC17 PDP
PC14 CC1
PC15 CC2
PC19/DCK/T2C1_/T3C1_/I2C_/RX3_
PC16/UDM/T1C4/TX4_/I2C_/RX4_/PC11
PC17/UDP/TX4_/I2C_/RX4_/T1ET/PC10
PC14/CC1/T1C3_/T2C2_
PC15/CC2/T2C3_/T1ET_
PB0/TX4/T1C2N_/O1P0/A8
PA7/MOSI/T3C2/T1C1N_/O2P0/A7
PA6/MISO/T3C1/T1BK_/O1N0/A6
PA5/SCK/TX4_/O2N0/A5
PA4/CS/O2O0/T3C2_/A4
PB0
PA7
PA6
PA5
PA4
GND
VDD
PA0/T2C1/CTS2/A0
PA1/RTS2/T2C2/O1N2/O2N2/A1
PA2/TX2/T2C3/O2O1/T2ET_/A2
PA3/T2C4/O1O0/T3C1_/RX2/A3
PA0
PA1
PA2
PA3
GND
VCC
C1
0.1uF
GND
PIN
P1
VBUS
VCC
PA3
PA2
PA1
PA0
PC15
VCC
GND
PC18
PC19
PA4
PC16
PC17
Header 7X2
P2
VCC
PC14
PB11
PB1
PA7
PA5
GND
GND
PC15
PB12
PB3
PB0
PA6
GND
Header 7X2
P3
VBUS11
VBUS12
HEADER 2
LED
3V3
R3
1K
LED2
LED2
D3
3V3
R4
1K
LED1
LED1
D4
P4
LED1
LED2
Header 2
DOWNLOAD
3V3
R5
4.7K
S4
Download
PC17

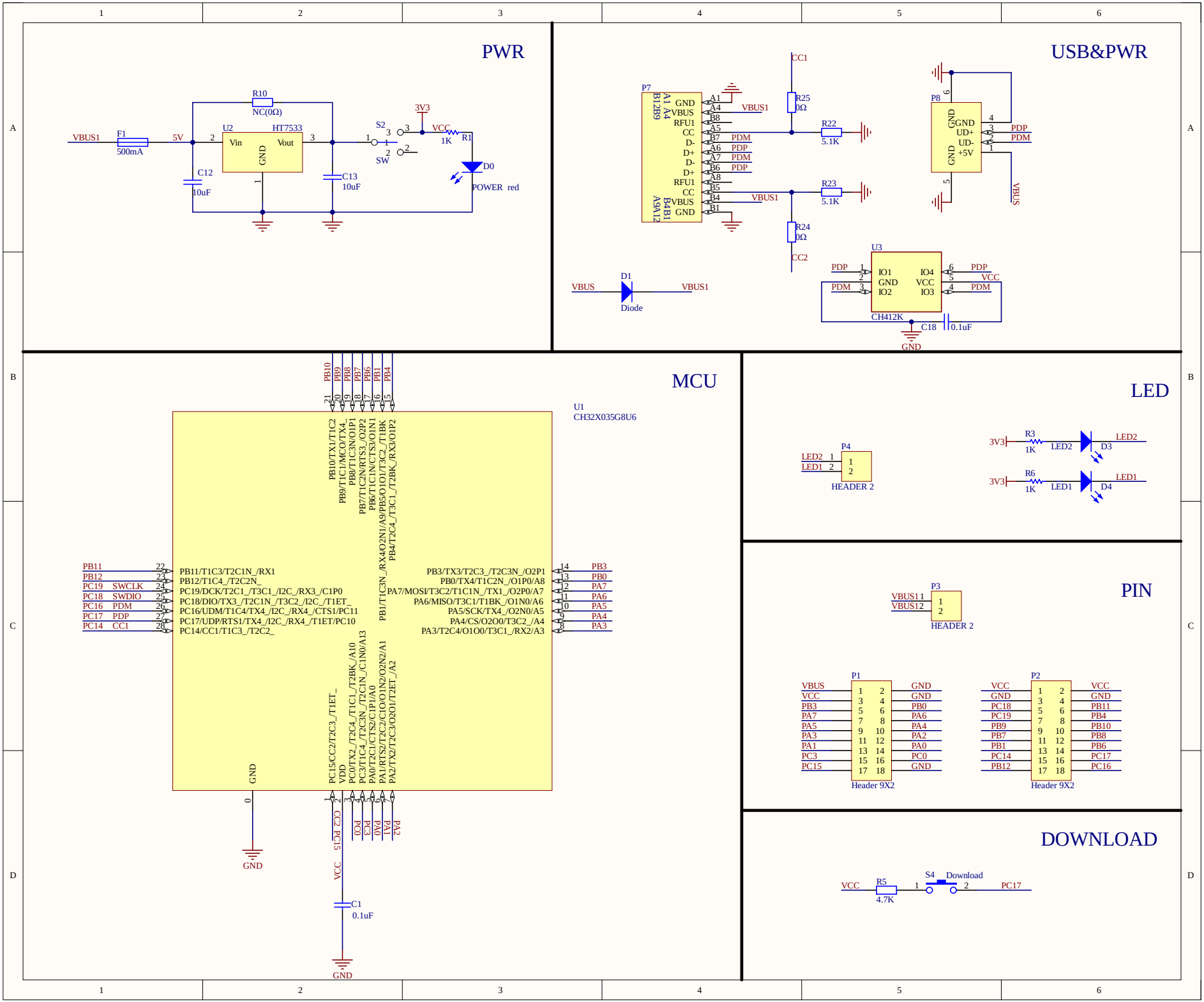
PWR
VBUS1
F1
500mA
5V
R10
NC(0Ω)
U2
HT7533
Vin
Vout
GND
C12
10uF
C13
10uF
3V3
S2
SW
VCC
R1
1K
D0
POWER red
USB&PWR
P7
GND
VBUS
RFU1
CC
D-
D+
D-
D+
RFU1
CC
VBUS
GND
A1 A4
B12B9
B4B1
A9A12
PDM
PDP
PDM
PDP
VBUS1
VBUS1
CC1
R25
0Ω
R22
5.1K
R23
5.1K
R24
0Ω
CC2
P8
GND
UD+
UD-
+5V
PDP
PDM
VBUS
U3
IO1
GND
IO2
IO4
VCC
IO3
PDP
VCC
PDM
CH412K
C18
0.1uF
GND
D1
Diode
VBUS
VBUS1
MCU
U1
CH32X035G8U6
PB10
PB9
PB8
PB7
PB6
PB1
PB4
PB10/TX1/T1C2
PB9/T1C1/MCO/TX4_
PB8/T1C3N/O1P1
PB7/T1C2N/RTS3_/O2P2
PB6/T1C1N/CTS3/O1N1
PB4/T2C4_/T3C1_/T2BK_/RX3/O1P2
PB11/T1C3/T2C1N_/RX1
PB12/T1C4_/T2C2N_
PC19/DCK/T2C1_/T3C1_/I2C_/RX3_/C1P0
PC18/DIO/TX3_/T2C1N_/T3C2_/I2C_/T1ET_
PC16/UDM/T1C4/TX4_/I2C_/RX4_/CTS1/PC11
PC17/UDP/RTS1/TX4_/I2C_/RX4_/T1ET/PC10
PC14/CC1/T1C3_/T2C2_
PB11
PB12
PC19 SWCLK
PC18 SWDIO
PC16 PDM
PC17 PDP
PC14 CC1
PB1/T1C3N_/RX4/O2N1/A9/PB5/O1O1/T3C2_/T1BK
PB3/TX3/T2C3_/T2C3N_/O2P1
PB0/TX4/T1C2N_/O1P0/A8
PA7/MOSI/T3C2/T1C1N_/TX1_/O2P0/A7
PA6/MISO/T3C1/T1BK_/O1N0/A6
PA5/SCK/TX4_/O2N0/A5
PA4/CS/O2O0/T3C2_/A4
PA3/T2C4/O1O0/T3C1_/RX2/A3
PB3
PB0
PA7
PA6
PA5
PA4
PA3
PC15/CC2/T2C3_/T1ET_
VDD
PC0/TX2_/T2C4_/T1C1_/T2BK_/A10
PC3/T1C4_/T2C3N_/T2C1N_/C1N0/A13
PA0/T2C1/CTS2/C1P1/A0
PA1/RTS2/T2C2/C1O/O1N2/O2N2/A1
PA2/TX2/T2C3/O2O1/T2ET_/A2
GND
GND
PC15 CC2 VDD PC0 PC3 PA0 PA1 PA2
VCC
C1
0.1uF
GND
LED
P4
LED2 1
LED1 2
HEADER 2
3V3
R3
1K
LED2
LED2
D3
3V3
R6
1K
LED1
LED1
D4
PIN
P3
VBUS11
VBUS12
HEADER 2
P1
VBUS
VCC
PB3
PA7
PA5
PA3
PA1
PC3
PC15
GND
VCC
PB0
PA6
PA4
PA2
PA0
PC0
GND
Header 9X2
P2
VCC
GND
PC18
PC19
PB9
PB7
PB1
PC14
PB12
VCC
GND
PB11
PB4
PB10
PB8
PB6
PC17
PC16
Header 9X2
DOWNLOAD
VCC
R5
4.7K
S4
Download
PC17