SCHEMATIC INDEX (page 1)

CIRCUIT BOARD SCHEMATIC	REV	CIRCUIT DESCRIPTION	USED IN MODELS: 8610	310	110	202/203
MODEL 8610-C LAYOUT	C	AC WIRING AND TYPICAL LAYOUT OF 8610-C GAS CHROMATOGRAPH	☒	☐	☐	☐
MODEL 310 LAYOUT	B	AC WIRING AND TYPICAL LAYOUT OF 310 GAS CHROMATOGRAPH	☐	☒	☐	☐
AC DISTRIBUTION BD. 8610/310	C/A	DISTRIBUTES 110/220 AC VOLTAGE AND 28 VAC THROUGHOUT THE G.C.	☒	☒	☒	☐
8610 DISPLAY BD. (page 1)	G	EPC,TEMPERATURE & DETECTOR PARAMETER SETPOINT CIRCUITS	☒	☐	☐	☐
8610 DISPLAY BD. (page 2)	G	ALARM, CARRIER FILTER, AIR COMP., DISPLAY DRIVER	☒	☐	☐	☐
8610 DISPLAY BD. (page 3)	G	FID IGNITOR, VALVE ACTUATOR RELAYS, SPLIT VENT SOLENOID	☒	☐	☐	☐
310 DISPLAY BD. (page 1)	C	EPC,TEMPERATURE & DETECTOR PARAMETER SETPOINT CIRCUITS	☐	☒	☐	☐
310 DISPLAY BD. (page 2)	C	ALARM, CARRIER FILTER, AIR COMP., DISPLAY DRIVER	☐	☒	☐	☐
310 DISPLAY BD. (page 3)	C	FID IGNITOR, VALVE ACTUATOR RELAYS, SPLIT VENT SOLENOID	☐	☒	☐	☐
110 DISPLAY BD. (page 1)	B	EPC,TEMPERATURE & DETECTOR PARAMETER SETPOINT CIRCUITS	☐	☐	☒	☐
110 DISPLAY BD. (page 2)	B	FID IGNITOR, AIR COMP., DISPLAY DRIVER	☐	☐	☒	☐
EPC BOARD	D	ELECTRONIC GAS PRESSURE CONTROL	☒	☒	☒	☒
OVEN BOARD (page 1)	E	POWER SUPPLY, JITTER CIRCUIT, CHASSIS COOLING FAN CIRCUIT	☒	☒	☐	☐
OVEN BOARD (page 2)	E	COLUMN OVEN HEATING AND COOLING CIRCUITS	☒	☒	☐	☐
HEAT BOARD (page 1)	E	TEMPERATURE CONTROL OF HEATED ZONES. CIRCUIT 1.	☒	☒	☒	☐
HEAT BOARD (page 2)	E	TEMPERATURE CONTROL OF HEATED ZONES. CIRCUITS 2 & 3.	☒	☒	☒	☐
PURGE & TRAP BD. (page 1)	C	TRAP 1 HEATING CIRCUIT, TRAP COOLING	☒	☐	☐	☐
PURGE & TRAP BD. (page 2)	C	TRAP 2 HEATING CIRCUIT, SPARGE GAS SOLENOID	☒	☐	☐	☐
HIVOLT BOARD	B	HIGH VOLTAGE POWER SUPPLY FOR FPD AND PID DETECTORS	☒	☒	☒	☐
AMP BOARD (page 1)	D	AMPLIFIER BOARD POWER SUPPLIES	☒	☒	☒	☐
AMP BOARD (page 2)	D	TCD PROTECT CIRCUIT, POWER SUPPLY & AMPLIFIER	☒	☒	☒	☐
AMP BOARD (page 3)	D	ECD CIRCUITRY & AMPLIFIER	☒	☒	☒	☐
AMP BOARD (page 4)	D	DELCD POWER SUPPLY	☒	☒	☒	☐
AMP BOARD (page 5)	D	FID & DELCD AMPLIFIERS	☒	☒	☒	☐
AMP BOARD (page 6)	D	PID & FPD AMPLIFIERS	☒	☒	☒	☐
AMP BOARD (page 7)	D	OPTIONAL ZERO POTS AND ATTENUATORS FOR DETECTOR AMPLIFIERS	☒	☒	☒	☐
ACCESSORY RELAY BD.	A	A/D INTERFACE BOARD FOR AUTO-SAMPLERS	☒	☒	☐	☐
SPME BOARD (page 1)	A	SINGLE PHASE MICRO-EXTRACTION CONTROL CIRCUIT	☒	☒	☐	☐
SPME BOARD (page 2)	A	TEMPERATURE CONTROL OF HEATED ZONES. CIRCUITS 2 & 3	☒	☒	☐	☐

SCHEMATIC INDEX (page 2)

CIRCUIT BOARD SCHEMATIC	REV	CIRCUIT DESCRIPTION	USED IN MODEL. 8610	310	110	202/203
STUDENT HEAT BD. (page 1)	A	POWER SUPPLY, JITTER CIRCUIT, COLUMN OVEN HEATING CIRCUIT	☐	☒	☐	☐
STUDENT HEAT BD. (page 2)	A	TEMPERATURE CONTROL OF HEATED ZONE.	☐	☒	☐	☐
STUDENT HEAT BD. (page 3)	A	CHASSIS COOLING FAN CIRCUIT OPTIONAL RELAY CIRCUIT	☐	☒	☐	☐
EPC-HIVOLT BD. (page 1)	A	ELECTRONIC GAS PRESSURE CONTROL	☒	☒	☒	☐
EPC-HIVOLT BD. (page 2)	A	HIGH VOLTAGE POWER SUPPLY FOR FPD AND PID DETECTORS	☒	☒	☒	☐
MODEL 202/203 A/D BOARDS	N/A	LAYOUT OF MODEL 202/203 SERIAL DATA ACQUISITION BOARDS WITHIN THE G.C.	☒	☒	☐	☐
SERIAL DATA SYSTEM	N/A	A/D BOARD TROUBLE-SHOOTING, TESTING AND MAINTAINANCE	☒	☒	☐	☒
COMPONENT DATA SHEETS	N/A	AD597, OP-80, INA114, INA117, DIGITAL DISPLAY, LM324, PRESSURE SENSOR, ACTUATOR, HVPS	☒	☒	☒	☒
			☐	☐	☐	☐
			☐	☐	☐	☐
			☐	☐	☐	☐
			☐	☐	☐	☐
			☐	☐	☐	☐
			☐	☐	☐	☐
			☐	☐	☐	☐
			☐	☐	☐	☐
			☐	☐	☐	☐
			☐	☐	☐	☐
			☐	☐	☐	☐
			☐	☐	☐	☐
			☐	☐	☐	☐
			☐	☐	☐	☐
			☐	☐	☐	☐
			☐	☐	☐	☐
			☐	☐	☐	☐
			☐	☐	☐	☐
			☐	☐	☐	☐
			☐	☐	☐	☐

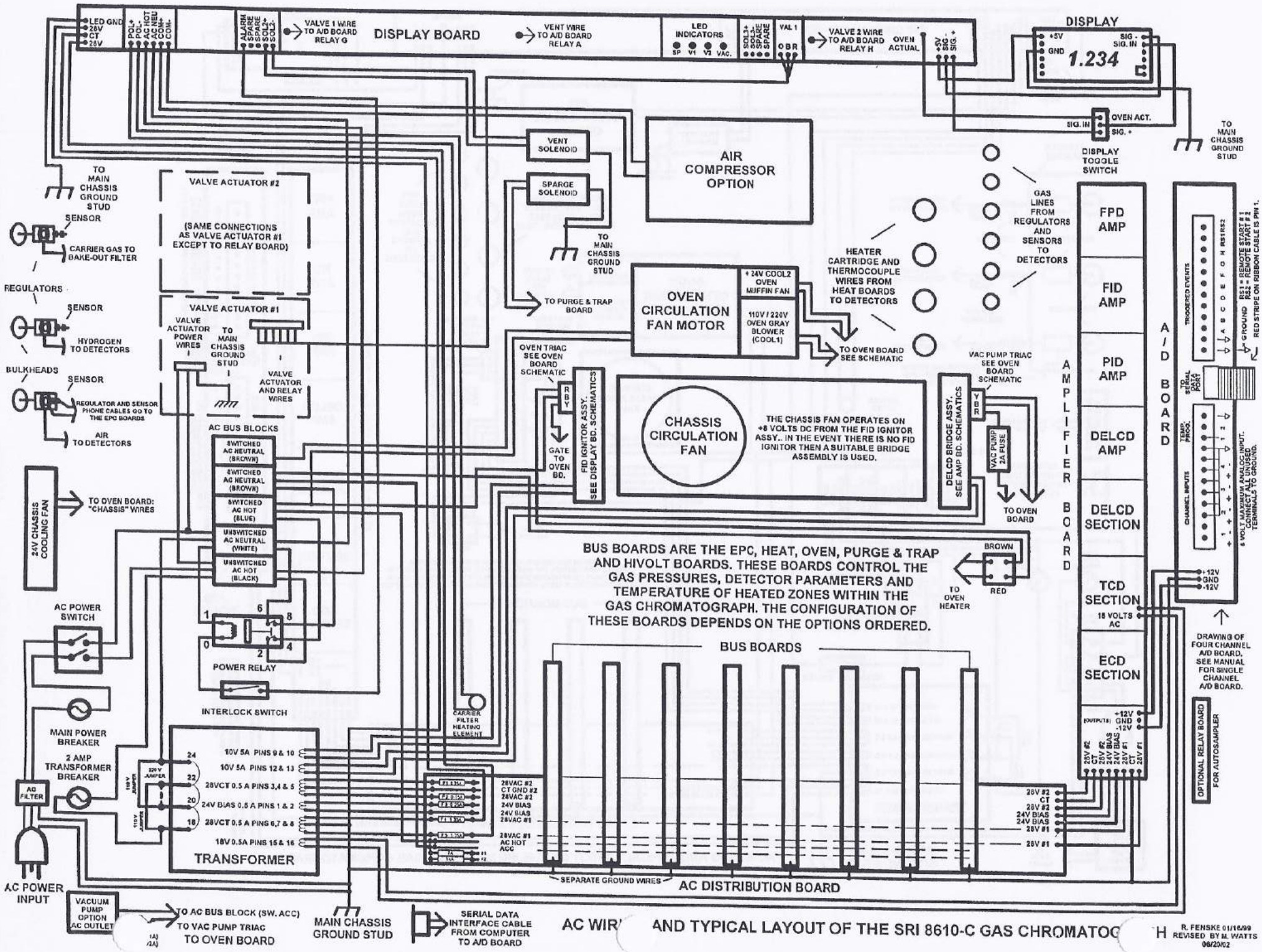
DISPLAY BOARD
LED GND
28V
CT
28V
POL+
POL-
AC HOT
COM-
COM+
COM-
ALARM
SPARE
SPARE
SOL2+
SOL2-
VALVE 1 WIRE TO A/D BOARD RELAY G
VENT WIRE TO A/D BOARD RELAY A
LED INDICATORS
SP
V1
V2
VAC.
SOL3+
SOL3-
SPARE
SPARE
VAL 1
O B R
VALVE 2 WIRE TO A/D BOARD RELAY H
OVEN ACTUAL
+5V
SIG.
SIG.
DISPLAY
+5V
GND
SIG -
SIG. IN
1.234
SIG. IN
OVEN ACT.
SIG. +
DISPLAY TOGGLE SWITCH
TO MAIN CHASSIS GROUND STUD
VENT SOLENOID
SPARGE SOLENOID
AIR COMPRESSOR OPTION
TO MAIN CHASSIS GROUND STUD
TO PURGE & TRAP BOARD
VALVE ACTUATOR #2
(SAME CONNECTIONS AS VALVE ACTUATOR #1 EXCEPT TO RELAY BOARD)
VALVE ACTUATOR #1
VALVE ACTUATOR POWER WIRES
TO MAIN CHASSIS GROUND STUD
VALVE ACTUATOR AND RELAY WIRES
TO MAIN CHASSIS GROUND STUD
SENSOR
CARRIER GAS TO BAKE-OUT FILTER
REGULATORS
SENSOR
HYDROGEN TO DETECTORS
BULKHEADS
SENSOR
REGULATOR AND SENSOR PHONE CABLES GO TO THE EPC BOARDS
AIR TO DETECTORS
OVEN CIRCULATION FAN MOTOR
+ 24V COOL2 OVEN MUFFIN FAN
110V / 220V OVEN GRAY BLOWER (COOL1)
TO OVEN BOARD SEE SCHEMATIC
HEATER CARTRIDGE AND THERMOCOUPLE WIRES FROM HEAT BOARDS TO DETECTORS
GAS LINES FROM REGULATORS AND SENSORS TO DETECTORS
OVEN TRIAC SEE OVEN BOARD SCHEMATIC
R B Y
GATE TO OVEN BD.
FID IGNITOR ASSY. SEE DISPLAY BD. SCHEMATICS
CHASSIS CIRCULATION FAN
THE CHASSIS FAN OPERATES ON +8 VOLTS DC FROM THE FID IGNITOR ASSY.. IN THE EVENT THERE IS NO FID IGNITOR THEN A SUITABLE BRIDGE ASSEMBLY IS USED.
DELCD BRIDGE ASSY. SEE AMP BD. SCHEMATICS
VAC PUMP TRIAC SEE OVEN BOARD SCHEMATIC
Y B R
VAC PUMP 2A FUSE
TO OVEN BOARD
AMPLIFIER BOARD
FPD AMP
FID AMP
PID AMP
DELCD AMP
DELCD SECTION
TCD SECTION
18 VOLTS AC
ECD SECTION
+12V
GND
-12V
(OUTPUTS)
28V #2
CT
28V #2
24V BIAS
24V BIAS
28V #1
CT
28V #1
A/D BOARD
TRIGGERED EVENTS
A B C D E F G H RS1 RS2
GROUND
RS1 = REMOTE START #1
RS2 = REMOTE START #2
RED STRIPE ON RIBBON CABLE IS PIN 1.
TO SERIAL DATA PORT
TEMP. PROG.
CHANNEL INPUTS
8 VOLT MAXIMUM ANALOG INPUT. CONNECT ALL UNUSED TERMINALS TO GROUND.
+12V
GND
-12V
DRAWING OF FOUR CHANNEL A/D BOARD. SEE MANUAL FOR SINGLE CHANNEL A/D BOARD.
OPTIONAL RELAY BOARD FOR AUTOSAMPLER
24V CHASSIS COOLING FAN
TO OVEN BOARD: "CHASSIS" WIRES
AC BUS BLOCKS
SWITCHED AC NEUTRAL (BROWN)
SWITCHED AC NEUTRAL (BROWN)
SWITCHED AC HOT (BLUE)
UNSWITCHED AC NEUTRAL (WHITE)
UNSWITCHED AC HOT (BLACK)
BUS BOARDS ARE THE EPC, HEAT, OVEN, PURGE & TRAP AND HIVOLT BOARDS. THESE BOARDS CONTROL THE GAS PRESSURES, DETECTOR PARAMETERS AND TEMPERATURE OF HEATED ZONES WITHIN THE GAS CHROMATOGRAPH. THE CONFIGURATION OF THESE BOARDS DEPENDS ON THE OPTIONS ORDERED.
BROWN
RED
TO OVEN HEATER
AC POWER SWITCH
1
6
8
0
2
4
POWER RELAY
INTERLOCK SWITCH
CARRIER FILTER HEATING ELEMENT
BUS BOARDS
MAIN POWER BREAKER
2 AMP TRANSFORMER BREAKER
AC FILTER
24
22
20
18
220 V JUMPER
110 V JUMPER
10V 5A PINS 9 & 10
10V 5A PINS 12 & 13
28VCT 0.5 A PINS 3,4 & 5
24V BIAS 0.5 A PINS 1 & 2
28VCT 0.5 A PINS 6,7 & 8
18V 0.5A PINS 15 & 16
TRANSFORMER
F1 1.25A
F2 0.15A
F3 0.25A
F4 1.25A
F5 1.25A
7A
7A
#1
#2
28VAC #2
CT GND #2
28VAC #2
24V BIAS
24V BIAS
28VAC #1
28VAC #1
AC HOT
ACC
28V #2
CT
28V #2
24V BIAS
24V BIAS
28V #1
28V #1
SEPARATE GROUND WIRES
AC DISTRIBUTION BOARD
AC POWER INPUT
VACUUM PUMP OPTION AC OUTLET
TO AC BUS BLOCK (SW. ACC)
TO VAC PUMP TRIAC
TO OVEN BOARD
MAIN CHASSIS GROUND STUD
SERIAL DATA INTERFACE CABLE FROM COMPUTER TO A/D BOARD
AC WIR AND TYPICAL LAYOUT OF THE SRI 8610-C GAS CHROMATOG H
R. FENSKE 01/16/99
REVISED BY H. WATTS
06/20/02

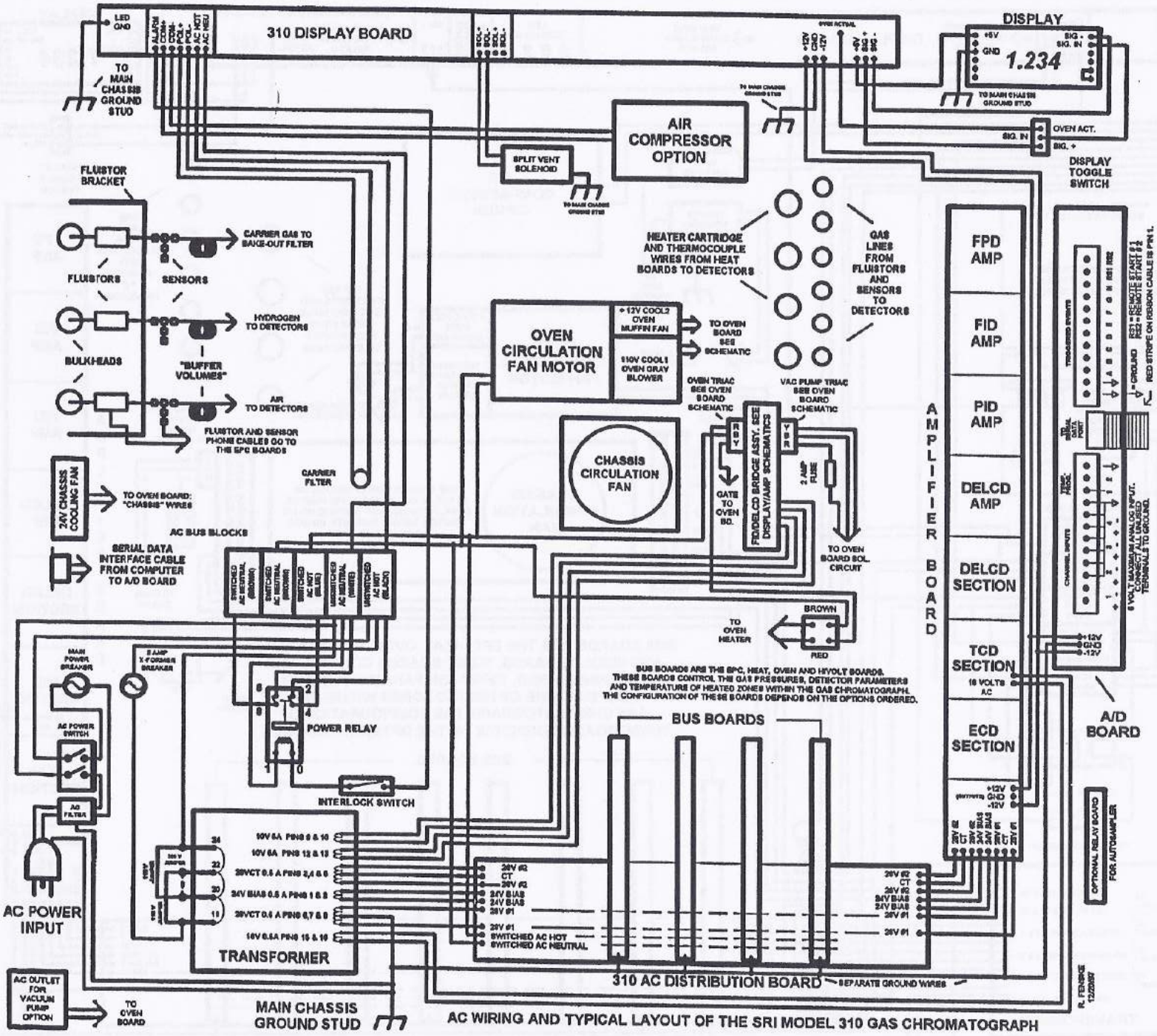

AC WIRING AND TYPICAL LAYOUT OF THE SRI MODEL 310 GAS CHROMATOGRAPH

8610 AC DISTRIBUTION BOARD

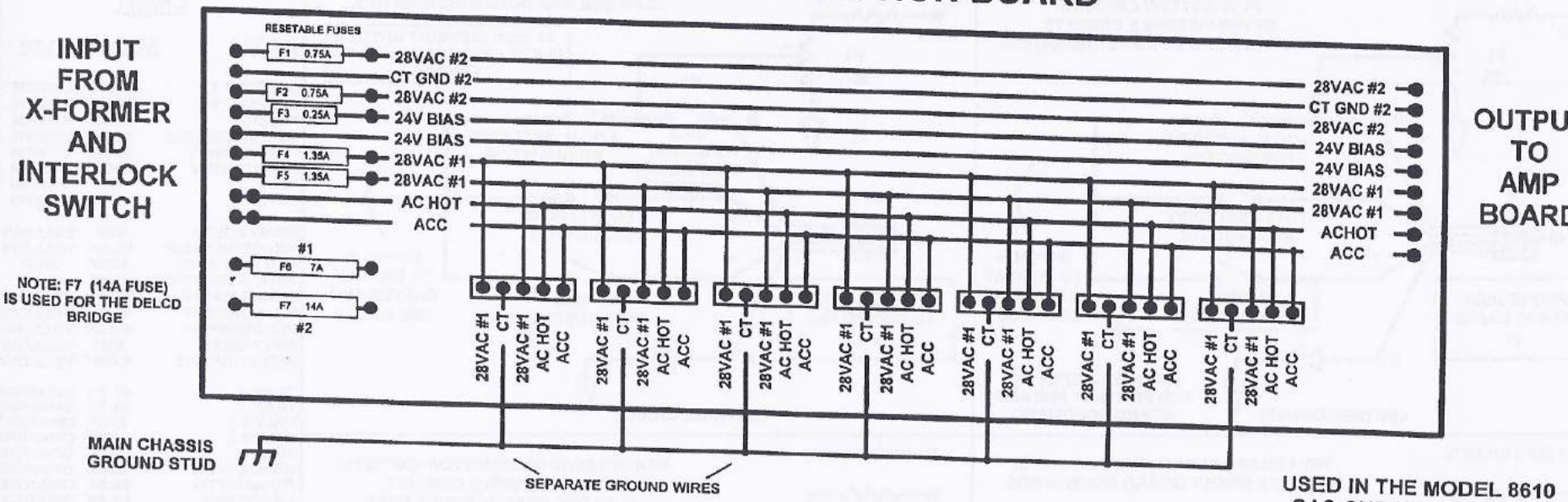

USED IN THE MODEL 8610 GAS CHROMATOGRAPH

310 AC DISTRIBUTION BOARD

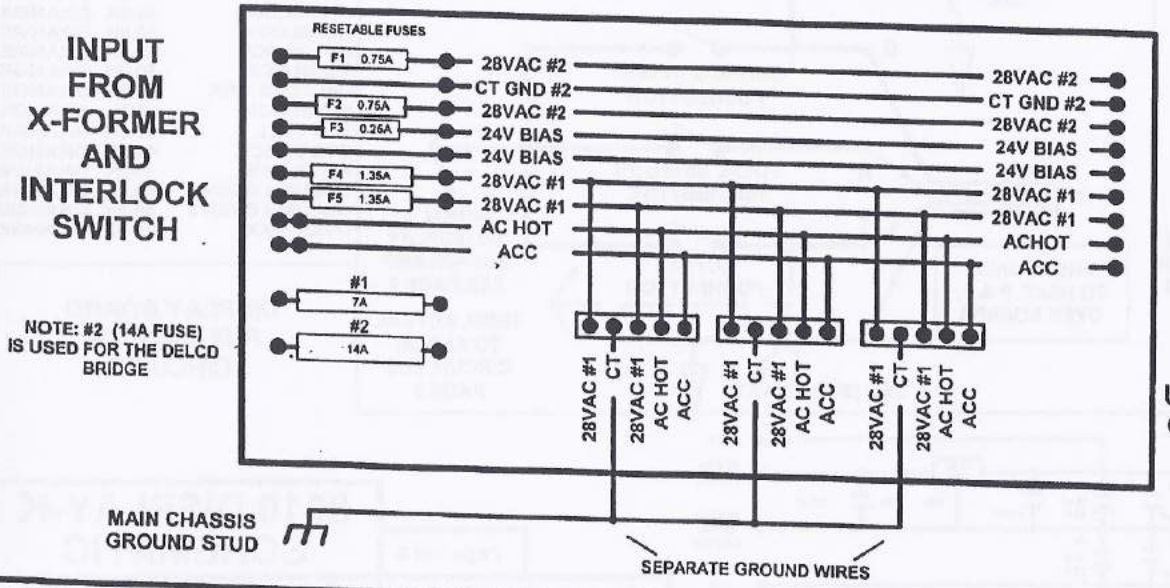

USED IN THE MODEL 310 GAS CHROMATOGRAPH

Page 1 of 1	Bd. REV. 8610 - D 310 - B	AC DISTRIBUTION SCHEMATIC	
Filename: ACDIST-ca.tcw	Date: 12/20/97 REV. Date: 5/13/02	By: R. Fenske By: M. Watts	

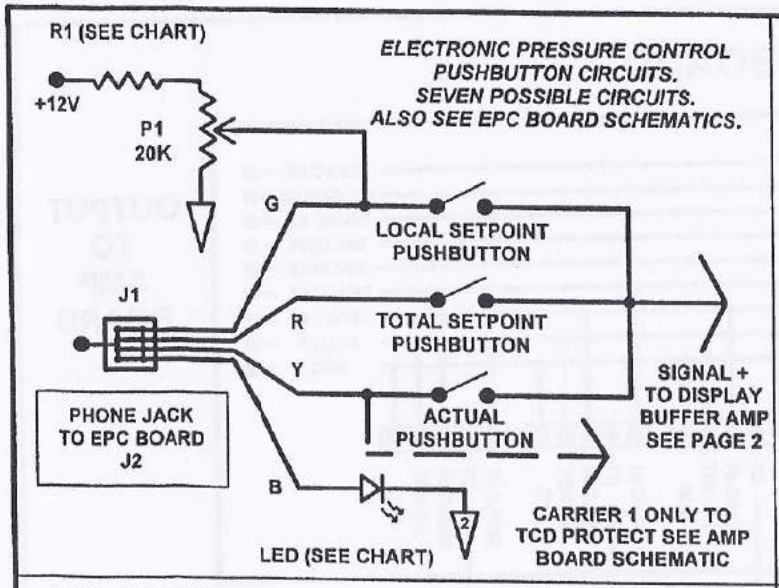

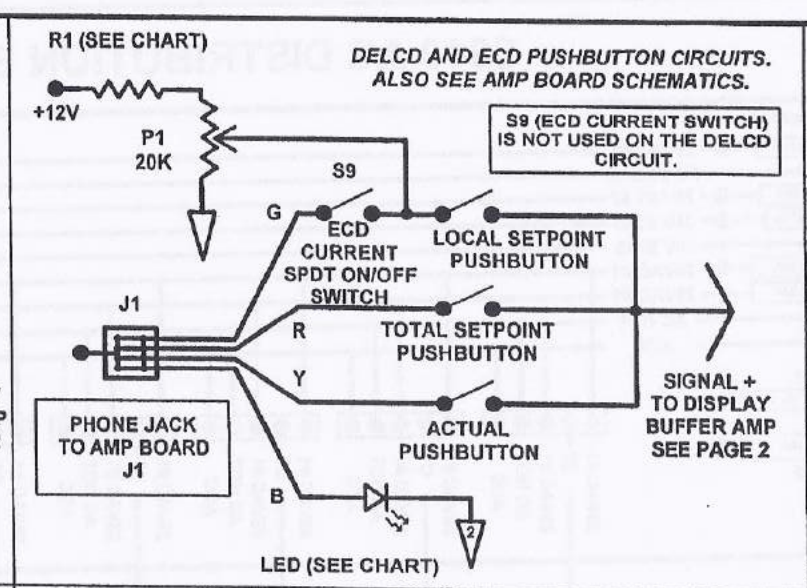

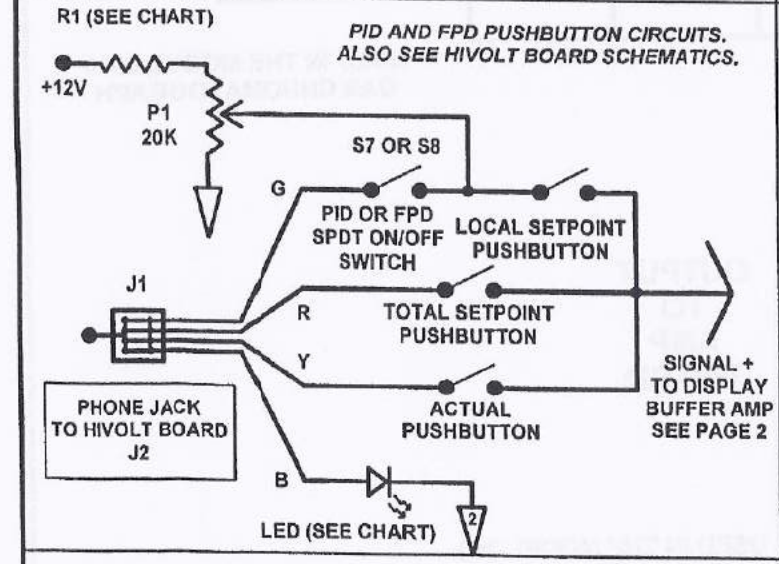

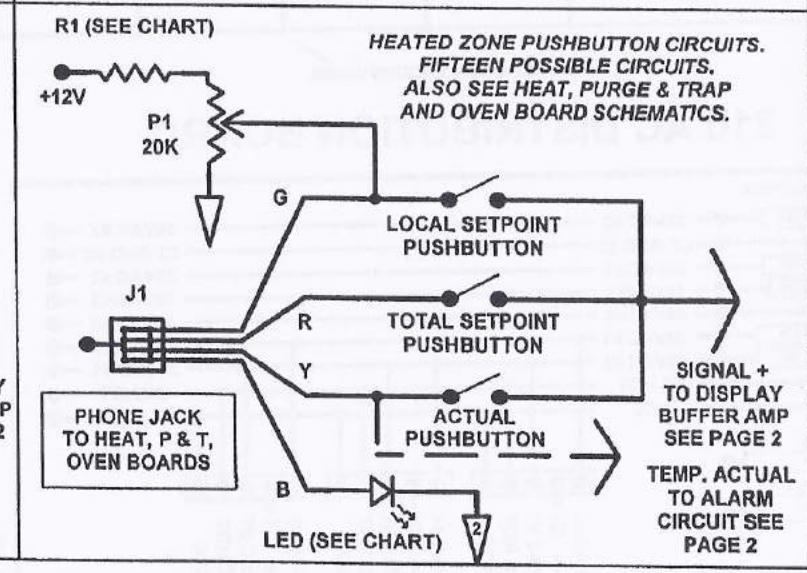

CHART

CIRCUIT	R1 VALUE	LED
CARRIER 1	220K	GREEN
CARRIER 2	220K	GREEN
PURGE	2.2M	GREEN
VIAL PRESSURE	220K	GREEN
HYDROGEN 1	220K	GREEN
HYDROGEN 2	220K	GREEN
AIR 1	1M	GREEN
AIR 2	1M	GREEN
BEAD VOLTS	620	YELLOW
REACTOR TEMP	60.4K	YELLOW
TCD PROTECT	453K	RED
VIRT. OVEN PROT.	390K	RED
FLAME IGNITE	100 ohm	YELLOW
PID CURRENT	40.2K	YELLOW
HID CURRENT	4.02K	YELLOW
PMT VOLTS	20K	YELLOW
ECD CURRENT	4.02K	YELLOW
TRAP 1	47.7K	ORANGE
TRAP 2	48.7K	ORANGE
VALVE 1	100K	ORANGE
VALVE 2	100K	ORANGE
VIAL	453K	ORANGE
HEADSPACE	220K	ORANGE
FID w/ METH.	38.3K	ORANGE
DESORBER	60.4K	ORANGE
INJECTOR 1	48.7K	ORANGE
INJECTOR 2	48.7K	ORANGE
FID BLOCK	40.2K	ORANGE
NPD BLOCK	40.2K	ORANGE
HID BLOCK	40.2K	ORANGE
FPD BLOCK	40.2K	ORANGE
TID BLOCK	40.2K	ORANGE
DELCD BLOCK	40.2K	ORANGE
PID BLOCK	76K	ORANGE
TCD CELL	60.4K	ORANGE
ECD BLOCK	44.2K	ORANGE
X-FER LINE	100K	ORANGE
COLUMN OVEN 1	40.2K	ORANGE
COLUMN OVEN 2	40.2K	ORANGE
OVEN MAX	38.3K	ORANGE

DISPLAY BOARD PUSHBUTTON CIRCUITS

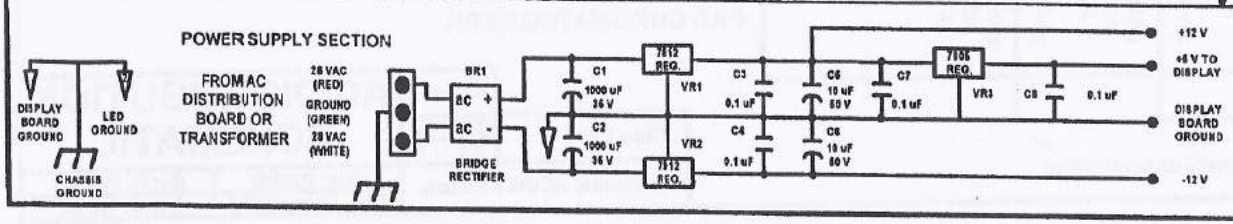

Page 1 of 5

8610 DISPLAY-K SCHEMATIC

Filename: display-k1.tcw

Date: 12/20/97	By: R. Fenske
Rev. Date:10/18/02	By: M. Watts

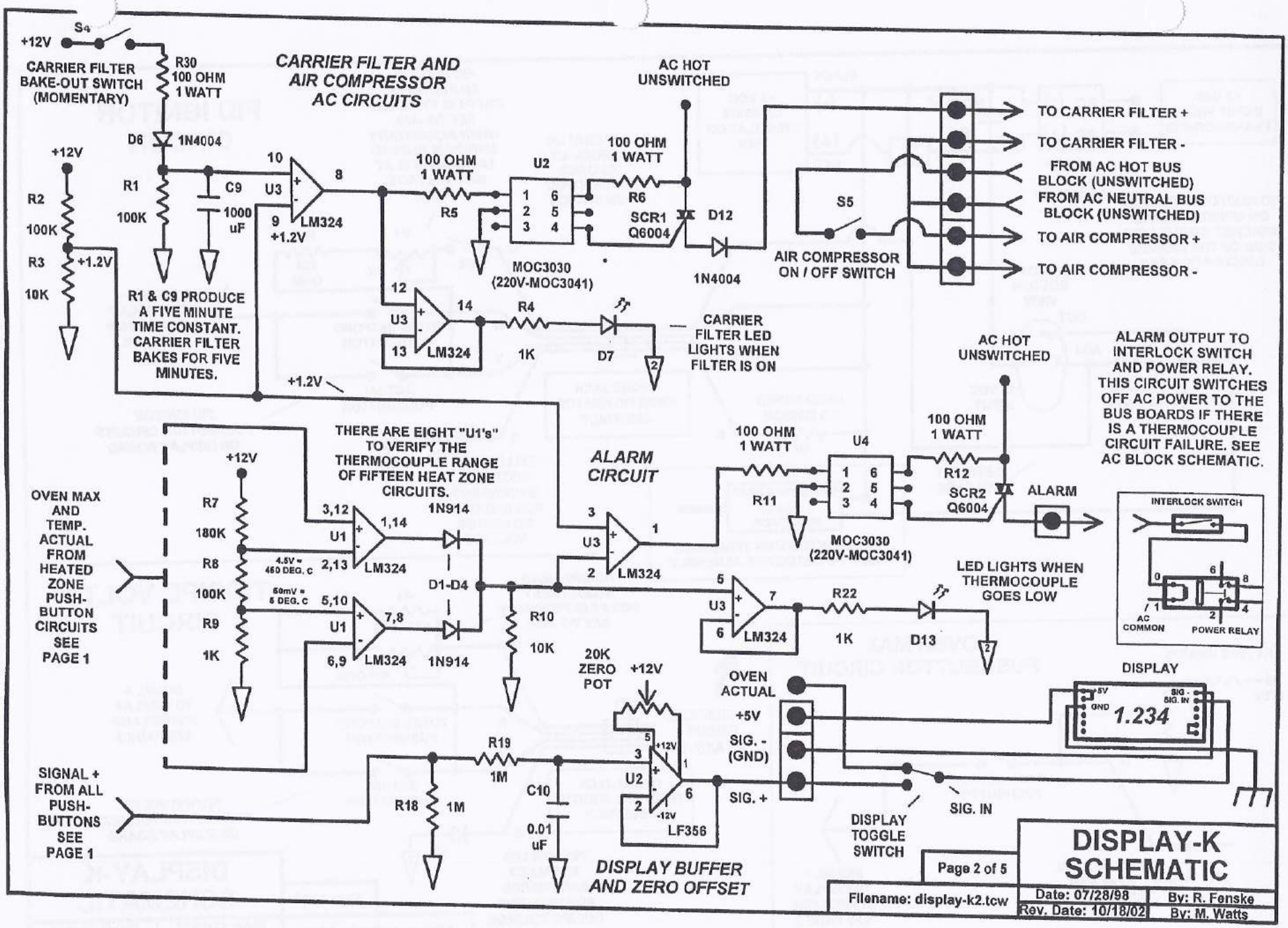
CARRIER FILTER AND AIR COMPRESSOR AC CIRCUITS
+12V
S4
CARRIER FILTER BAKE-OUT SWITCH (MOMENTARY)
R30 100 OHM 1 WATT
D6 1N4004
R1 100K
C9 1000 uF
R1 & C9 PRODUCE A FIVE MINUTE TIME CONSTANT. CARRIER FILTER BAKES FOR FIVE MINUTES.
R2 100K
R3 10K
+1.2V
U3 LM324
100 OHM 1 WATT
R5
U2
MOC3030 (220V-MOC3041)
R6
SCR1 Q6004
D12
1N4004
AC HOT UNSWITCHED
S5
AIR COMPRESSOR ON / OFF SWITCH
TO CARRIER FILTER +
TO CARRIER FILTER -
FROM AC HOT BUS BLOCK (UNSWITCHED)
FROM AC NEUTRAL BUS BLOCK (UNSWITCHED)
TO AIR COMPRESSOR +
TO AIR COMPRESSOR -
R4 1K
D7
CARRIER FILTER LED LIGHTS WHEN FILTER IS ON
THERE ARE EIGHT "U1's" TO VERIFY THE THERMOCOUPLE RANGE OF FIFTEEN HEAT ZONE CIRCUITS.
OVEN MAX AND TEMP. ACTUAL FROM HEATED ZONE PUSH-BUTTON CIRCUITS SEE PAGE 1
R7 180K
R8 100K
R9 1K
4.5V = 450 DEG. C
50mV = 5 DEG. C
U1 LM324
1N914
D1-D4
R10 10K
ALARM CIRCUIT
U3 LM324
100 OHM 1 WATT
R11
U4
MOC3030 (220V-MOC3041)
R12
SCR2 Q6004
ALARM
ALARM OUTPUT TO INTERLOCK SWITCH AND POWER RELAY. THIS CIRCUIT SWITCHES OFF AC POWER TO THE BUS BOARDS IF THERE IS A THERMOCOUPLE CIRCUIT FAILURE. SEE AC BLOCK SCHEMATIC.
INTERLOCK SWITCH
AC COMMON
POWER RELAY
R22 1K
D13
LED LIGHTS WHEN THERMOCOUPLE GOES LOW
20K ZERO POT
U2 LF356
R19 1M
R18 1M
C10 0.01 uF
SIGNAL + FROM ALL PUSH-BUTTONS SEE PAGE 1
OVEN ACTUAL
+5V
SIG. - (GND)
SIG. +
DISPLAY
1.234
SIG. IN
DISPLAY TOGGLE SWITCH
DISPLAY BUFFER AND ZERO OFFSET
Page 2 of 5
DISPLAY-K SCHEMATIC
Filename: display-k2.tcw
Date: 07/28/98
Rev. Date: 10/18/02
By: R. Fenske
By: M. Watts

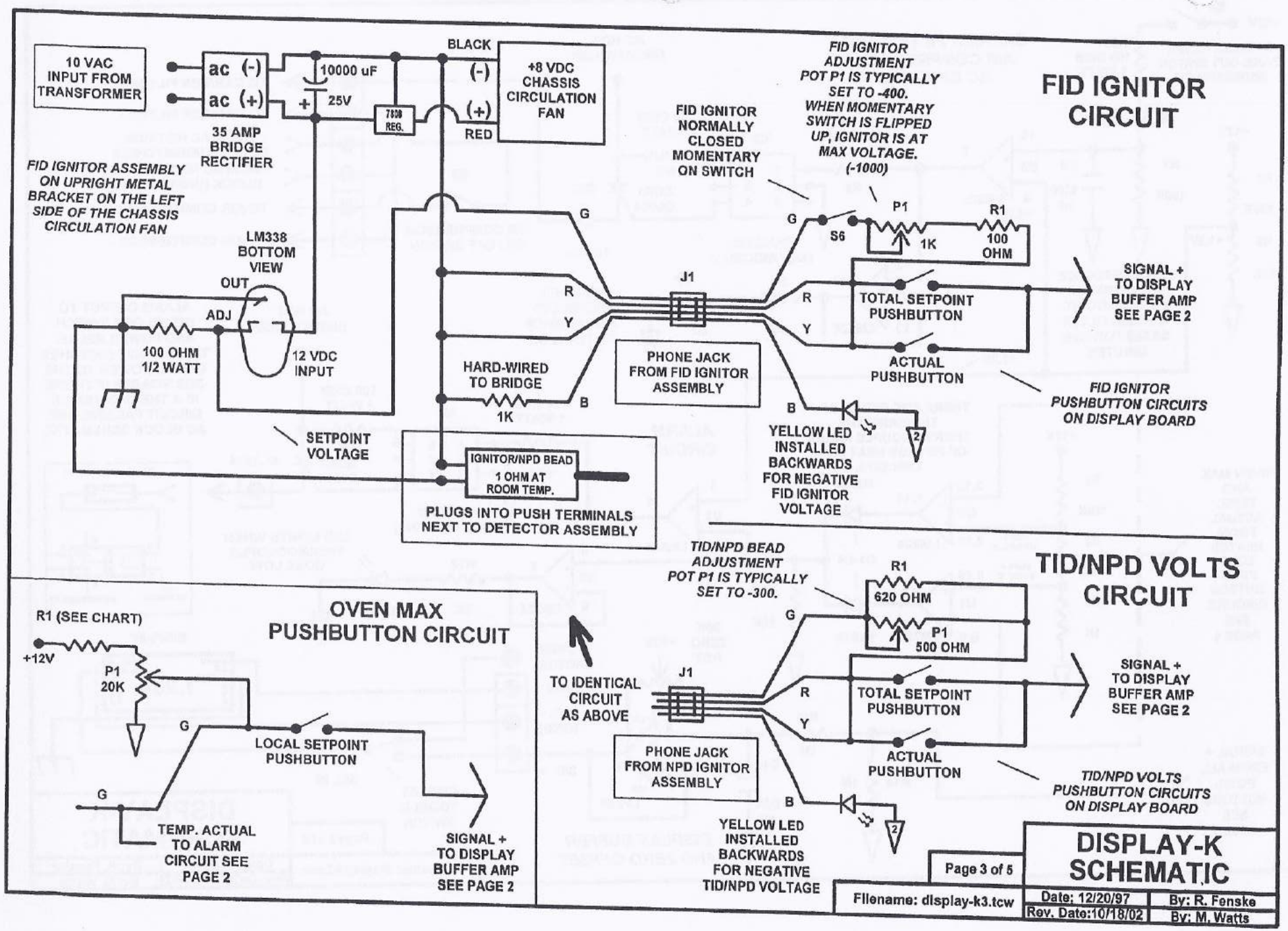
FID IGNITOR CIRCUIT
10 VAC INPUT FROM TRANSFORMER
ac (-)
ac (+)
35 AMP BRIDGE RECTIFIER
10000 uF
25V
7808 REG.
BLACK
(-)
(+)
RED
+8 VDC CHASSIS CIRCULATION FAN
FID IGNITOR ASSEMBLY ON UPRIGHT METAL BRACKET ON THE LEFT SIDE OF THE CHASSIS CIRCULATION FAN
LM338 BOTTOM VIEW
OUT
ADJ
100 OHM 1/2 WATT
12 VDC INPUT
SETPOINT VOLTAGE
G
R
Y
B
HARD-WIRED TO BRIDGE
1K
IGNITOR/NPD BEAD
1 OHM AT ROOM TEMP.
PLUGS INTO PUSH TERMINALS NEXT TO DETECTOR ASSEMBLY
J1
PHONE JACK FROM FID IGNITOR ASSEMBLY
FID IGNITOR NORMALLY CLOSED MOMENTARY ON SWITCH
FID IGNITOR ADJUSTMENT POT P1 IS TYPICALLY SET TO -400. WHEN MOMENTARY SWITCH IS FLIPPED UP, IGNITOR IS AT MAX VOLTAGE. (-1000)
S6
P1
1K
R1
100 OHM
TOTAL SETPOINT PUSHBUTTON
ACTUAL PUSHBUTTON
SIGNAL + TO DISPLAY BUFFER AMP SEE PAGE 2
FID IGNITOR PUSHBUTTON CIRCUITS ON DISPLAY BOARD
YELLOW LED INSTALLED BACKWARDS FOR NEGATIVE FID IGNITOR VOLTAGE
TID/NPD VOLTS CIRCUIT
TID/NPD BEAD ADJUSTMENT POT P1 IS TYPICALLY SET TO -300.
R1
620 OHM
P1
500 OHM
TO IDENTICAL CIRCUIT AS ABOVE
PHONE JACK FROM NPD IGNITOR ASSEMBLY
TOTAL SETPOINT PUSHBUTTON
ACTUAL PUSHBUTTON
SIGNAL + TO DISPLAY BUFFER AMP SEE PAGE 2
TID/NPD VOLTS PUSHBUTTON CIRCUITS ON DISPLAY BOARD
YELLOW LED INSTALLED BACKWARDS FOR NEGATIVE TID/NPD VOLTAGE
OVEN MAX PUSHBUTTON CIRCUIT
R1 (SEE CHART)
+12V
P1
20K
LOCAL SETPOINT PUSHBUTTON
TEMP. ACTUAL TO ALARM CIRCUIT SEE PAGE 2
SIGNAL + TO DISPLAY BUFFER AMP SEE PAGE 2
Page 3 of 5
DISPLAY-K SCHEMATIC
Filename: display-k3.tcw
Date: 12/20/97
By: R. Fenske
Rev. Date:10/18/02
By: M. Watts

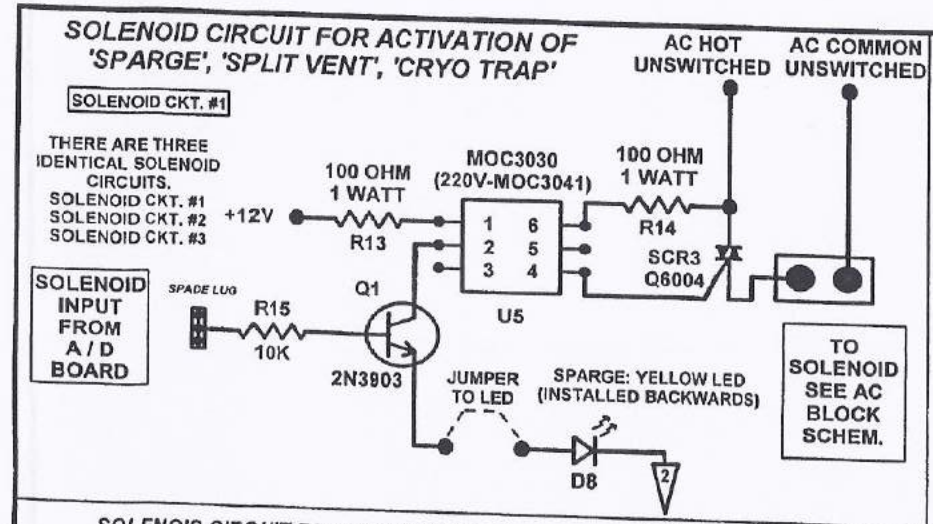

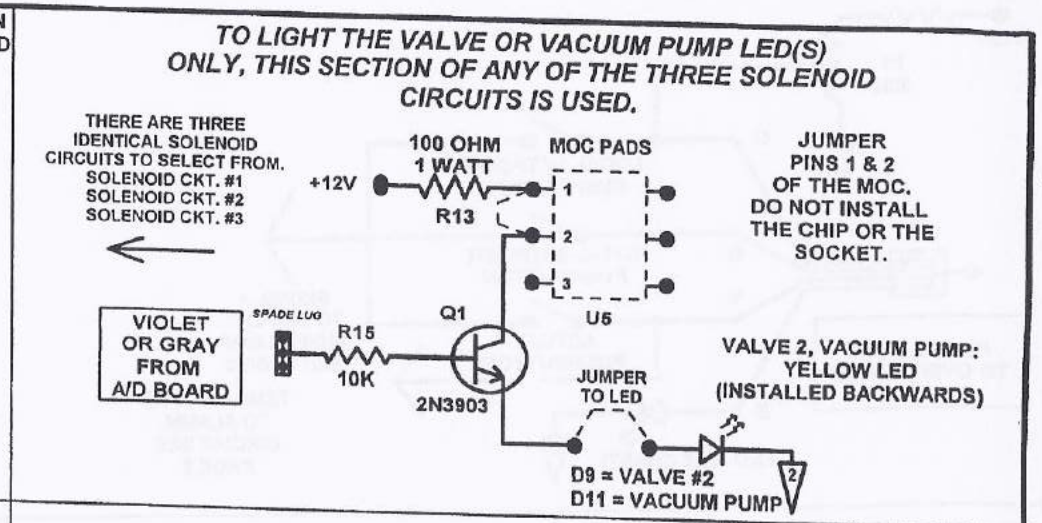

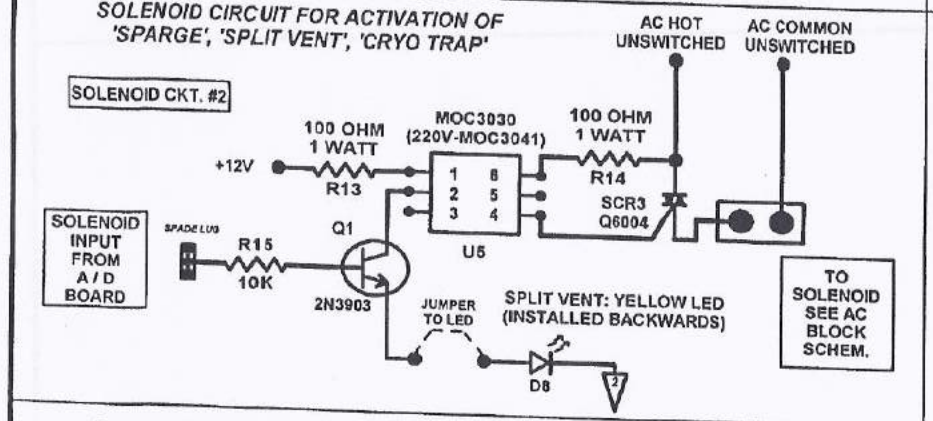

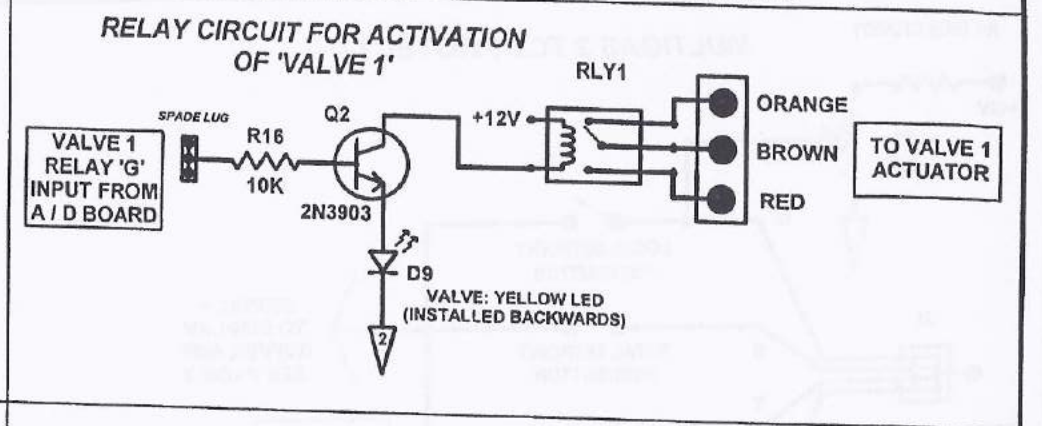

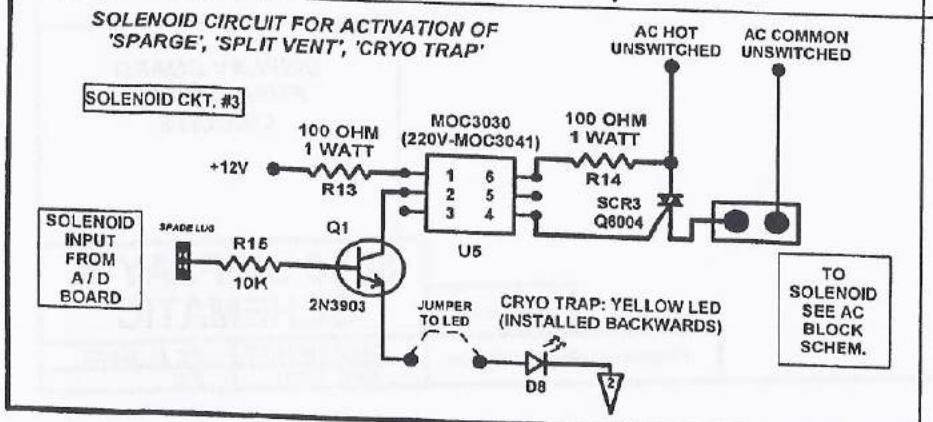

Page 4 of 5	**DISPLAY-K SCHEMATIC**	
Filename: display-k4.tcw	Date: 12/20/97	By: R. Fenske
	Rev. Date:10/18/02	By: M. Watts

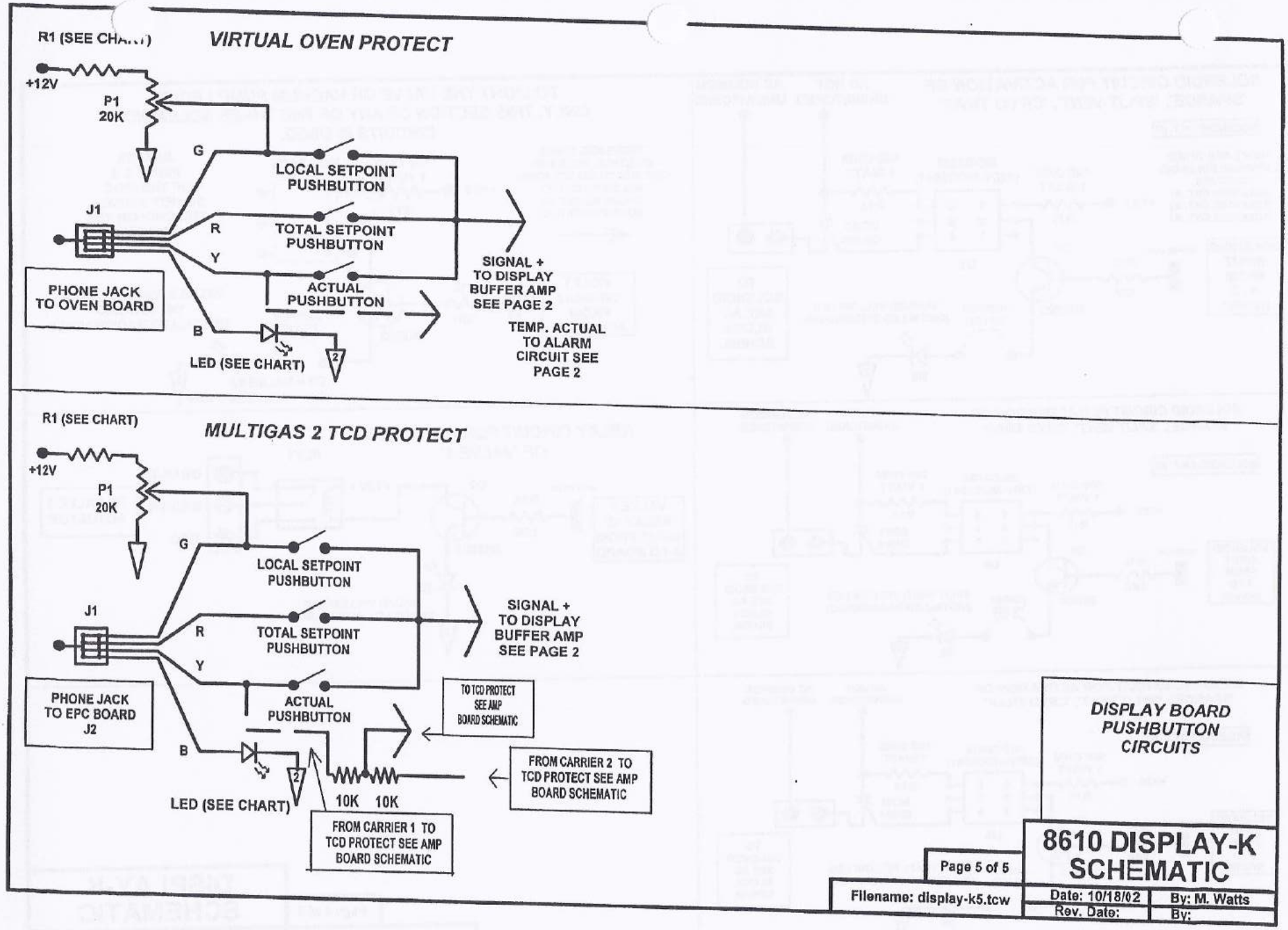
R1 (SEE CHART)
VIRTUAL OVEN PROTECT
+12V
P1
20K
G
LOCAL SETPOINT
PUSHBUTTON
J1
R
TOTAL SETPOINT
PUSHBUTTON
Y
SIGNAL +
TO DISPLAY
BUFFER AMP
SEE PAGE 2
PHONE JACK
TO OVEN BOARD
ACTUAL
PUSHBUTTON
B
TEMP. ACTUAL
TO ALARM
CIRCUIT SEE
PAGE 2
LED (SEE CHART)
2
R1 (SEE CHART)
MULTIGAS 2 TCD PROTECT
+12V
P1
20K
G
LOCAL SETPOINT
PUSHBUTTON
J1
R
TOTAL SETPOINT
PUSHBUTTON
SIGNAL +
TO DISPLAY
BUFFER AMP
SEE PAGE 2
Y
PHONE JACK
TO EPC BOARD
J2
ACTUAL
PUSHBUTTON
TO TCD PROTECT
SEE AMP
BOARD SCHEMATIC
B
FROM CARRIER 2 TO
TCD PROTECT SEE AMP
BOARD SCHEMATIC
2
10K
10K
LED (SEE CHART)
FROM CARRIER 1 TO
TCD PROTECT SEE AMP
BOARD SCHEMATIC
DISPLAY BOARD
PUSHBUTTON
CIRCUITS
Page 5 of 5
8610 DISPLAY-K
SCHEMATIC
Filename: display-k5.tcw
Date: 10/18/02
By: M. Watts
Rev. Date:
By:

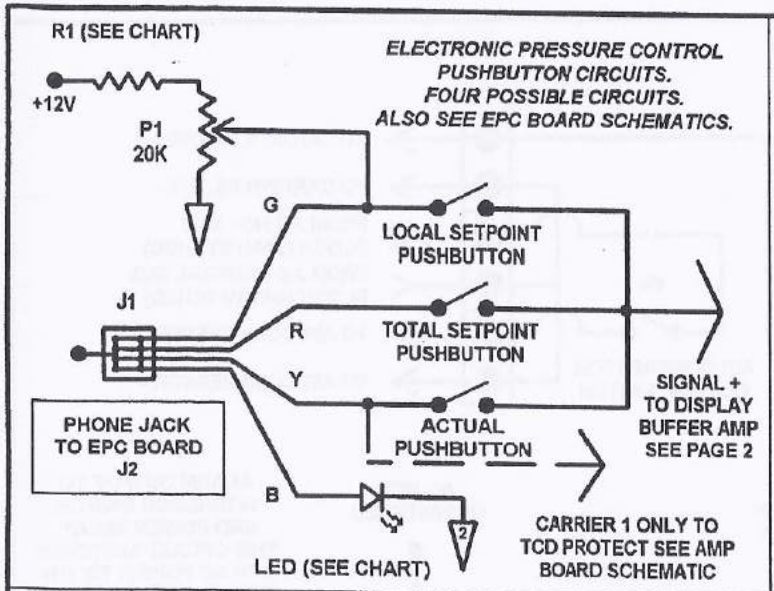

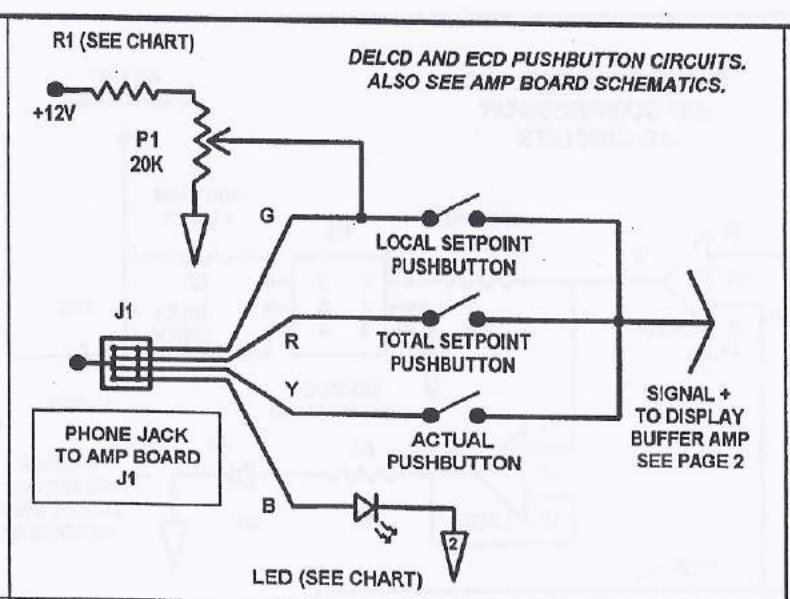

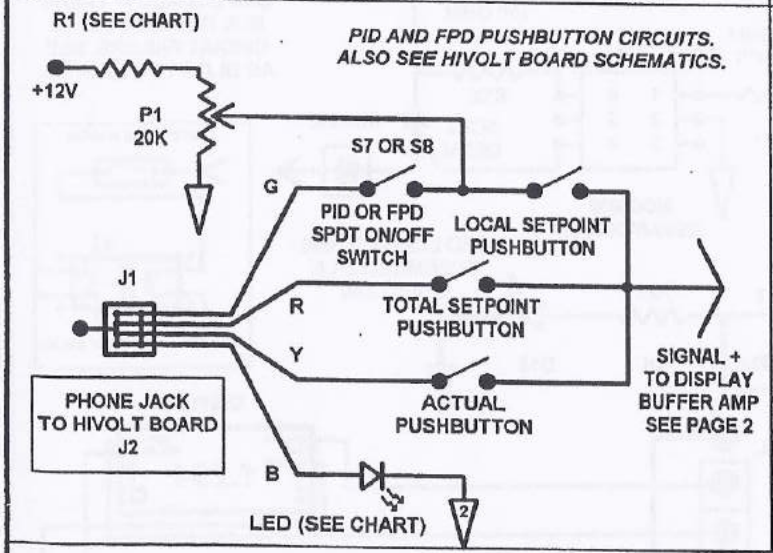

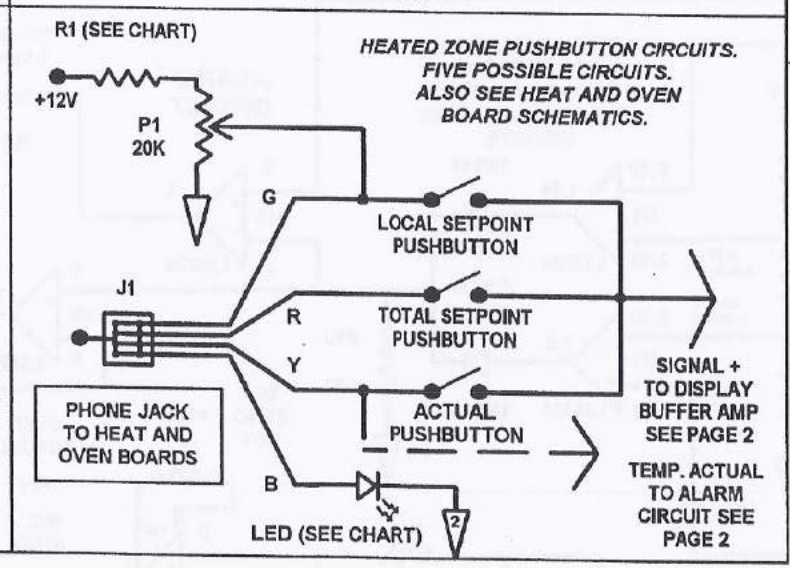

CHART

CIRCUIT	R1 VALUE	LED
CARRIER 1	220K	GREEN
HYDROGEN 1	220K	GREEN
AIR 1	1M	GREEN
AUXILIARY	220K	GREEN
TCD PROTECT	453K	RED
FID IGNITOR	100	YELLOW
PID CURRENT	40.2K	YELLOW
FPD VOLTS	20K	YELLOW
ECD CURRENT	4.02K	YELLOW
DELCD REACT.	60.4K	YELLOW
HEATED INJ. 1	60.4K	ORANGE
FID BLOCK	40.2K	ORANGE
DELCD BLOCK	40.2K	ORANGE
PID BLOCK	75K	ORANGE
ECD BLOCK	44.2K	ORANGE
TCD BLOCK	120K	ORANGE
COL. OVEN 1	40.2K	ORANGE
CHASSIS	383K	GREEN

DISPLAY BOARD PUSHBUTTON CIRCUITS

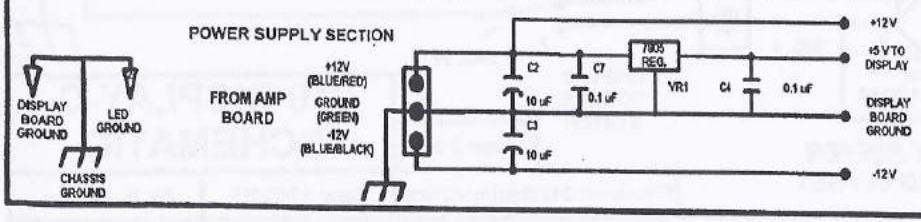

THE LM324's ON THIS BOARD OPERATE USING +12V ON PIN 4 AND GROUND ON PIN 11.

Page 1 of 3

310 DISPLAY-C SCHEMATIC

Filename: 310display-c1.tcw | Date: 12/20/97 | By: R. Fenske

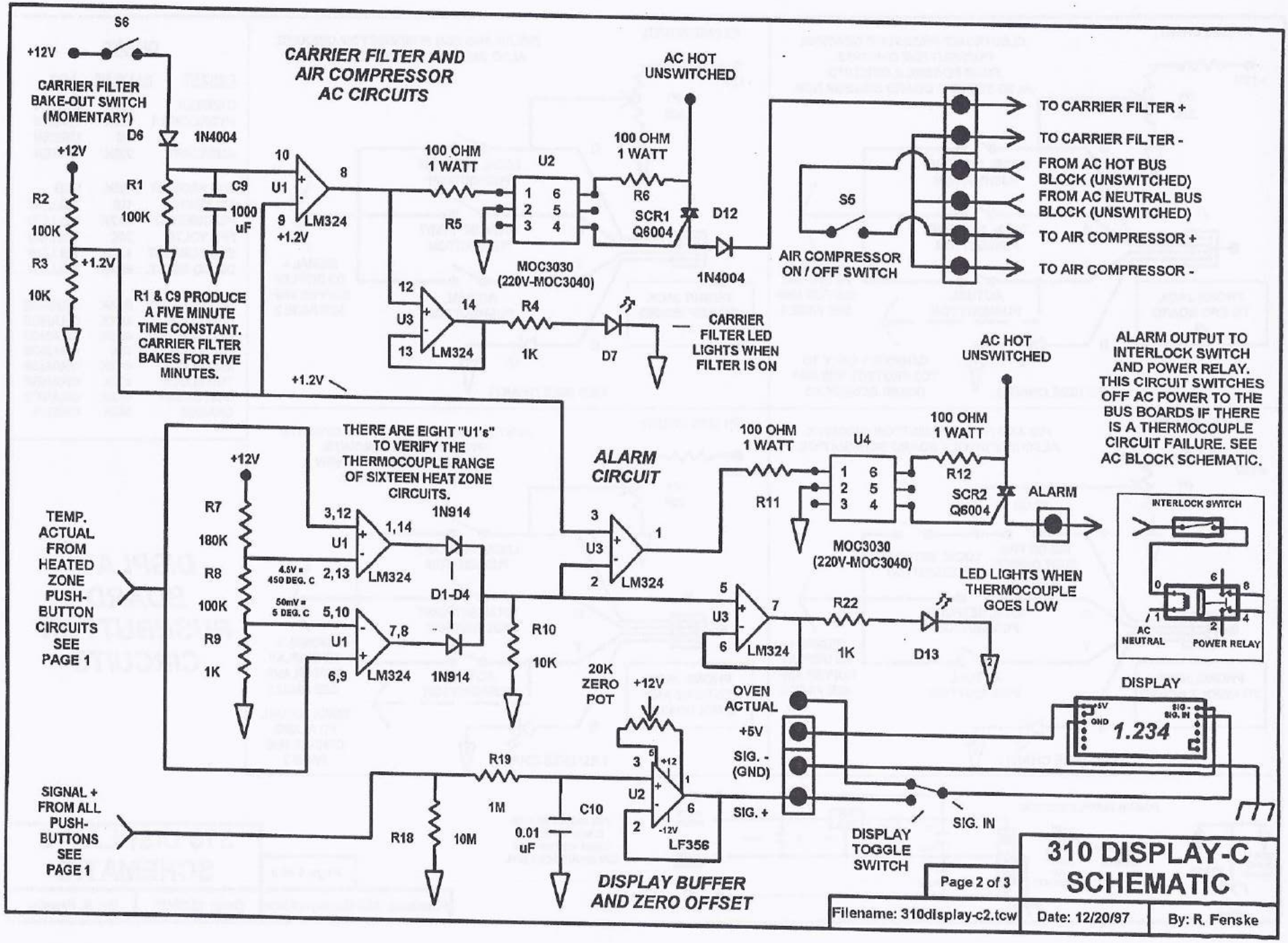
CARRIER FILTER AND AIR COMPRESSOR AC CIRCUITS
S6
+12V
CARRIER FILTER BAKE-OUT SWITCH (MOMENTARY)
D6
1N4004
R1
100K
C9
1000 uF
R1 & C9 PRODUCE A FIVE MINUTE TIME CONSTANT. CARRIER FILTER BAKES FOR FIVE MINUTES.
R2
100K
R3
10K
+1.2V
U1
LM324
100 OHM 1 WATT
R5
U2
MOC3030 (220V-MOC3040)
AC HOT UNSWITCHED
100 OHM 1 WATT
R6
SCR1 Q6004
D12
1N4004
U3
LM324
R4
1K
D7
CARRIER FILTER LED LIGHTS WHEN FILTER IS ON
S5
AIR COMPRESSOR ON / OFF SWITCH
TO CARRIER FILTER +
TO CARRIER FILTER -
FROM AC HOT BUS BLOCK (UNSWITCHED)
FROM AC NEUTRAL BUS BLOCK (UNSWITCHED)
TO AIR COMPRESSOR +
TO AIR COMPRESSOR -
ALARM OUTPUT TO INTERLOCK SWITCH AND POWER RELAY. THIS CIRCUIT SWITCHES OFF AC POWER TO THE BUS BOARDS IF THERE IS A THERMOCOUPLE CIRCUIT FAILURE. SEE AC BLOCK SCHEMATIC.
THERE ARE EIGHT "U1's" TO VERIFY THE THERMOCOUPLE RANGE OF SIXTEEN HEAT ZONE CIRCUITS.
TEMP. ACTUAL FROM HEATED ZONE PUSH-BUTTON CIRCUITS SEE PAGE 1
R7
180K
R8
100K
R9
1K
4.5V = 450 DEG. C
50mV = 5 DEG. C
1N914
D1-D4
R10
10K
ALARM CIRCUIT
100 OHM 1 WATT
R11
U4
MOC3030 (220V-MOC3040)
100 OHM 1 WATT
R12
SCR2 Q6004
ALARM
AC HOT UNSWITCHED
INTERLOCK SWITCH
AC NEUTRAL
POWER RELAY
R22
1K
D13
LED LIGHTS WHEN THERMOCOUPLE GOES LOW
DISPLAY
1.234
20K ZERO POT
OVEN ACTUAL
+5V
SIG. - (GND)
SIG. +
SIG. IN
DISPLAY TOGGLE SWITCH
SIGNAL + FROM ALL PUSH-BUTTONS SEE PAGE 1
R18
10M
R19
1M
C10
0.01 uF
U2
LF356
DISPLAY BUFFER AND ZERO OFFSET
Page 2 of 3
310 DISPLAY-C SCHEMATIC
Filename: 310display-c2.tcw
Date: 12/20/97
By: R. Fenske

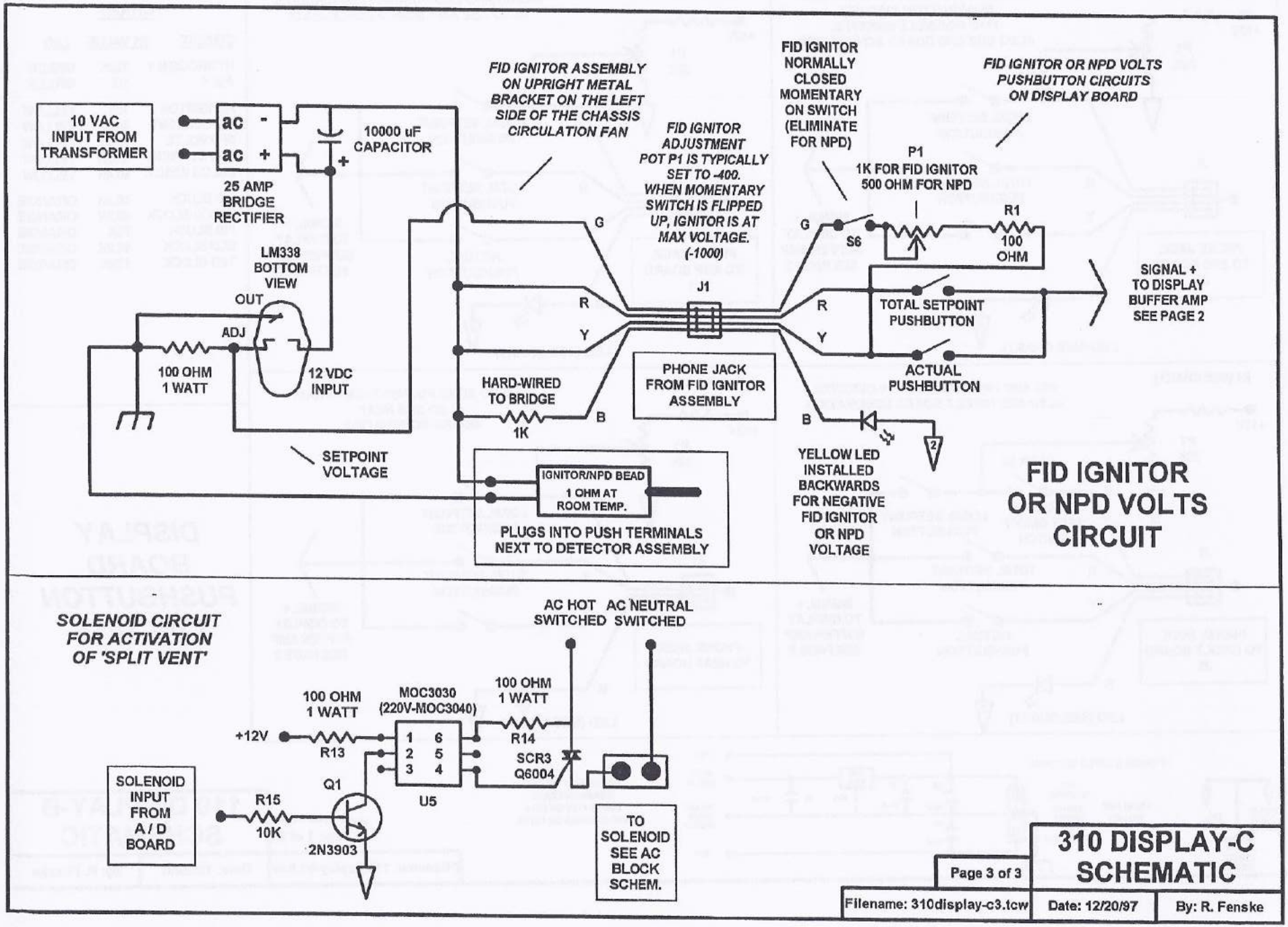
10 VAC INPUT FROM TRANSFORMER
ac -
ac +
25 AMP BRIDGE RECTIFIER
10000 uF CAPACITOR
LM338 BOTTOM VIEW
OUT
ADJ
100 OHM 1 WATT
12 VDC INPUT
SETPOINT VOLTAGE
FID IGNITOR ASSEMBLY ON UPRIGHT METAL BRACKET ON THE LEFT SIDE OF THE CHASSIS CIRCULATION FAN
G
R
Y
B
HARD-WIRED TO BRIDGE
1K
FID IGNITOR ADJUSTMENT POT P1 IS TYPICALLY SET TO -400. WHEN MOMENTARY SWITCH IS FLIPPED UP, IGNITOR IS AT MAX VOLTAGE. (-1000)
J1
PHONE JACK FROM FID IGNITOR ASSEMBLY
IGNITOR/NPD BEAD
1 OHM AT ROOM TEMP.
PLUGS INTO PUSH TERMINALS NEXT TO DETECTOR ASSEMBLY
FID IGNITOR NORMALLY CLOSED MOMENTARY ON SWITCH (ELIMINATE FOR NPD)
S6
P1
1K FOR FID IGNITOR
500 OHM FOR NPD
R1
100 OHM
FID IGNITOR OR NPD VOLTS PUSHBUTTON CIRCUITS ON DISPLAY BOARD
TOTAL SETPOINT PUSHBUTTON
ACTUAL PUSHBUTTON
SIGNAL + TO DISPLAY BUFFER AMP SEE PAGE 2
YELLOW LED INSTALLED BACKWARDS FOR NEGATIVE FID IGNITOR OR NPD VOLTAGE
2
FID IGNITOR OR NPD VOLTS CIRCUIT
SOLENOID CIRCUIT FOR ACTIVATION OF 'SPLIT VENT'
AC HOT SWITCHED
AC NEUTRAL SWITCHED
100 OHM 1 WATT
MOC3030 (220V-MOC3040)
100 OHM 1 WATT
+12V
R13
1 6
2 5
3 4
U5
R14
SCR3 Q6004
SOLENOID INPUT FROM A/D BOARD
R15
10K
Q1
2N3903
TO SOLENOID SEE AC BLOCK SCHEM.
310 DISPLAY-C SCHEMATIC
Page 3 of 3
Filename: 310display-c3.tcw
Date: 12/20/97
By: R. Fenske

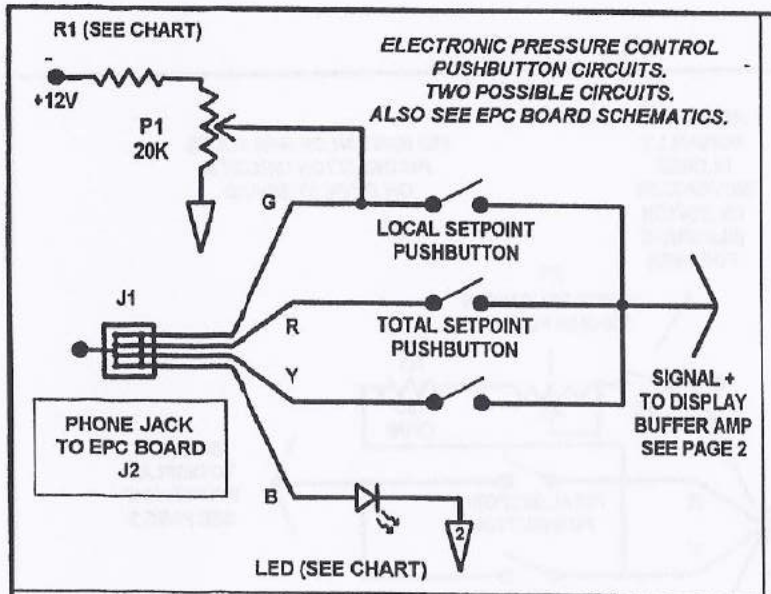

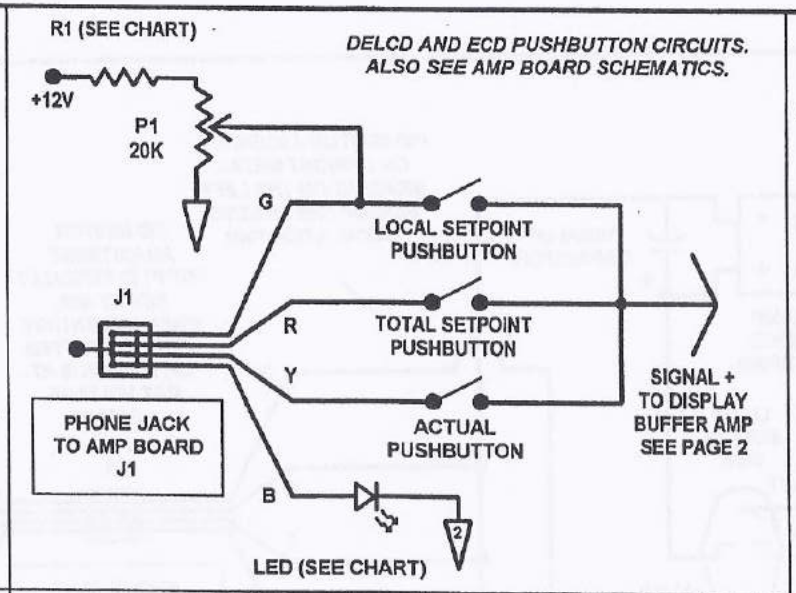

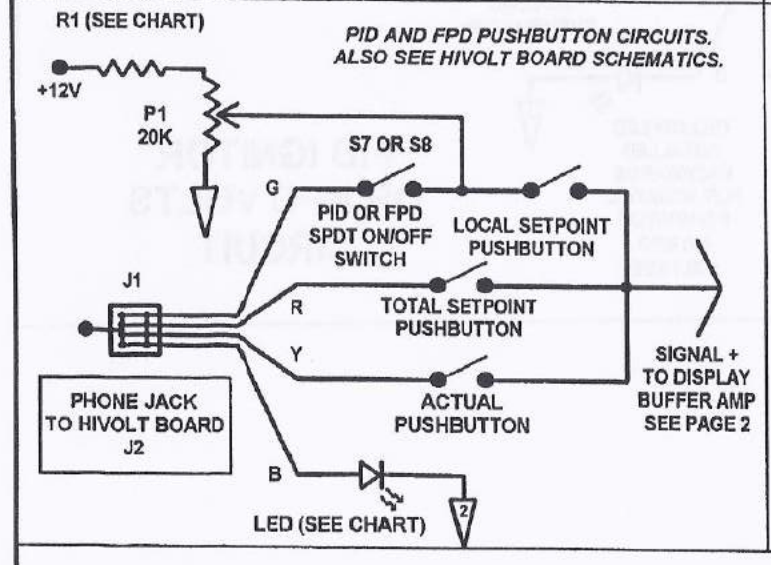

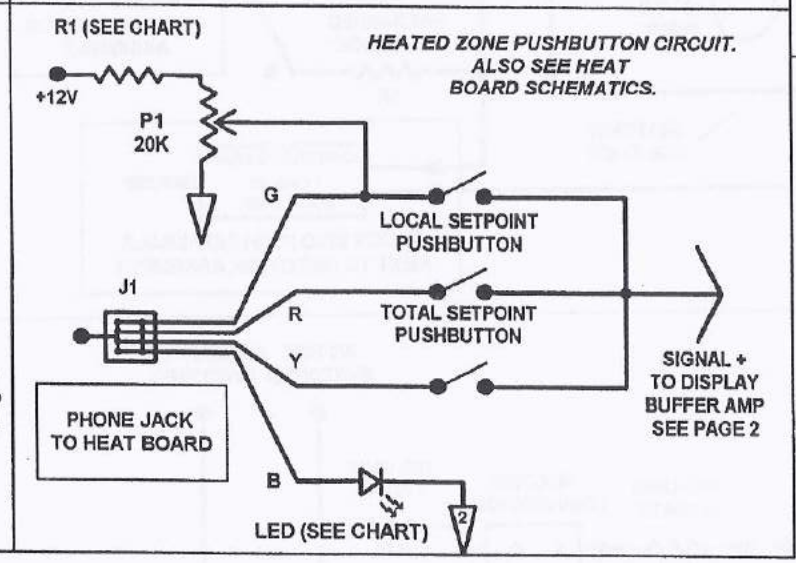

CHART

CIRCUIT	R1 VALUE	LED
HYDROGEN 1	220K	GREEN
AIR 1	1M	GREEN
FID IGNITOR	100	YELLOW
PID CURRENT	40.2K	YELLOW
FPD VOLTS	20K	YELLOW
ECD CURRENT	4.02K	YELLOW
DELCD REACT.	60.4K	YELLOW
FID BLOCK	40.2K	ORANGE
DELCD BLOCK	40.2K	ORANGE
PID BLOCK	75K	ORANGE
ECD BLOCK	44.2K	ORANGE
TCD BLOCK	120K	ORANGE

DISPLAY BOARD PUSHBUTTON CIRCUITS

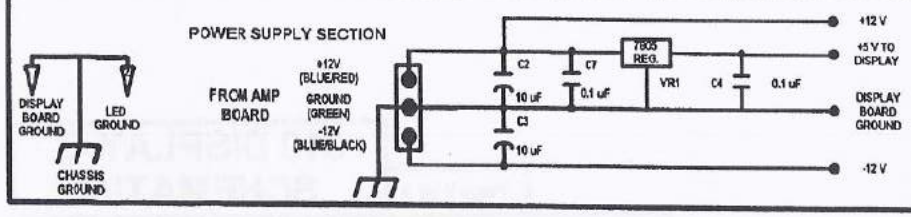

THE LM324's ON THIS BOARD OPERATE USING +12V ON PIN 4 AND GROUND ON PIN 11.

Page 1 of 2	110 DISPLAY-B SCHEMATIC	
Filename: 110display-b1.tcw	Date: 12/20/97	By: R. Fenske

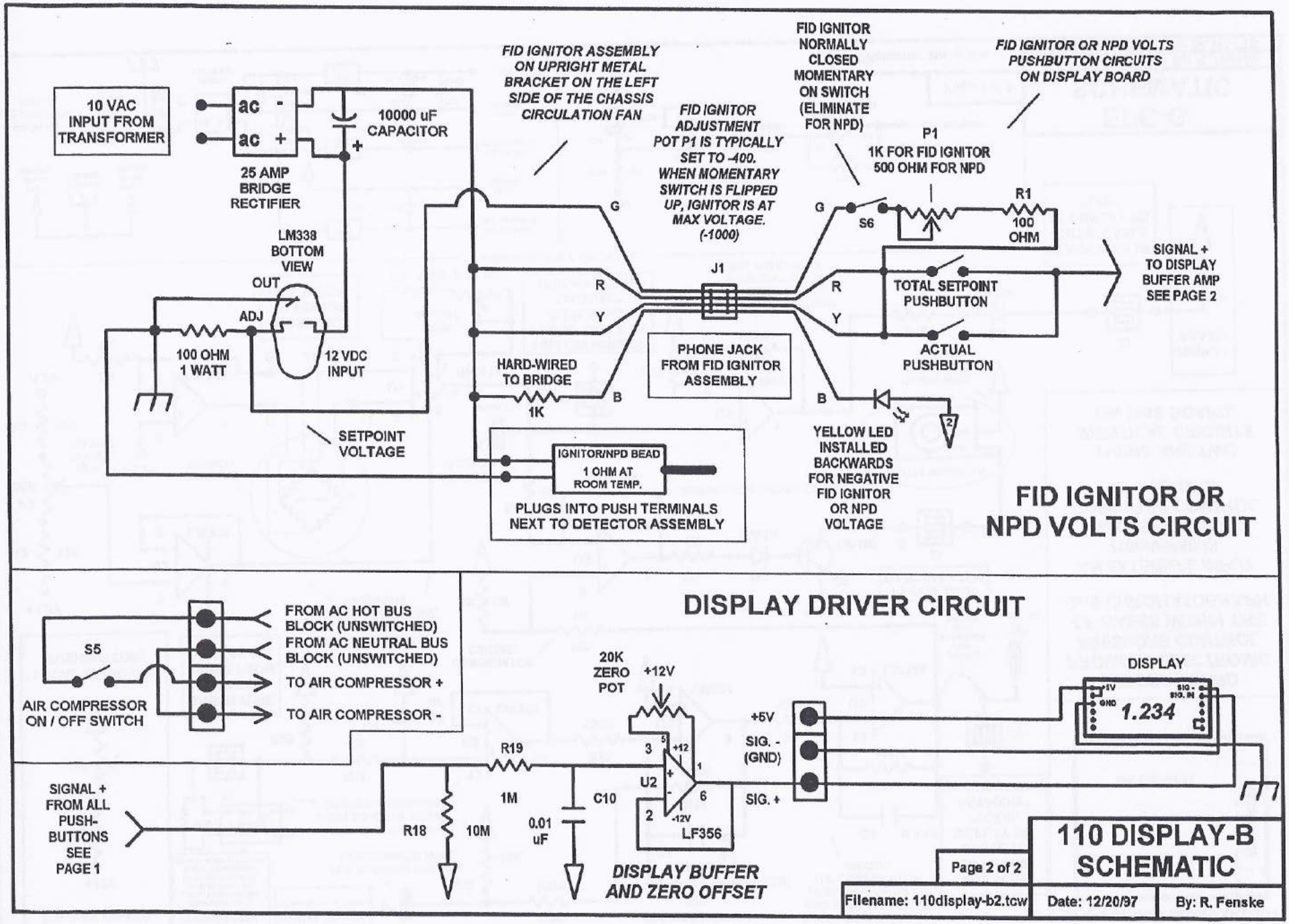
10 VAC INPUT FROM TRANSFORMER
ac -
ac +
25 AMP BRIDGE RECTIFIER
10000 uF CAPACITOR
LM338 BOTTOM VIEW
OUT
ADJ
100 OHM 1 WATT
12 VDC INPUT
SETPOINT VOLTAGE
FID IGNITOR ASSEMBLY ON UPRIGHT METAL BRACKET ON THE LEFT SIDE OF THE CHASSIS CIRCULATION FAN
FID IGNITOR ADJUSTMENT POT P1 IS TYPICALLY SET TO -400. WHEN MOMENTARY SWITCH IS FLIPPED UP, IGNITOR IS AT MAX VOLTAGE. (-1000)
FID IGNITOR NORMALLY CLOSED MOMENTARY ON SWITCH (ELIMINATE FOR NPD)
FID IGNITOR OR NPD VOLTS PUSHBUTTON CIRCUITS ON DISPLAY BOARD
P1
1K FOR FID IGNITOR
500 OHM FOR NPD
R1
100 OHM
S6
G
R
Y
B
J1
HARD-WIRED TO BRIDGE
1K
PHONE JACK FROM FID IGNITOR ASSEMBLY
TOTAL SETPOINT PUSHBUTTON
ACTUAL PUSHBUTTON
SIGNAL + TO DISPLAY BUFFER AMP SEE PAGE 2
YELLOW LED INSTALLED BACKWARDS FOR NEGATIVE FID IGNITOR OR NPD VOLTAGE
IGNITOR/NPD BEAD
1 OHM AT ROOM TEMP.
PLUGS INTO PUSH TERMINALS NEXT TO DETECTOR ASSEMBLY
FID IGNITOR OR NPD VOLTS CIRCUIT
DISPLAY DRIVER CIRCUIT
S5
AIR COMPRESSOR ON / OFF SWITCH
FROM AC HOT BUS BLOCK (UNSWITCHED)
FROM AC NEUTRAL BUS BLOCK (UNSWITCHED)
TO AIR COMPRESSOR +
TO AIR COMPRESSOR -
20K ZERO POT
+12V
R19
1M
R18
10M
0.01 uF
C10
U2
LF356
-12V
+5V
SIG. - (GND)
SIG. +
DISPLAY
1.234
SIGNAL + FROM ALL PUSH-BUTTONS SEE PAGE 1
DISPLAY BUFFER AND ZERO OFFSET
Page 2 of 2
110 DISPLAY-B SCHEMATIC
Filename: 110display-b2.tcw
Date: 12/20/97
By: R. Fenske

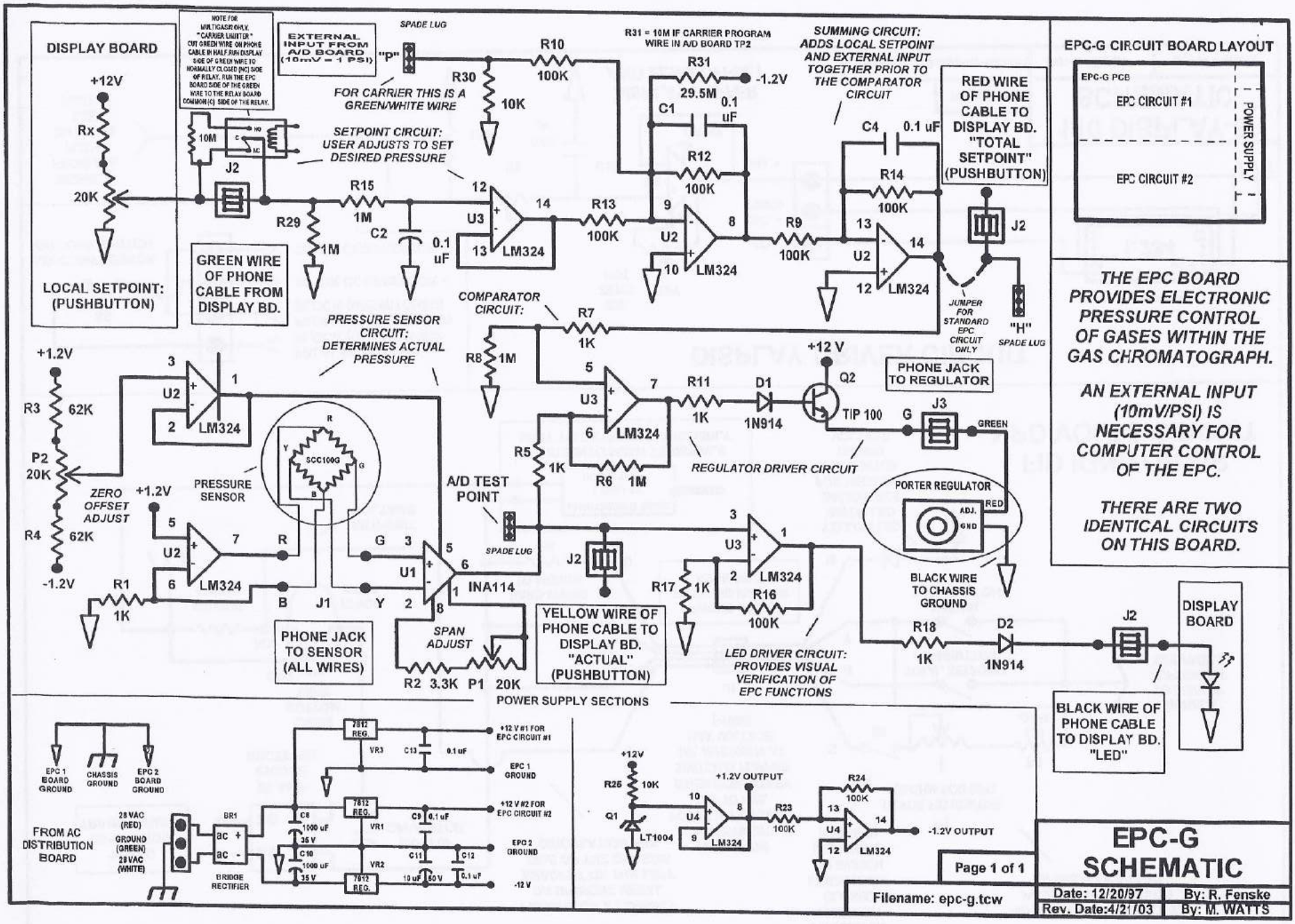
DISPLAY BOARD
+12V
Rx
20K
LOCAL SETPOINT: (PUSHBUTTON)
NOTE FOR MULTIGAS ONLY. "CARRIER LIMITER" CUT GREEN WIRE ON PHONE CABLE IN HALF. RUN DISPLAY SIDE OF GREEN WIRE TO NORMALLY CLOSED (NC) SIDE OF RELAY. RUN THE EPC BOARD SIDE OF THE GREEN WIRE TO THE RELAY BOARD COMMON (C) SIDE OF THE RELAY.
10M
NO
C
NC
J2
GREEN WIRE OF PHONE CABLE FROM DISPLAY BD.
EXTERNAL INPUT FROM A/D BOARD (10mV = 1 PSI)
"P"
SPADE LUG
FOR CARRIER THIS IS A GREEN/WHITE WIRE
R30
10K
R10
100K
SETPOINT CIRCUIT: USER ADJUSTS TO SET DESIRED PRESSURE
R29
1M
R15
1M
C2
0.1 uF
U3
LM324
R13
100K
R31 = 10M IF CARRIER PROGRAM WIRE IN A/D BOARD TP2
R31
29.5M
-1.2V
C1
0.1 uF
R12
100K
U2
LM324
R9
100K
SUMMING CIRCUIT: ADDS LOCAL SETPOINT AND EXTERNAL INPUT TOGETHER PRIOR TO THE COMPARATOR CIRCUIT
C4
0.1 uF
R14
100K
U2
LM324
RED WIRE OF PHONE CABLE TO DISPLAY BD. "TOTAL SETPOINT" (PUSHBUTTON)
J2
JUMPER FOR STANDARD EPC CIRCUIT ONLY
"H"
SPADE LUG
EPC-G CIRCUIT BOARD LAYOUT
EPC-G PCB
EPC CIRCUIT #1
EPC CIRCUIT #2
POWER SUPPLY
THE EPC BOARD PROVIDES ELECTRONIC PRESSURE CONTROL OF GASES WITHIN THE GAS CHROMATOGRAPH.
AN EXTERNAL INPUT (10mV/PSI) IS NECESSARY FOR COMPUTER CONTROL OF THE EPC.
THERE ARE TWO IDENTICAL CIRCUITS ON THIS BOARD.
COMPARATOR CIRCUIT:
R7
1K
R8
1M
U3
LM324
R11
1K
D1
1N914
+12 V
Q2
TIP 100
G
J3
GREEN
PHONE JACK TO REGULATOR
R5
1K
R6
1M
REGULATOR DRIVER CIRCUIT
PRESSURE SENSOR CIRCUIT: DETERMINES ACTUAL PRESSURE
+1.2V
R3
62K
U2
LM324
P2
20K
ZERO OFFSET ADJUST
R4
62K
-1.2V
PRESSURE SENSOR
SCC100G
R
Y
G
B
+1.2V
U2
LM324
R1
1K
R
B
J1
G
Y
U1
INA114
A/D TEST POINT
SPADE LUG
J2
SPAN ADJUST
R2 3.3K
P1 20K
PHONE JACK TO SENSOR (ALL WIRES)
YELLOW WIRE OF PHONE CABLE TO DISPLAY BD. "ACTUAL" (PUSHBUTTON)
PORTER REGULATOR
ADJ.
GND
RED
BLACK WIRE TO CHASSIS GROUND
U3
LM324
R17
1K
R16
100K
LED DRIVER CIRCUIT: PROVIDES VISUAL VERIFICATION OF EPC FUNCTIONS
R18
1K
D2
1N914
J2
DISPLAY BOARD
BLACK WIRE OF PHONE CABLE TO DISPLAY BD. "LED"
POWER SUPPLY SECTIONS
EPC 1 BOARD GROUND
CHASSIS GROUND
EPC 2 BOARD GROUND
FROM AC DISTRIBUTION BOARD
28 VAC (RED)
GROUND (GREEN)
28 VAC (WHITE)
BR1
ac +
ac -
BRIDGE RECTIFIER
7812 REG.
VR3
C13
0.1 uF
+12 V #1 FOR EPC CIRCUIT #1
EPC 1 GROUND
C8
1000 uF
35 V
VR1
C9
0.1 uF
+12 V #2 FOR EPC CIRCUIT #2
C10
1000 uF
35 V
VR2
C11
10 uF
50 V
C12
0.1 uF
EPC 2 GROUND
-12 V
+12V
R25
10K
Q1
LT1004
+1.2V OUTPUT
U4
LM324
R23
100K
R24
100K
U4
LM324
-1.2V OUTPUT
Page 1 of 1
Filename: epc-g.tcw
EPC-G SCHEMATIC
Date: 12/20/97
By: R. Fenske
Rev. Date:4/21/03
By: M. WATTS

THE OVEN BOARD PROVIDES CONTROL OF OVEN HEATING AND COOLING AND CONTROLS THE INTERNAL TEMERATURE OF THE G.C. CHASSIS. THIS PAGE DEPICTS THE POWER SUPPLY CIRCUIT, JITTER CIRCUIT AND THE CHASSIS COOLING CIRCUIT. SEE PAGE TWO FOR OVEN HEATING AND COOLING CIRCUITS.

CHASSIS COOLING FAN CIRCUIT

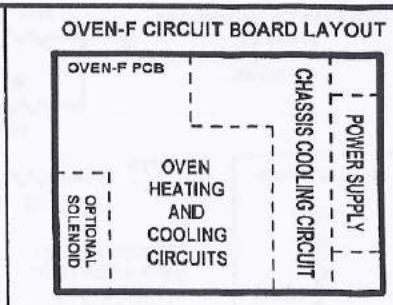

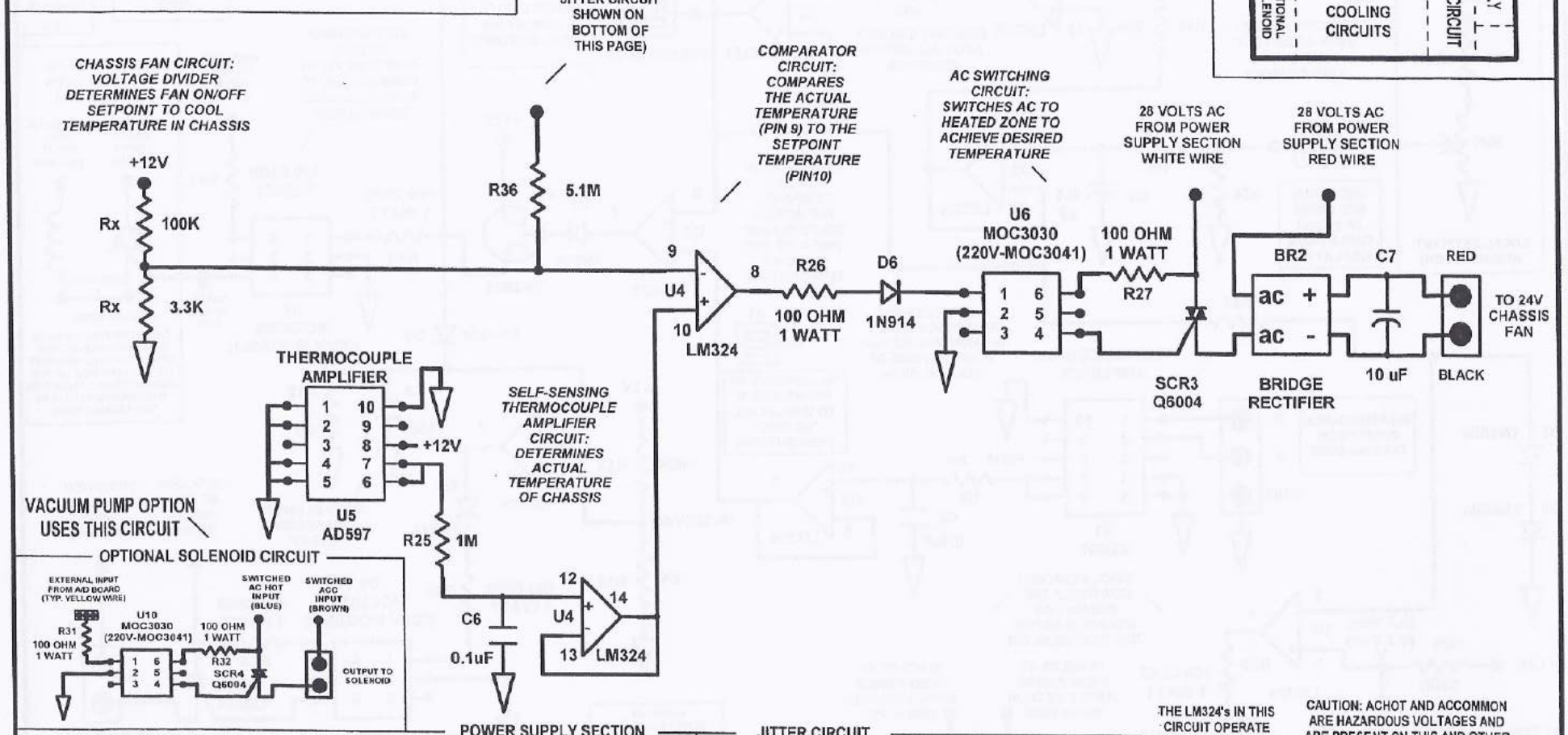

THE LM324's IN THIS CIRCUIT OPERATE USING +12V ON PIN 4 AND -12V ON PIN 11.

CAUTION: ACHOT AND ACCOMMON ARE HAZARDOUS VOLTAGES AND ARE PRESENT ON THIS AND OTHER CIRCUIT BOARDS WHILE THE G.C. POWER IS ON.

Page 1 of 2	OVEN-F SCHEMATIC	
Filename: oven-f pg1.tcw	Date: 12/20/97	By: R. Fenske
	Rev. Date: 3/09/01	By: R. Pfeifer

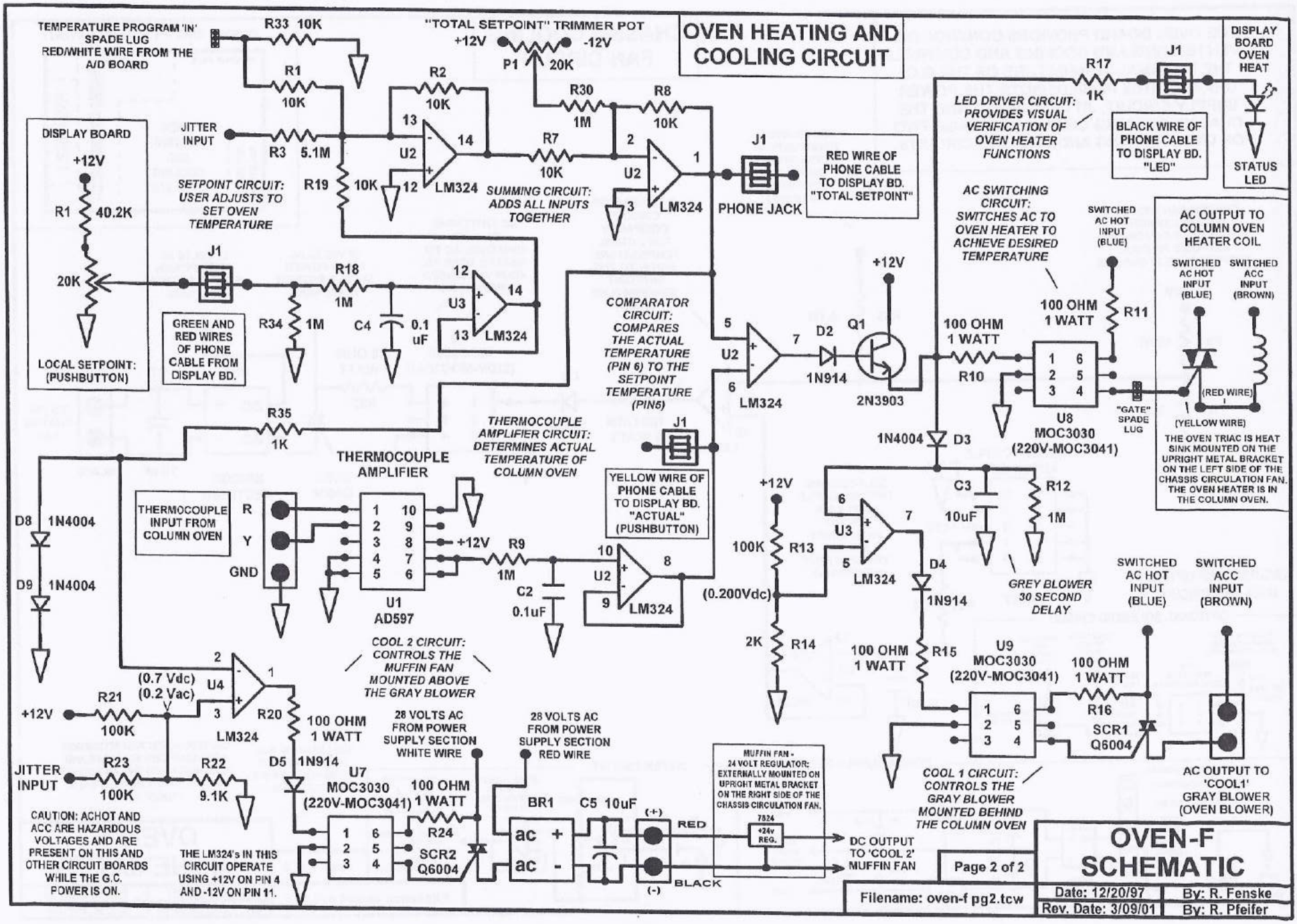
OVEN HEATING AND COOLING CIRCUIT
TEMPERATURE PROGRAM 'IN' SPADE LUG RED/WHITE WIRE FROM THE A/D BOARD
R33 10K
R1 10K
JITTER INPUT
R3 5.1M
R19 10K
"TOTAL SETPOINT" TRIMMER POT
+12V
-12V
P1 20K
R2 10K
U2
LM324
R30 1M
R7 10K
R8 10K
SUMMING CIRCUIT: ADDS ALL INPUTS TOGETHER
J1
PHONE JACK
RED WIRE OF PHONE CABLE TO DISPLAY BD. "TOTAL SETPOINT"
DISPLAY BOARD
+12V
R1 40.2K
20K
LOCAL SETPOINT: (PUSHBUTTON)
SETPOINT CIRCUIT: USER ADJUSTS TO SET OVEN TEMPERATURE
GREEN AND RED WIRES OF PHONE CABLE FROM DISPLAY BD.
R18 1M
R34 1M
C4 0.1 uF
U3
COMPARATOR CIRCUIT: COMPARES THE ACTUAL TEMPERATURE (PIN 6) TO THE SETPOINT TEMPERATURE (PIN5)
D2 1N914
Q1 2N3903
R35 1K
THERMOCOUPLE AMPLIFIER CIRCUIT: DETERMINES ACTUAL TEMPERATURE OF COLUMN OVEN
THERMOCOUPLE AMPLIFIER
THERMOCOUPLE INPUT FROM COLUMN OVEN
R
Y
GND
U1 AD597
R9 1M
C2 0.1uF
YELLOW WIRE OF PHONE CABLE TO DISPLAY BD. "ACTUAL" (PUSHBUTTON)
D8 1N4004
D9 1N4004
COOL 2 CIRCUIT: CONTROLS THE MUFFIN FAN MOUNTED ABOVE THE GRAY BLOWER
(0.7 Vdc)
(0.2 Vac)
U4
R21 100K
R20 100 OHM 1 WATT
D5 1N914
R22 9.1K
R23 100K
JITTER INPUT
CAUTION: ACHOT AND ACC ARE HAZARDOUS VOLTAGES AND ARE PRESENT ON THIS AND OTHER CIRCUIT BOARDS WHILE THE G.C. POWER IS ON.
THE LM324's IN THIS CIRCUIT OPERATE USING +12V ON PIN 4 AND -12V ON PIN 11.
U7 MOC3030 (220V-MOC3041)
R24 100 OHM 1 WATT
SCR2 Q6004
28 VOLTS AC FROM POWER SUPPLY SECTION WHITE WIRE
28 VOLTS AC FROM POWER SUPPLY SECTION RED WIRE
BR1
C5 10uF
RED
BLACK
MUFFIN FAN - 24 VOLT REGULATOR: EXTERNALLY MOUNTED ON UPRIGHT METAL BRACKET ON THE RIGHT SIDE OF THE CHASSIS CIRCULATION FAN.
7824 +24v REG.
DC OUTPUT TO 'COOL 2' MUFFIN FAN
R13 100K
R14 2K
(0.200Vdc)
D4 1N914
R15 100 OHM 1 WATT
U9 MOC3030 (220V-MOC3041)
R16 100 OHM 1 WATT
SCR1 Q6004
COOL 1 CIRCUIT: CONTROLS THE GRAY BLOWER MOUNTED BEHIND THE COLUMN OVEN
AC OUTPUT TO 'COOL1' GRAY BLOWER (OVEN BLOWER)
R17 1K
LED DRIVER CIRCUIT: PROVIDES VISUAL VERIFICATION OF OVEN HEATER FUNCTIONS
BLACK WIRE OF PHONE CABLE TO DISPLAY BD. "LED"
DISPLAY BOARD OVEN HEAT
STATUS LED
AC SWITCHING CIRCUIT: SWITCHES AC TO OVEN HEATER TO ACHIEVE DESIRED TEMPERATURE
SWITCHED AC HOT INPUT (BLUE)
100 OHM 1 WATT R11
R10 100 OHM 1 WATT
U8 MOC3030 (220V-MOC3041)
"GATE" SPADE LUG
1N4004 D3
C3 10uF
R12 1M
GREY BLOWER 30 SECOND DELAY
SWITCHED AC HOT INPUT (BLUE)
SWITCHED ACC INPUT (BROWN)
AC OUTPUT TO COLUMN OVEN HEATER COIL
SWITCHED AC HOT INPUT (BLUE)
SWITCHED ACC INPUT (BROWN)
(RED WIRE)
(YELLOW WIRE)
THE OVEN TRIAC IS HEAT SINK MOUNTED ON THE UPRIGHT METAL BRACKET ON THE LEFT SIDE OF THE CHASSIS CIRCULATION FAN. THE OVEN HEATER IS IN THE COLUMN OVEN.
Page 2 of 2
OVEN-F SCHEMATIC
Filename: oven-f pg2.tcw
Date: 12/20/97
By: R. Fenske
Rev. Date: 3/09/01
By: R. Pfeifer

THE DUAL OVEN BOARD #2 PROVIDES CONTROL OF OVEN HEATING AND COOLING.THIS PAGE DEPICTS THE POWER SUPPLY CIRCUIT AND JITTER CIRCUIT.
SEE PAGE TWO FOR OVEN HEATING AND COOLING CIRCUITS.

CHASSIS COOLING FAN CIRCUIT (NOT USED)

OVEN-F CIRCUIT BOARD LAYOUT

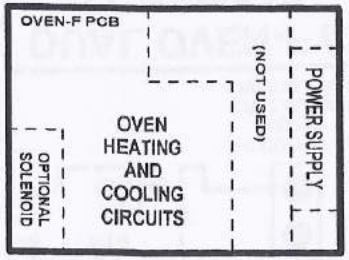

DUAL OVEN CONFIGURATION REQUIRES THE USE OF A STANDARD OVEN PCB FOR OVEN #1 AND A SECOND OVEN PCB WITHOUT THE CHASSIS COOLING FAN CIRCUIT FOR OVEN #2. IF NECESSARY, A STANDARD OVEN BOARD MAYBE USED FOR OVEN #2, PROVIDED THAT THE CHASSIS COOLING CIRCUIT IS LEFT UN-USED. OVEN-F #2 IS THE SCHEMATIC DIAGRAM FOR THE OVEN BOARD WITHOUT THE CHASSIS COOLING CIRCUIT; AS USED FOR THE SECOND OVEN IN A DUAL OVEN CONFIGURATION.

VACUUM PUMP OPTION USES THIS CIRCUIT

OPTIONAL SOLENOID CIRCUIT

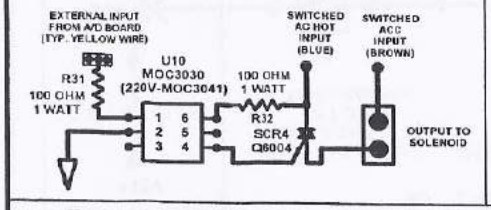

POWER SUPPLY SECTION

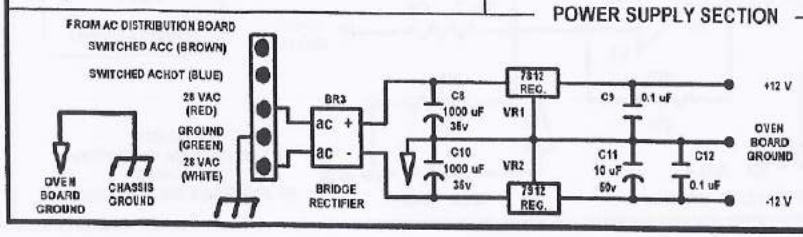

THE LM324's IN THIS CIRCUIT OPERATE USING +12V ON PIN 4 AND -12V ON PIN 11.

JITTER CIRCUIT

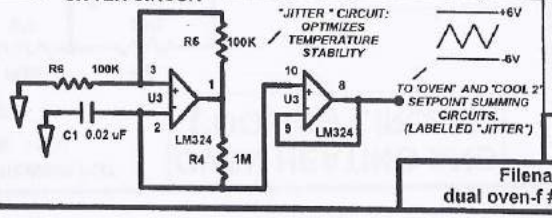

CAUTION: ACHOT AND ACC ARE HAZARDOUS VOLTAGES AND ARE PRESENT ON THIS AND OTHER CIRCUIT BOARDS WHILE THE G.C. POWER IS ON.

Page 1 of 2

DUAL OVEN-F #2 SCHEMATIC

Filename: dual oven-f #2 pg1.tcw	Date: 3/02/01	By: R. Pfeifer
	Rev. Date:	By:

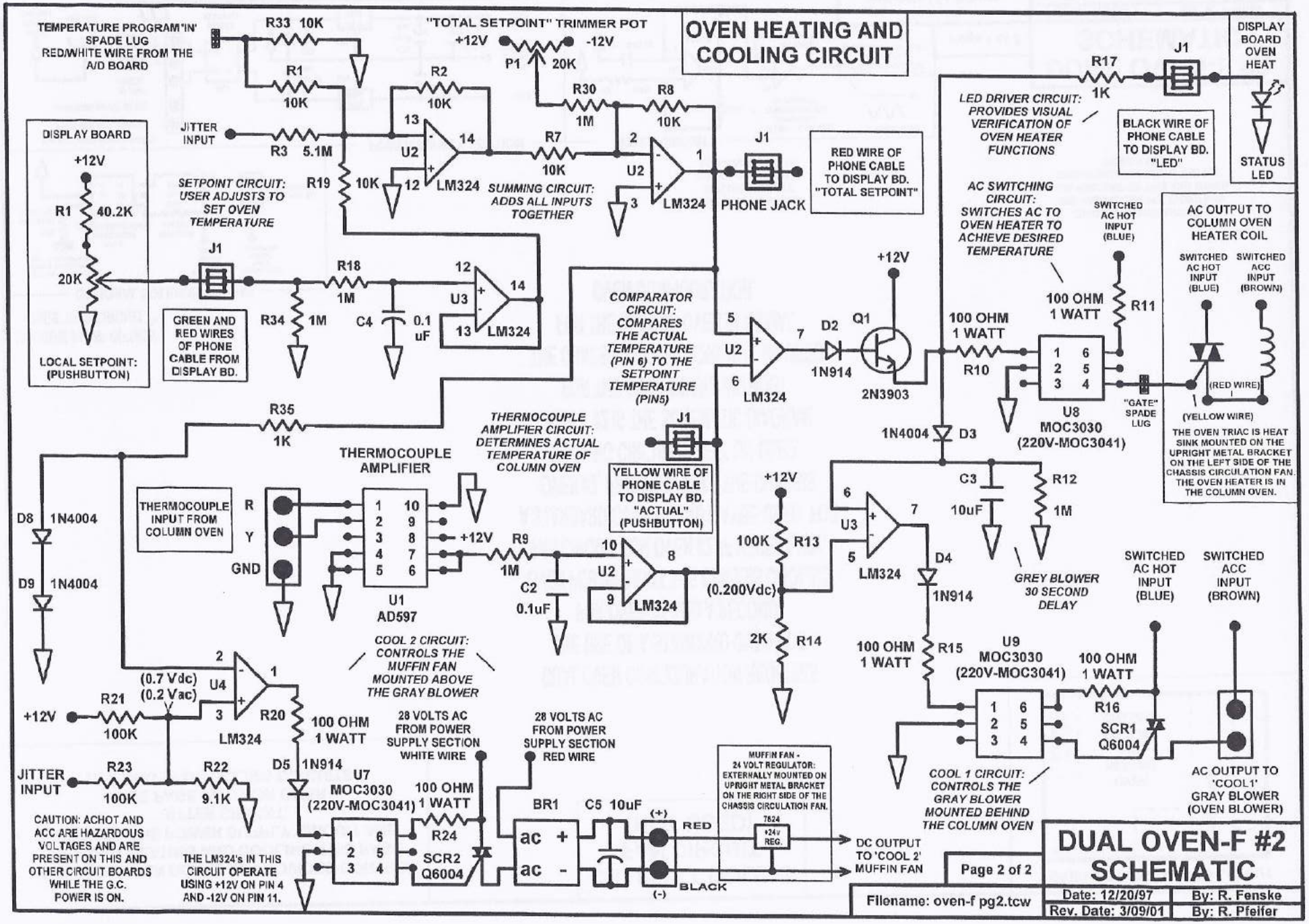
OVEN HEATING AND COOLING CIRCUIT
TEMPERATURE PROGRAM 'IN' SPADE LUG RED/WHITE WIRE FROM THE A/D BOARD
R33 10K
R1 10K
JITTER INPUT
R3 5.1M
R19 10K
"TOTAL SETPOINT" TRIMMER POT
+12V
-12V
P1 20K
R2 10K
U2
LM324
R30 1M
R8 10K
R7 10K
SUMMING CIRCUIT: ADDS ALL INPUTS TOGETHER
J1
PHONE JACK
RED WIRE OF PHONE CABLE TO DISPLAY BD. "TOTAL SETPOINT"
DISPLAY BOARD
+12V
R1 40.2K
20K
LOCAL SETPOINT: (PUSHBUTTON)
SETPOINT CIRCUIT: USER ADJUSTS TO SET OVEN TEMPERATURE
GREEN AND RED WIRES OF PHONE CABLE FROM DISPLAY BD.
R18 1M
R34 1M
C4 0.1 uF
U3
COMPARATOR CIRCUIT: COMPARES THE ACTUAL TEMPERATURE (PIN 6) TO THE SETPOINT TEMPERATURE (PIN5)
D2 1N914
Q1 2N3903
R35 1K
THERMOCOUPLE AMPLIFIER CIRCUIT: DETERMINES ACTUAL TEMPERATURE OF COLUMN OVEN
THERMOCOUPLE AMPLIFIER
THERMOCOUPLE INPUT FROM COLUMN OVEN
R
Y
GND
U1 AD597
YELLOW WIRE OF PHONE CABLE TO DISPLAY BD. "ACTUAL" (PUSHBUTTON)
R9 1M
C2 0.1uF
D8 1N4004
D9 1N4004
COOL 2 CIRCUIT: CONTROLS THE MUFFIN FAN MOUNTED ABOVE THE GRAY BLOWER
(0.7 Vdc)
(0.2 Vac)
R21 100K
R20 100 OHM 1 WATT
D5 1N914
R23 100K
R22 9.1K
28 VOLTS AC FROM POWER SUPPLY SECTION WHITE WIRE
28 VOLTS AC FROM POWER SUPPLY SECTION RED WIRE
U7 MOC3030 (220V-MOC3041)
100 OHM 1 WATT
R24
SCR2 Q6004
BR1
C5 10uF
MUFFIN FAN - 24 VOLT REGULATOR: EXTERNALLY MOUNTED ON UPRIGHT METAL BRACKET ON THE RIGHT SIDE OF THE CHASSIS CIRCULATION FAN.
7824
+24V REG.
RED
BLACK
DC OUTPUT TO 'COOL 2' MUFFIN FAN
CAUTION: ACHOT AND ACC ARE HAZARDOUS VOLTAGES AND ARE PRESENT ON THIS AND OTHER CIRCUIT BOARDS WHILE THE G.C. POWER IS ON.
THE LM324's IN THIS CIRCUIT OPERATE USING +12V ON PIN 4 AND -12V ON PIN 11.
R17 1K
LED DRIVER CIRCUIT: PROVIDES VISUAL VERIFICATION OF OVEN HEATER FUNCTIONS
BLACK WIRE OF PHONE CABLE TO DISPLAY BD. "LED"
DISPLAY BOARD OVEN HEAT
STATUS LED
AC SWITCHING CIRCUIT: SWITCHES AC TO OVEN HEATER TO ACHIEVE DESIRED TEMPERATURE
SWITCHED AC HOT INPUT (BLUE)
100 OHM 1 WATT R11
100 OHM 1 WATT R10
U8 MOC3030 (220V-MOC3041)
"GATE" SPADE LUG
AC OUTPUT TO COLUMN OVEN HEATER COIL
SWITCHED AC HOT INPUT (BLUE)
SWITCHED ACC INPUT (BROWN)
(RED WIRE)
(YELLOW WIRE)
THE OVEN TRIAC IS HEAT SINK MOUNTED ON THE UPRIGHT METAL BRACKET ON THE LEFT SIDE OF THE CHASSIS CIRCULATION FAN. THE OVEN HEATER IS IN THE COLUMN OVEN.
1N4004 D3
C3 10uF
R12 1M
GREY BLOWER 30 SECOND DELAY
100K R13
2K R14
(0.200Vdc)
D4 1N914
100 OHM 1 WATT R15
U9 MOC3030 (220V-MOC3041)
100 OHM 1 WATT R16
SCR1 Q6004
SWITCHED AC HOT INPUT (BLUE)
SWITCHED ACC INPUT (BROWN)
COOL 1 CIRCUIT: CONTROLS THE GRAY BLOWER MOUNTED BEHIND THE COLUMN OVEN
AC OUTPUT TO 'COOL1' GRAY BLOWER (OVEN BLOWER)
DUAL OVEN-F #2 SCHEMATIC
Page 2 of 2
Filename: oven-f pg2.tcw
Date: 12/20/97
By: R. Fenske
Rev. Date: 3/09/01
By: R. Pfeifer

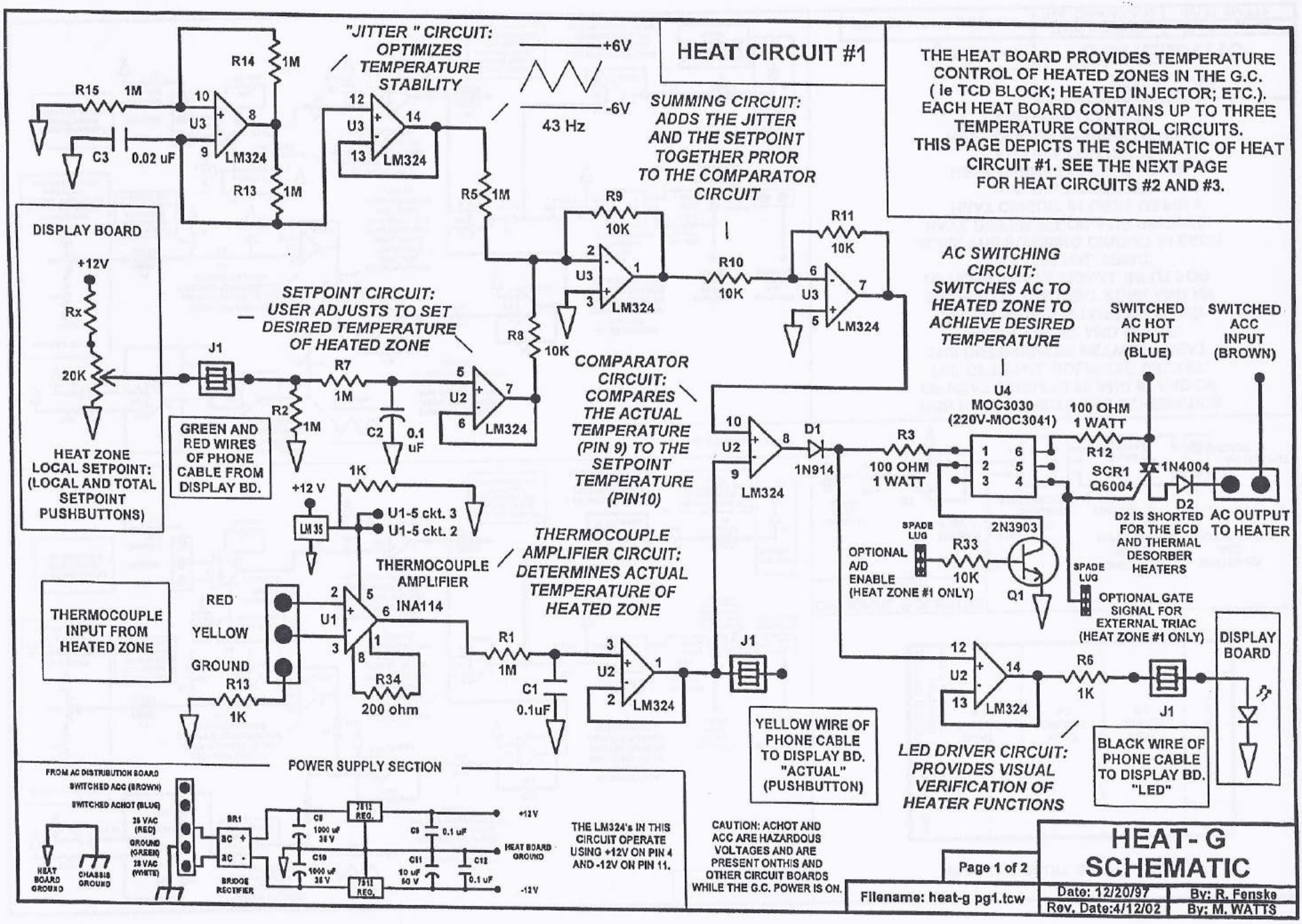
HEAT CIRCUIT #1
THE HEAT BOARD PROVIDES TEMPERATURE CONTROL OF HEATED ZONES IN THE G.C. (ie TCD BLOCK; HEATED INJECTOR; ETC.). EACH HEAT BOARD CONTAINS UP TO THREE TEMPERATURE CONTROL CIRCUITS. THIS PAGE DEPICTS THE SCHEMATIC OF HEAT CIRCUIT #1. SEE THE NEXT PAGE FOR HEAT CIRCUITS #2 AND #3.
"JITTER " CIRCUIT: OPTIMIZES TEMPERATURE STABILITY
+6V
-6V
43 Hz
SUMMING CIRCUIT: ADDS THE JITTER AND THE SETPOINT TOGETHER PRIOR TO THE COMPARATOR CIRCUIT
R15 1M
C3 0.02 uF
R14 1M
R13 1M
U3 LM324
R5 1M
R9 10K
R10 10K
R11 10K
R8 10K
DISPLAY BOARD
+12V
Rx
20K
HEAT ZONE LOCAL SETPOINT: (LOCAL AND TOTAL SETPOINT PUSHBUTTONS)
SETPOINT CIRCUIT: USER ADJUSTS TO SET DESIRED TEMPERATURE OF HEATED ZONE
J1
R7 1M
R2 1M
C2 0.1 uF
U2 LM324
GREEN AND RED WIRES OF PHONE CABLE FROM DISPLAY BD.
COMPARATOR CIRCUIT: COMPARES THE ACTUAL TEMPERATURE (PIN 9) TO THE SETPOINT TEMPERATURE (PIN10)
AC SWITCHING CIRCUIT: SWITCHES AC TO HEATED ZONE TO ACHIEVE DESIRED TEMPERATURE
SWITCHED AC HOT INPUT (BLUE)
SWITCHED ACC INPUT (BROWN)
U4 MOC3030 (220V-MOC3041)
100 OHM 1 WATT
R12
SCR1 Q6004
1N4004
D2
D2 IS SHORTED FOR THE ECD AND THERMAL DESORBER HEATERS
AC OUTPUT TO HEATER
D1 1N914
R3 100 OHM 1 WATT
+12 V
1K
LM 35
U1-5 ckt. 3
U1-5 ckt. 2
THERMOCOUPLE AMPLIFIER
THERMOCOUPLE AMPLIFIER CIRCUIT: DETERMINES ACTUAL TEMPERATURE OF HEATED ZONE
THERMOCOUPLE INPUT FROM HEATED ZONE
RED
YELLOW
GROUND
R13 1K
U1 INA114
R34 200 ohm
R1 1M
C1 0.1uF
SPADE LUG
OPTIONAL A/D ENABLE (HEAT ZONE #1 ONLY)
R33 10K
2N3903
Q1
SPADE LUG
OPTIONAL GATE SIGNAL FOR EXTERNAL TRIAC (HEAT ZONE #1 ONLY)
DISPLAY BOARD
R6 1K
YELLOW WIRE OF PHONE CABLE TO DISPLAY BD. "ACTUAL" (PUSHBUTTON)
LED DRIVER CIRCUIT: PROVIDES VISUAL VERIFICATION OF HEATER FUNCTIONS
BLACK WIRE OF PHONE CABLE TO DISPLAY BD. "LED"
POWER SUPPLY SECTION
FROM AC DISTRIBUTION BOARD
SWITCHED ACC (BROWN)
SWITCHED ACHOT (BLUE)
25 VAC (RED)
GROUND (GREEN)
25 VAC (WHITE)
HEAT BOARD GROUND
CHASSIS GROUND
BR1
BRIDGE RECTIFIER
7812 REG.
7912 REG.
C8 1000 uF 35 V
C10 1000 uF 35 V
C9 0.1 uF
C11 10 uF 50 V
C12 0.1 uF
+12V
HEAT BOARD GROUND
-12V
THE LM324's IN THIS CIRCUIT OPERATE USING +12V ON PIN 4 AND -12V ON PIN 11.
CAUTION: ACHOT AND ACC ARE HAZARDOUS VOLTAGES AND ARE PRESENT ONTHIS AND OTHER CIRCUIT BOARDS WHILE THE G.C. POWER IS ON.
Page 1 of 2
HEAT- G SCHEMATIC
Filename: heat-g pg1.tcw
Date: 12/20/97
By: R. Fenske
Rev. Date:4/12/02
By: M. WATTS

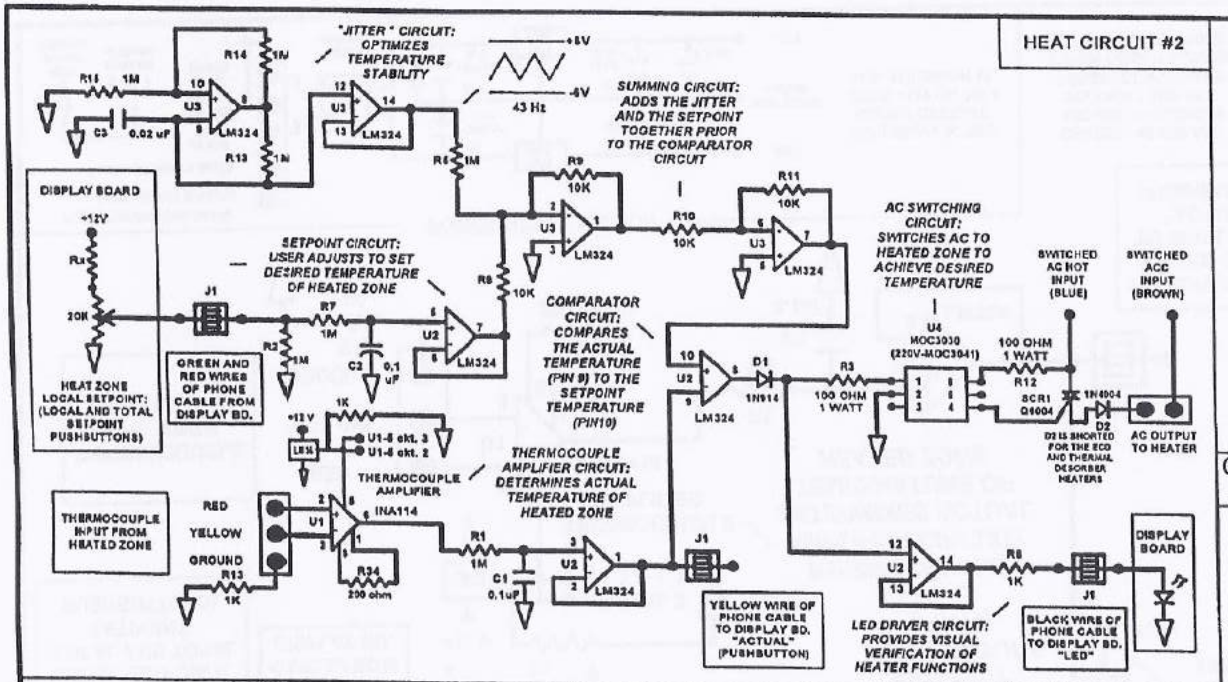

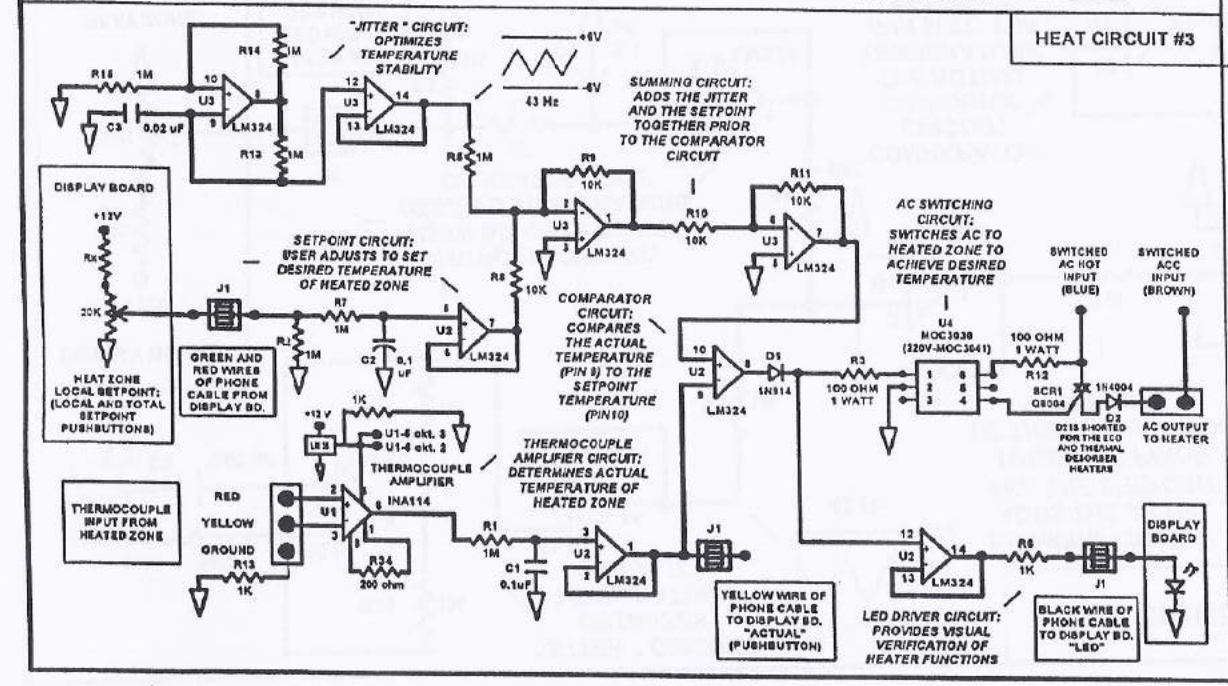

HEAT-G CIRCUIT BOARD LAYOUT

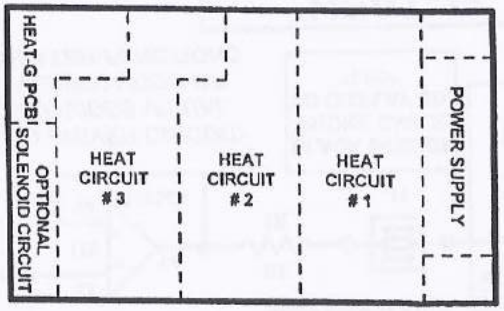

OPTIONAL SOLENOID CIRCUIT

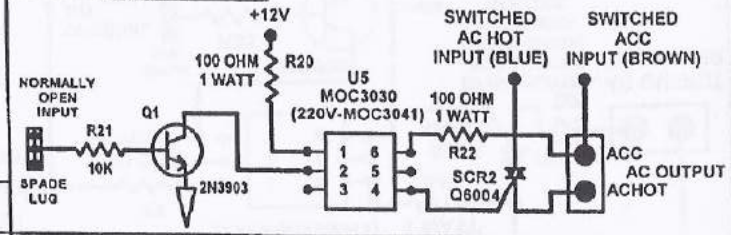

THIS PAGE DEPICTS THE SCHEMATICS OF HEAT CIRCUITS #2 AND #3 AND OF THE OPTIONAL SOLENOID CIRCUIT. THE DIFFERENCES BETWEEN HEAT CIRCUITS #1, #2 AND #3 ARE: CIRCUIT #1 HAS AN OPTIONAL A/D ENABLE OF THE HEAT ZONE AND AN OPTIONAL GATE SIGNAL INPUT FOR AN EXTERNAL TRIAC. ALSO, THE SUMMING CIRCUIT IN EACH HAVE DIFFERENT OP-AMP PINOUTS: HEAT CIRCUIT #1 USES U3 PIN 1 AND PIN 7 OUTPUTS. HEAT CIRCUIT #2 USES U5 PIN 1 AND PIN 7 OUTPUTS. HEAT CIRCUIT #3 USES U5 PIN 14 AND PIN 8 OUTPUTS.

Page 2 of 2	**HEAT-G SCHEMATIC**	
Filename: heat-g pg2.tcw	Date: 12/20/97	By: R. Fenske
	Rev. Date:4/12/02	By: M. WATTS

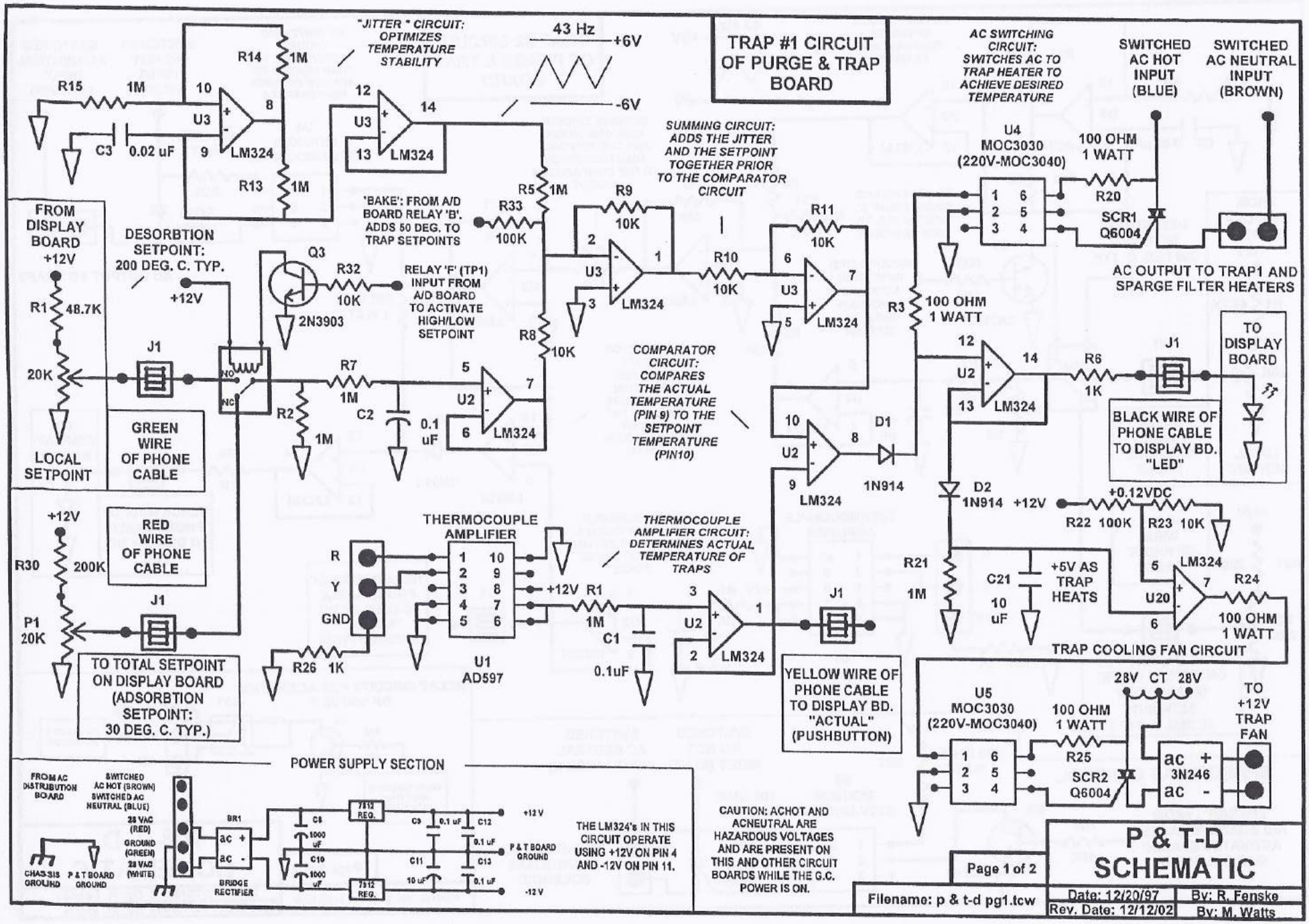
TRAP #1 CIRCUIT OF PURGE & TRAP BOARD
"JITTER" CIRCUIT: OPTIMIZES TEMPERATURE STABILITY
43 Hz
+6V
-6V
R15 1M
R14 1M
R13 1M
C3 0.02 uF
U3 LM324
SUMMING CIRCUIT: ADDS THE JITTER AND THE SETPOINT TOGETHER PRIOR TO THE COMPARATOR CIRCUIT
'BAKE': FROM A/D BOARD RELAY 'B'. ADDS 50 DEG. TO TRAP SETPOINTS
R33 100K
R5 1M
R9 10K
R10 10K
R11 10K
R8 10K
FROM DISPLAY BOARD +12V
DESORBTION SETPOINT: 200 DEG. C. TYP.
R1 48.7K
20K
LOCAL SETPOINT
J1
GREEN WIRE OF PHONE CABLE
Q3 2N3903
R32 10K
+12V
RELAY 'F' (TP1) INPUT FROM A/D BOARD TO ACTIVATE HIGH/LOW SETPOINT
R7 1M
R2 1M
C2 0.1 uF
U2 LM324
COMPARATOR CIRCUIT: COMPARES THE ACTUAL TEMPERATURE (PIN 9) TO THE SETPOINT TEMPERATURE (PIN10)
D1 1N914
D2 1N914
RED WIRE OF PHONE CABLE
R30 200K
P1 20K
TO TOTAL SETPOINT ON DISPLAY BOARD (ADSORBTION SETPOINT: 30 DEG. C. TYP.)
THERMOCOUPLE AMPLIFIER
R
Y
GND
R26 1K
U1 AD597
THERMOCOUPLE AMPLIFIER CIRCUIT: DETERMINES ACTUAL TEMPERATURE OF TRAPS
R1 1M
C1 0.1uF
YELLOW WIRE OF PHONE CABLE TO DISPLAY BD. "ACTUAL" (PUSHBUTTON)
AC SWITCHING CIRCUIT: SWITCHES AC TO TRAP HEATER TO ACHIEVE DESIRED TEMPERATURE
U4 MOC3030 (220V-MOC3040)
100 OHM 1 WATT
R20
SCR1 Q6004
SWITCHED AC HOT INPUT (BLUE)
SWITCHED AC NEUTRAL INPUT (BROWN)
AC OUTPUT TO TRAP1 AND SPARGE FILTER HEATERS
R3 100 OHM 1 WATT
R6 1K
TO DISPLAY BOARD
BLACK WIRE OF PHONE CABLE TO DISPLAY BD. "LED"
+0.12VDC
R22 100K
R23 10K
R21 1M
C21 10 uF
+5V AS TRAP HEATS
LM324
R24 100 OHM 1 WATT
TRAP COOLING FAN CIRCUIT
U5 MOC3030 (220V-MOC3040)
28V CT 28V
R25
SCR2 Q6004
3N246
TO +12V TRAP FAN
POWER SUPPLY SECTION
FROM AC DISTRIBUTION BOARD
SWITCHED AC HOT (BROWN)
SWITCHED AC NEUTRAL (BLUE)
28 VAC (RED)
GROUND (GREEN)
28 VAC (WHITE)
CHASSIS GROUND
P & T BOARD GROUND
BR1
BRIDGE RECTIFIER
7812 REG.
7912 REG.
+12 V
P & T BOARD GROUND
-12 V
THE LM324's IN THIS CIRCUIT OPERATE USING +12V ON PIN 4 AND -12V ON PIN 11.
CAUTION: ACHOT AND ACNEUTRAL ARE HAZARDOUS VOLTAGES AND ARE PRESENT ON THIS AND OTHER CIRCUIT BOARDS WHILE THE G.C. POWER IS ON.
Page 1 of 2
P & T-D SCHEMATIC
Filename: p & t-d pg1.tcw
Date: 12/20/97
By: R. Fenske
Rev. Date: 12/12/02
By: M. Watts

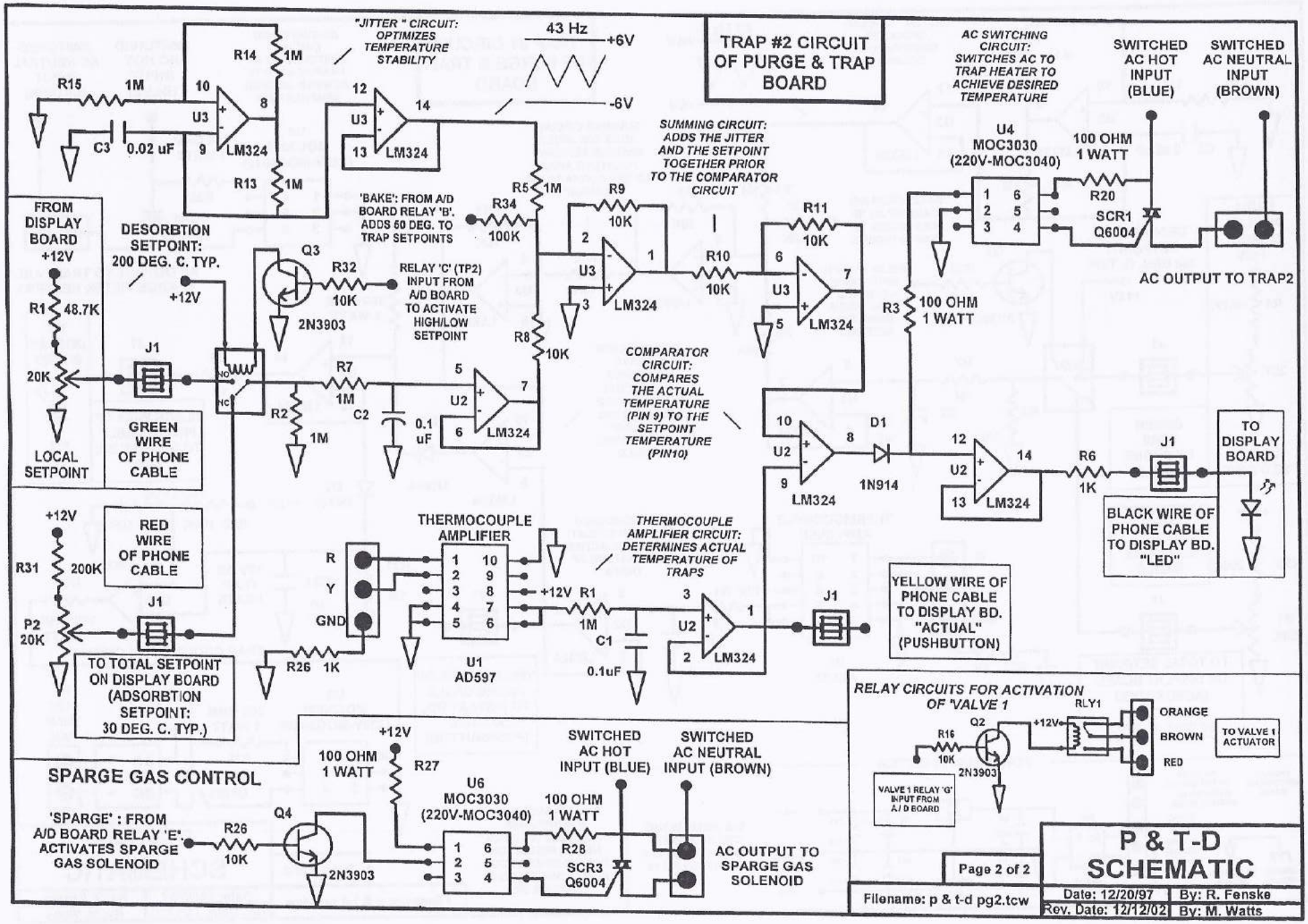
TRAP #2 CIRCUIT OF PURGE & TRAP BOARD
"JITTER " CIRCUIT: OPTIMIZES TEMPERATURE STABILITY
43 Hz
+6V
-6V
R14 1M
R15 1M
C3 0.02 uF
U3 LM324
R13 1M
SUMMING CIRCUIT: ADDS THE JITTER AND THE SETPOINT TOGETHER PRIOR TO THE COMPARATOR CIRCUIT
AC SWITCHING CIRCUIT: SWITCHES AC TO TRAP HEATER TO ACHIEVE DESIRED TEMPERATURE
SWITCHED AC HOT INPUT (BLUE)
SWITCHED AC NEUTRAL INPUT (BROWN)
U4 MOC3030 (220V-MOC3040)
100 OHM 1 WATT
R20
SCR1 Q6004
AC OUTPUT TO TRAP2
FROM DISPLAY BOARD +12V
DESORBTION SETPOINT: 200 DEG. C. TYP.
'BAKE': FROM A/D BOARD RELAY 'B'. ADDS 60 DEG. TO TRAP SETPOINTS
R34 100K
R5 1M
R9 10K
R11 10K
R10 10K
Q3 2N3903
R32 10K
RELAY 'C' (TP2) INPUT FROM A/D BOARD TO ACTIVATE HIGH/LOW SETPOINT
R1 48.7K
20K
J1
LOCAL SETPOINT
GREEN WIRE OF PHONE CABLE
R7 1M
R2 1M
C2 0.1 uF
U2 LM324
R8 10K
COMPARATOR CIRCUIT: COMPARES THE ACTUAL TEMPERATURE (PIN 9) TO THE SETPOINT TEMPERATURE (PIN10)
R3 100 OHM 1 WATT
D1 1N914
R6 1K
TO DISPLAY BOARD
BLACK WIRE OF PHONE CABLE TO DISPLAY BD. "LED"
+12V
R31 200K
P2 20K
RED WIRE OF PHONE CABLE
TO TOTAL SETPOINT ON DISPLAY BOARD (ADSORBTION SETPOINT: 30 DEG. C. TYP.)
THERMOCOUPLE AMPLIFIER
R
Y
GND
U1 AD597
R26 1K
THERMOCOUPLE AMPLIFIER CIRCUIT: DETERMINES ACTUAL TEMPERATURE OF TRAPS
R1 1M
C1 0.1uF
YELLOW WIRE OF PHONE CABLE TO DISPLAY BD. "ACTUAL" (PUSHBUTTON)
RELAY CIRCUITS FOR ACTIVATION OF 'VALVE 1
RLY1
Q2 2N3903
R16 10K
VALVE 1 RELAY 'G' INPUT FROM A/D BOARD
ORANGE
BROWN
RED
TO VALVE 1 ACTUATOR
SPARGE GAS CONTROL
100 OHM 1 WATT
R27
U6 MOC3030 (220V-MOC3040)
SWITCHED AC HOT INPUT (BLUE)
SWITCHED AC NEUTRAL INPUT (BROWN)
100 OHM 1 WATT
R28
SCR3 Q6004
AC OUTPUT TO SPARGE GAS SOLENOID
'SPARGE' : FROM A/D BOARD RELAY 'E'. ACTIVATES SPARGE GAS SOLENOID
R26 10K
Q4 2N3903
Page 2 of 2
P & T-D SCHEMATIC
Filename: p & t-d pg2.tcw
Date: 12/20/97
By: R. Fenske
Rev. Date: 12/12/02
By: M. Watts

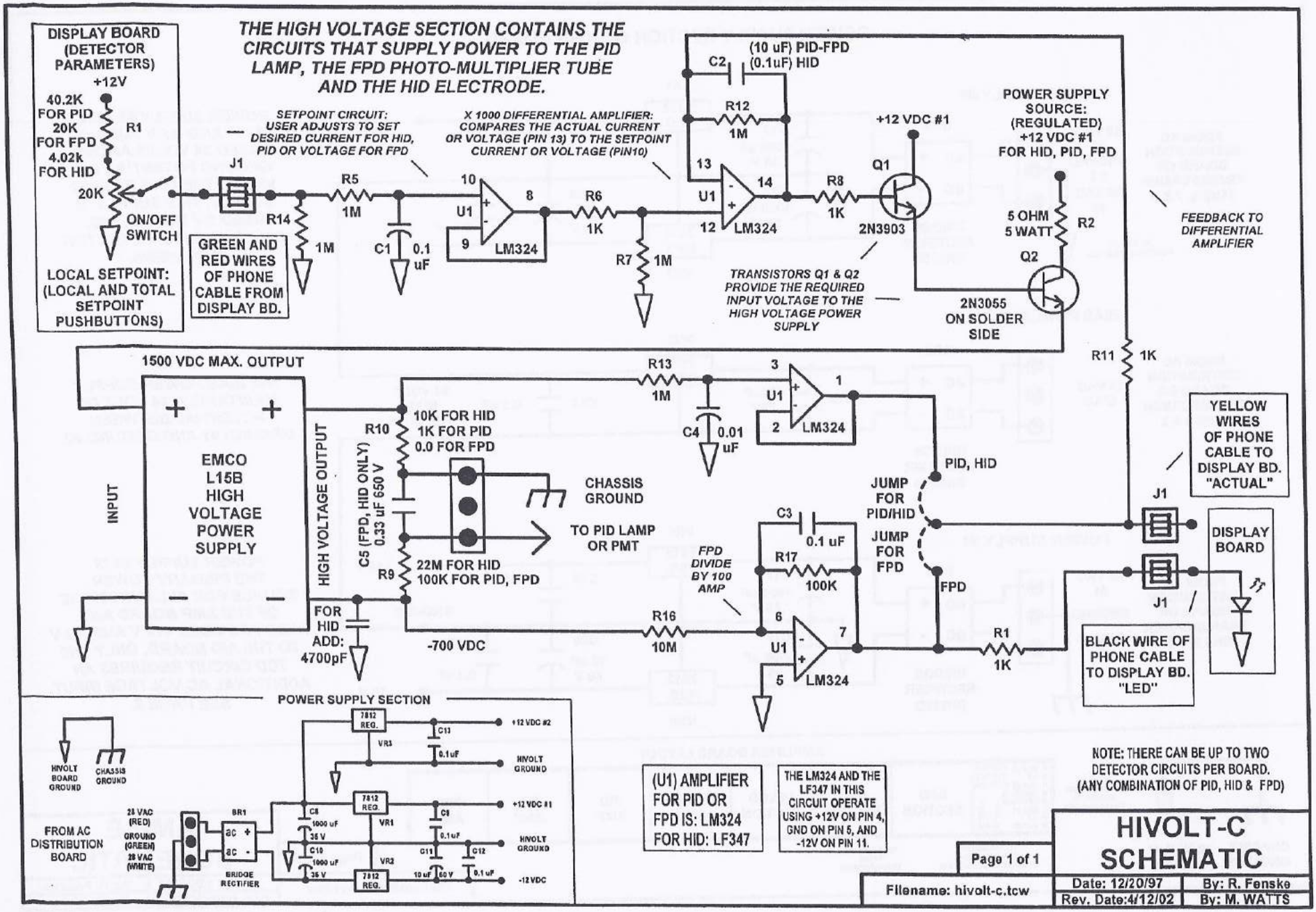
THE HIGH VOLTAGE SECTION CONTAINS THE CIRCUITS THAT SUPPLY POWER TO THE PID LAMP, THE FPD PHOTO-MULTIPLIER TUBE AND THE HID ELECTRODE.
DISPLAY BOARD (DETECTOR PARAMETERS)
+12V
40.2K FOR PID
20K FOR FPD
4.02k FOR HID
R1
20K
ON/OFF SWITCH
LOCAL SETPOINT: (LOCAL AND TOTAL SETPOINT PUSHBUTTONS)
J1
GREEN AND RED WIRES OF PHONE CABLE FROM DISPLAY BD.
SETPOINT CIRCUIT: USER ADJUSTS TO SET DESIRED CURRENT FOR HID, PID OR VOLTAGE FOR FPD
X 1000 DIFFERENTIAL AMPLIFIER: COMPARES THE ACTUAL CURRENT OR VOLTAGE (PIN 13) TO THE SETPOINT CURRENT OR VOLTAGE (PIN10)
R14 1M
R5 1M
C1 0.1 uF
U1 LM324
R6 1K
R7 1M
C2 (10 uF) PID-FPD (0.1uF) HID
R12 1M
+12 VDC #1
Q1 2N3903
R8 1K
TRANSISTORS Q1 & Q2 PROVIDE THE REQUIRED INPUT VOLTAGE TO THE HIGH VOLTAGE POWER SUPPLY
POWER SUPPLY SOURCE: (REGULATED) +12 VDC #1 FOR HID, PID, FPD
5 OHM 5 WATT R2
Q2 2N3055 ON SOLDER SIDE
FEEDBACK TO DIFFERENTIAL AMPLIFIER
R11 1K
1500 VDC MAX. OUTPUT
INPUT
EMCO L15B HIGH VOLTAGE POWER SUPPLY
HIGH VOLTAGE OUTPUT
R10 10K FOR HID 1K FOR PID 0.0 FOR FPD
C5 (FPD, HID ONLY) 0.33 uF 650 V
R9 22M FOR HID 100K FOR PID, FPD
CHASSIS GROUND
TO PID LAMP OR PMT
FOR HID ADD: 4700pF
-700 VDC
R13 1M
C4 0.01 uF
U1 LM324
PID, HID
JUMP FOR PID/HID
JUMP FOR FPD
FPD
C3 0.1 uF
R17 100K
FPD DIVIDE BY 100 AMP
R16 10M
U1 LM324
R1 1K
YELLOW WIRES OF PHONE CABLE TO DISPLAY BD. "ACTUAL"
J1
DISPLAY BOARD
BLACK WIRE OF PHONE CABLE TO DISPLAY BD. "LED"
POWER SUPPLY SECTION
HIVOLT BOARD GROUND
CHASSIS GROUND
FROM AC DISTRIBUTION BOARD
28 VAC (RED)
GROUND (GREEN)
28 VAC (WHITE)
BR1
BRIDGE RECTIFIER
7812 REG.
VR3
VR1
VR2
C13 0.1 uF
C8 1000 uF 35 V
C10 1000 uF 35 V
C9 0.1 uF
C11 10 uF 50 V
C12 0.1 uF
+12 VDC #2
HIVOLT GROUND
+12 VDC #1
HIVOLT GROUND
-12 VDC
(U1) AMPLIFIER FOR PID OR FPD IS: LM324 FOR HID: LF347
THE LM324 AND THE LF347 IN THIS CIRCUIT OPERATE USING +12V ON PIN 4, GND ON PIN 5, AND -12V ON PIN 11.
NOTE: THERE CAN BE UP TO TWO DETECTOR CIRCUITS PER BOARD. (ANY COMBINATION OF PID, HID & FPD)
Page 1 of 1
HIVOLT-C SCHEMATIC
Filename: hivolt-c.tcw
Date: 12/20/97
By: R. Fenske
Rev. Date:4/12/02
By: M. WATTS

POWER SUPPLY SECTION OF AMP BOARD

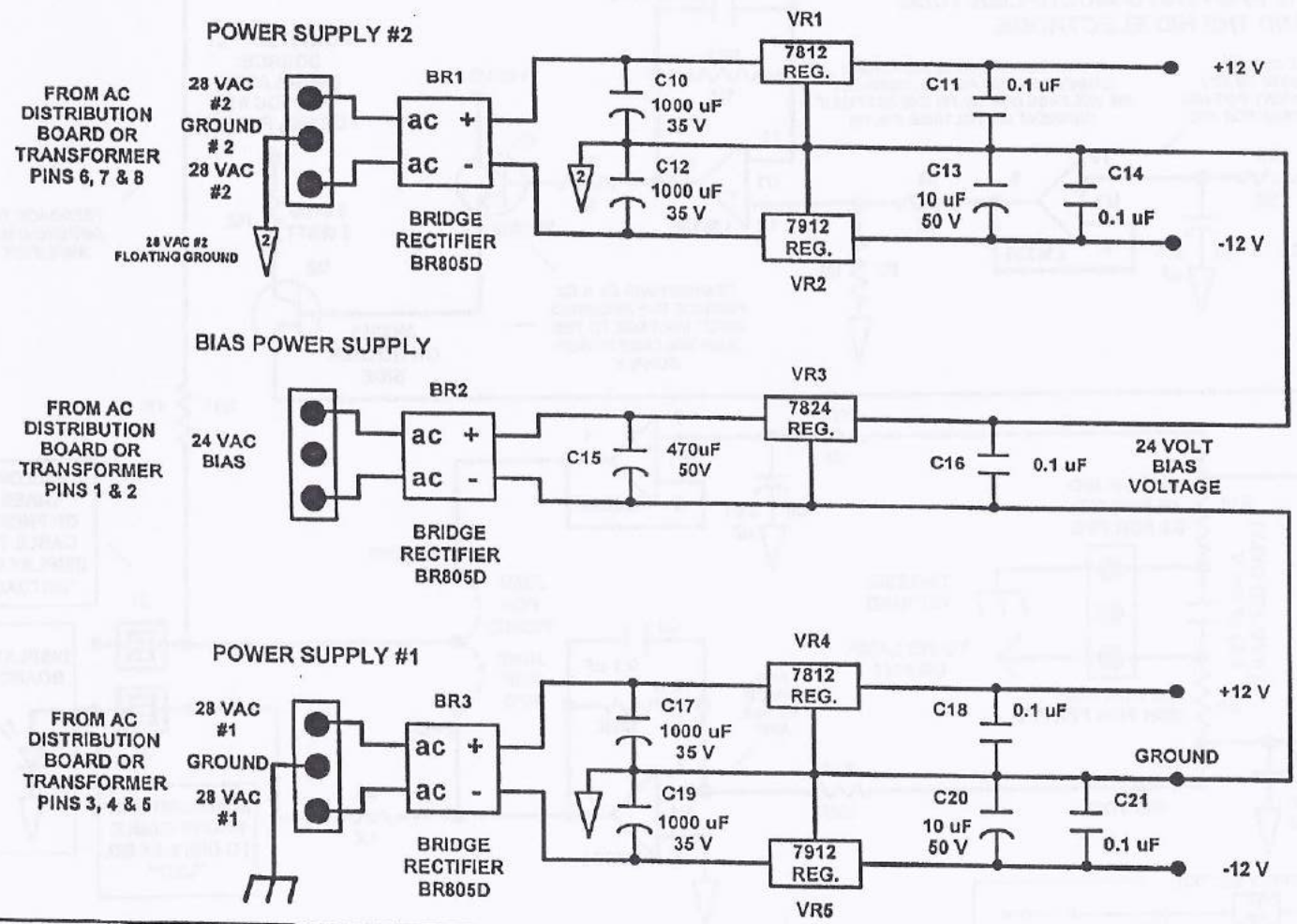

POWER SUPPLY #2 IS A +12 V AND -12 V SUPPLY BIASED 24 VOLTS ABOVE GROUND POTENTIAL BY VR3 OF THE BIAS POWER SUPPLY. THIS SUPPLY IS USED BY THE FID, PID, DELCD AND FPD DETECTOR AMPLIFIERS.

THE BIAS POWER SUPPLY MAINTAINS A 24 VOLT DC POTENTIAL BETWEEN GROUND #1 AND GROUND #2.

POWER SUPPLY #1 IS THE PRIMARY POWER SOURCE FOR ALL FUNCTIONS OF THE AMP BOARD AND ALSO PROVIDES +12 V AND -12 V TO THE A/D BOARD. ONLY THE TCD CIRCUIT REQUIRES AN ADDITIONAL AC VOLTAGE INPUT. SEE PAGE 2.

AMPLIFIER BOARD LAYOUT

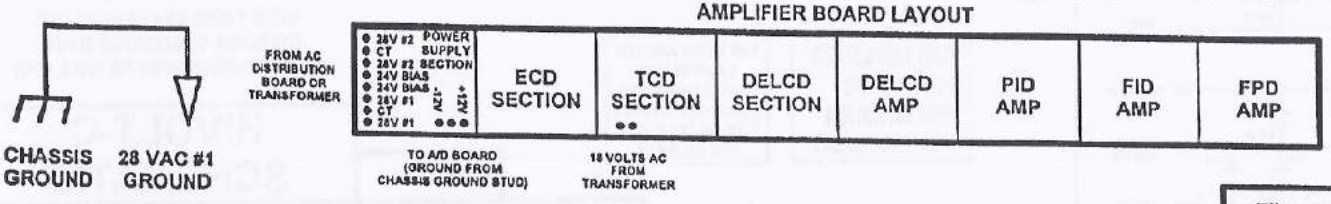

Page 1 of 7	**AMP-E SCHEMATIC**	
Filename: Amp-e1.tcw	Date: 12/20/97	By: R. Fenske
	Rev. Date:9/27/02	By: M. Watts

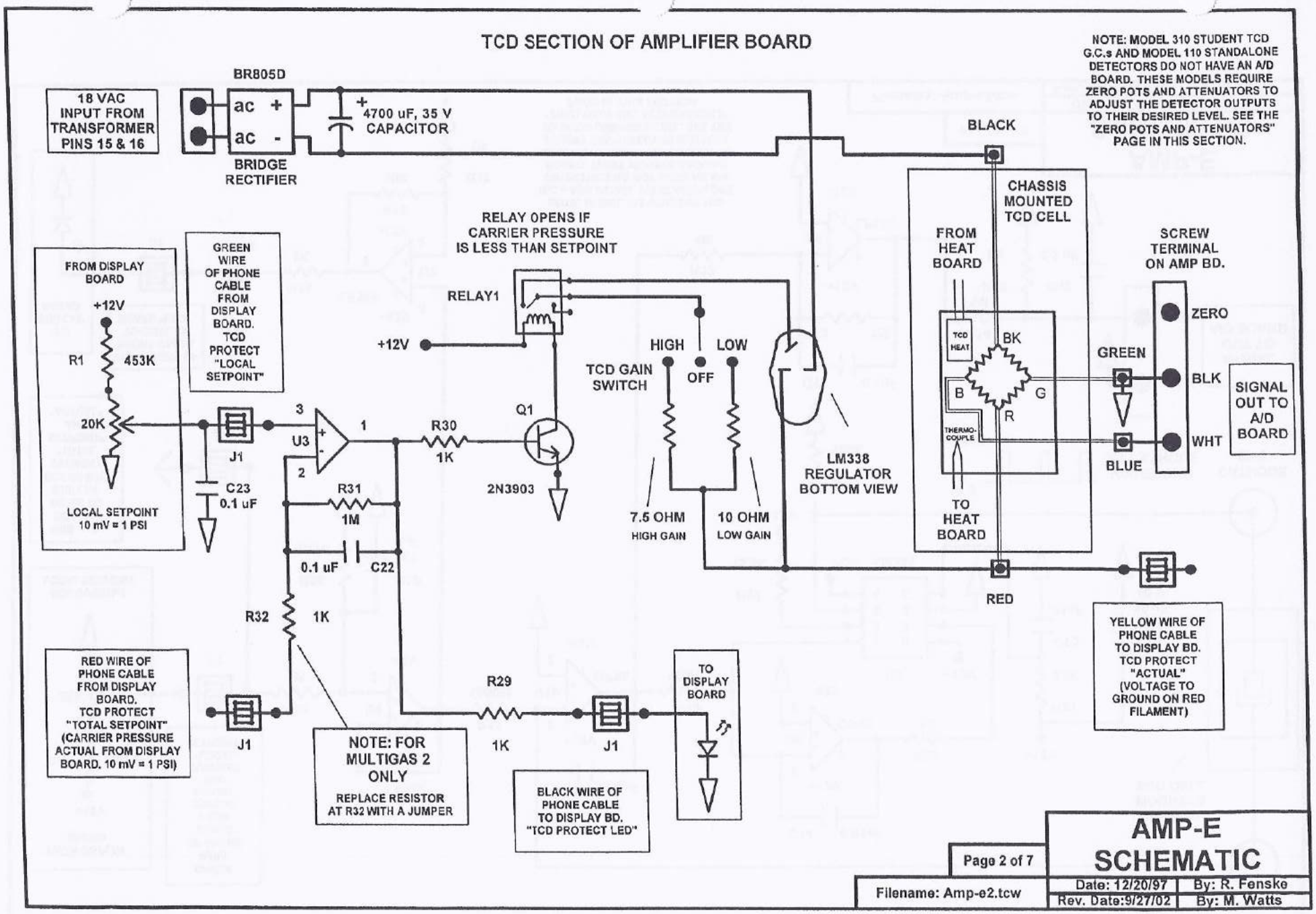
TCD SECTION OF AMPLIFIER BOARD
NOTE: MODEL 310 STUDENT TCD G.C.s AND MODEL 110 STANDALONE DETECTORS DO NOT HAVE AN A/D BOARD. THESE MODELS REQUIRE ZERO POTS AND ATTENUATORS TO ADJUST THE DETECTOR OUTPUTS TO THEIR DESIRED LEVEL. SEE THE "ZERO POTS AND ATTENUATORS" PAGE IN THIS SECTION.
18 VAC INPUT FROM TRANSFORMER PINS 15 & 16
BR805D
ac +
ac -
BRIDGE RECTIFIER
+ 4700 uF, 35 V CAPACITOR
BLACK
CHASSIS MOUNTED TCD CELL
FROM HEAT BOARD
TCD HEAT
BK
B
G
R
THERMO-COUPLE
TO HEAT BOARD
SCREW TERMINAL ON AMP BD.
ZERO
GREEN
BLK
WHT
BLUE
SIGNAL OUT TO A/D BOARD
RED
YELLOW WIRE OF PHONE CABLE TO DISPLAY BD. TCD PROTECT "ACTUAL" (VOLTAGE TO GROUND ON RED FILAMENT)
RELAY OPENS IF CARRIER PRESSURE IS LESS THAN SETPOINT
RELAY1
+12V
HIGH
LOW
OFF
TCD GAIN SWITCH
7.5 OHM HIGH GAIN
10 OHM LOW GAIN
LM338 REGULATOR BOTTOM VIEW
FROM DISPLAY BOARD
+12V
R1
453K
20K
LOCAL SETPOINT 10 mV = 1 PSI
GREEN WIRE OF PHONE CABLE FROM DISPLAY BOARD. TCD PROTECT "LOCAL SETPOINT"
J1
C23 0.1 uF
U3
3
2
1
R30 1K
Q1
2N3903
R31 1M
0.1 uF
C22
R32 1K
RED WIRE OF PHONE CABLE FROM DISPLAY BOARD. TCD PROTECT "TOTAL SETPOINT" (CARRIER PRESSURE ACTUAL FROM DISPLAY BOARD. 10 mV = 1 PSI)
J1
NOTE: FOR MULTIGAS 2 ONLY
REPLACE RESISTOR AT R32 WITH A JUMPER
R29
1K
J1
BLACK WIRE OF PHONE CABLE TO DISPLAY BD. "TCD PROTECT LED"
TO DISPLAY BOARD
Page 2 of 7
AMP-E SCHEMATIC
Filename: Amp-e2.tcw
Date: 12/20/97
By: R. Fenske
Rev. Date:9/27/02
By: M. Watts

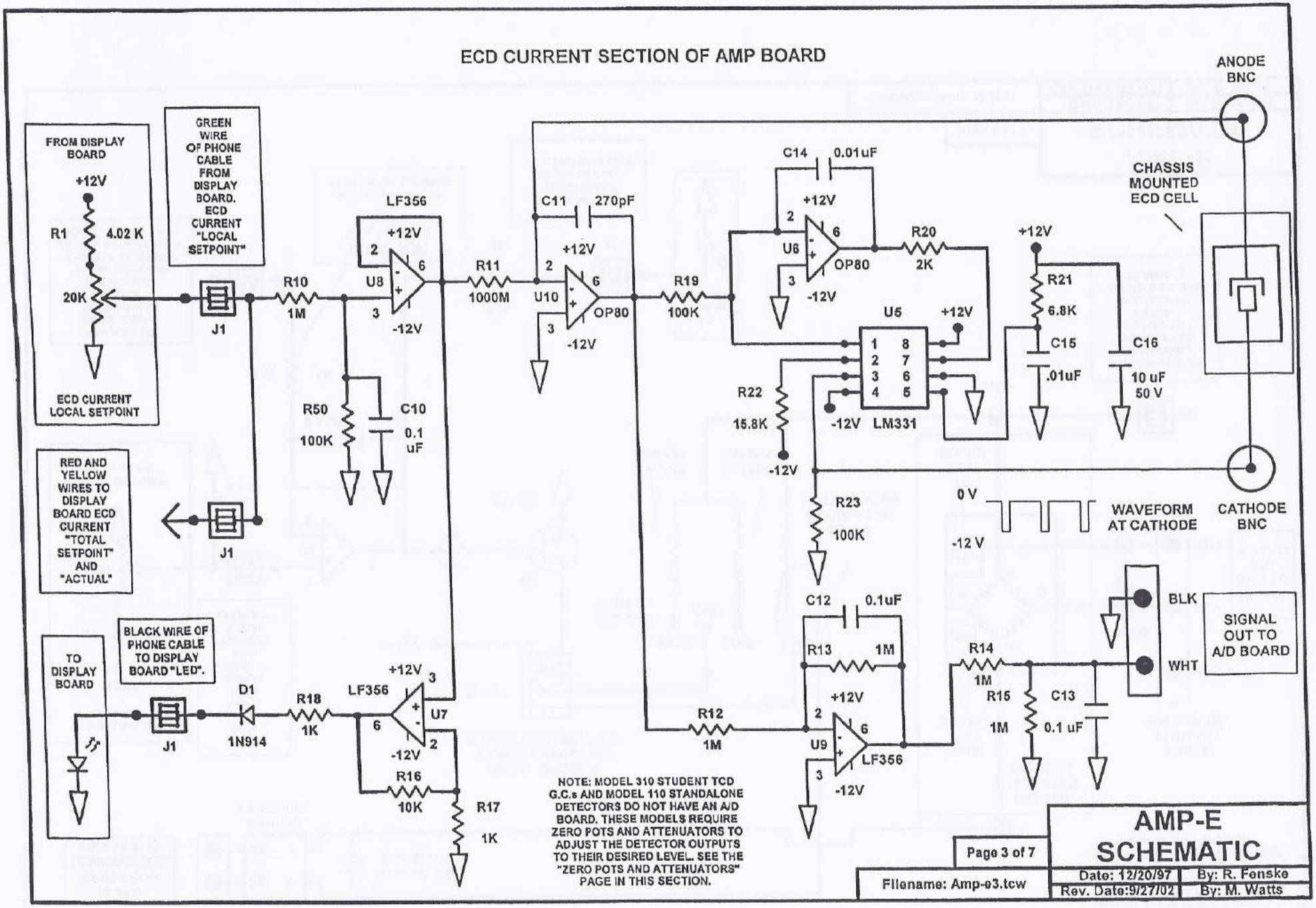
ECD CURRENT SECTION OF AMP BOARD
FROM DISPLAY BOARD
+12V
R1
4.02 K
20K
ECD CURRENT LOCAL SETPOINT
GREEN WIRE OF PHONE CABLE FROM DISPLAY BOARD. ECD CURRENT "LOCAL SETPOINT"
J1
R10
1M
LF356
+12V
U8
-12V
R50
100K
C10
0.1 uF
RED AND YELLOW WIRES TO DISPLAY BOARD ECD CURRENT "TOTAL SETPOINT" AND "ACTUAL"
J1
TO DISPLAY BOARD
BLACK WIRE OF PHONE CABLE TO DISPLAY BOARD "LED".
J1
D1
1N914
R18
1K
LF356
+12V
U7
-12V
R16
10K
R17
1K
R11
1000M
C11
270pF
+12V
U10
OP80
-12V
R19
100K
C14
0.01uF
+12V
U6
OP80
-12V
R20
2K
U5
+12V
LM331
-12V
R22
15.8K
-12V
R23
100K
+12V
R21
6.8K
C15
.01uF
C16
10 uF
50 V
ANODE BNC
CHASSIS MOUNTED ECD CELL
CATHODE BNC
0 V
-12 V
WAVEFORM AT CATHODE
C12
0.1uF
R13
1M
R12
1M
+12V
U9
LF356
-12V
R14
1M
R15
1M
C13
0.1 uF
BLK
WHT
SIGNAL OUT TO A/D BOARD
NOTE: MODEL 310 STUDENT TCD G.C.s AND MODEL 110 STANDALONE DETECTORS DO NOT HAVE AN A/D BOARD. THESE MODELS REQUIRE ZERO POTS AND ATTENUATORS TO ADJUST THE DETECTOR OUTPUTS TO THEIR DESIRED LEVEL. SEE THE "ZERO POTS AND ATTENUATORS" PAGE IN THIS SECTION.
Page 3 of 7
AMP-E SCHEMATIC
Filename: Amp-e3.tcw
Date: 12/20/97
By: R. Fenske
Rev. Date:9/27/02
By: M. Watts

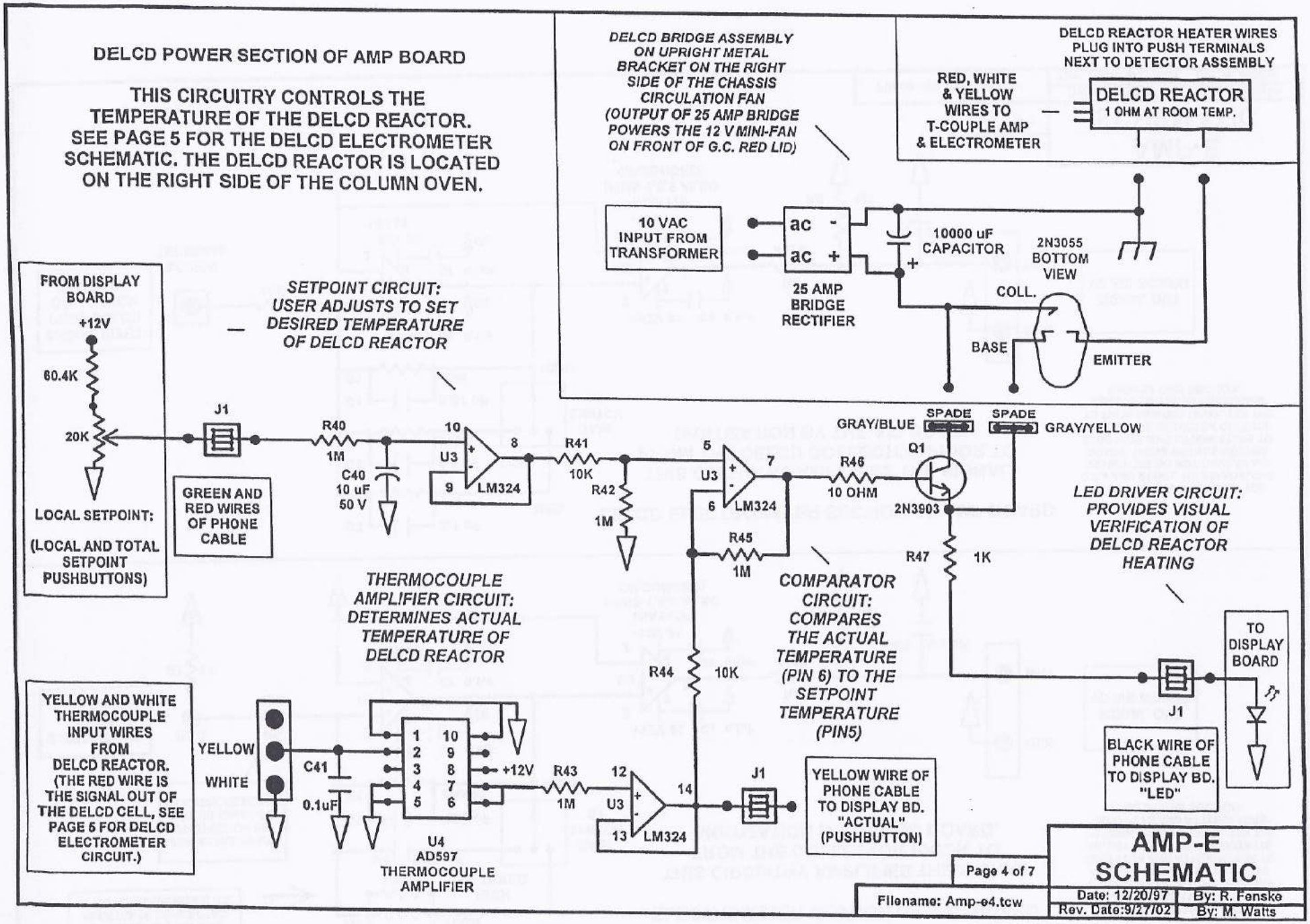
DELCD POWER SECTION OF AMP BOARD
THIS CIRCUITRY CONTROLS THE TEMPERATURE OF THE DELCD REACTOR. SEE PAGE 5 FOR THE DELCD ELECTROMETER SCHEMATIC. THE DELCD REACTOR IS LOCATED ON THE RIGHT SIDE OF THE COLUMN OVEN.
DELCD BRIDGE ASSEMBLY ON UPRIGHT METAL BRACKET ON THE RIGHT SIDE OF THE CHASSIS CIRCULATION FAN (OUTPUT OF 25 AMP BRIDGE POWERS THE 12 V MINI-FAN ON FRONT OF G.C. RED LID)
DELCD REACTOR HEATER WIRES PLUG INTO PUSH TERMINALS NEXT TO DETECTOR ASSEMBLY
RED, WHITE & YELLOW WIRES TO T-COUPLE AMP & ELECTROMETER
DELCD REACTOR
1 OHM AT ROOM TEMP.
10 VAC INPUT FROM TRANSFORMER
ac -
ac +
25 AMP BRIDGE RECTIFIER
10000 uF CAPACITOR
2N3055 BOTTOM VIEW
COLL.
BASE
EMITTER
FROM DISPLAY BOARD
+12V
60.4K
20K
LOCAL SETPOINT:
(LOCAL AND TOTAL SETPOINT PUSHBUTTONS)
SETPOINT CIRCUIT: USER ADJUSTS TO SET DESIRED TEMPERATURE OF DELCD REACTOR
J1
GREEN AND RED WIRES OF PHONE CABLE
R40
1M
C40
10 uF
50 V
U3
LM324
R41
10K
R42
1M
R45
1M
R46
10 OHM
Q1
2N3903
GRAY/BLUE
SPADE
SPADE
GRAY/YELLOW
R47
1K
LED DRIVER CIRCUIT: PROVIDES VISUAL VERIFICATION OF DELCD REACTOR HEATING
THERMOCOUPLE AMPLIFIER CIRCUIT: DETERMINES ACTUAL TEMPERATURE OF DELCD REACTOR
COMPARATOR CIRCUIT: COMPARES THE ACTUAL TEMPERATURE (PIN 6) TO THE SETPOINT TEMPERATURE (PIN5)
R44
10K
TO DISPLAY BOARD
J1
BLACK WIRE OF PHONE CABLE TO DISPLAY BD. "LED"
YELLOW AND WHITE THERMOCOUPLE INPUT WIRES FROM DELCD REACTOR. (THE RED WIRE IS THE SIGNAL OUT OF THE DELCD CELL, SEE PAGE 5 FOR DELCD ELECTROMETER CIRCUIT.)
YELLOW
WHITE
C41
0.1uF
+12V
R43
1M
U4
AD597
THERMOCOUPLE AMPLIFIER
J1
YELLOW WIRE OF PHONE CABLE TO DISPLAY BD. "ACTUAL" (PUSHBUTTON)
Page 4 of 7
AMP-E SCHEMATIC
Filename: Amp-e4.tcw
Date: 12/20/97
By: R. Fenske
Rev. Date:9/27/02
By: M. Watts

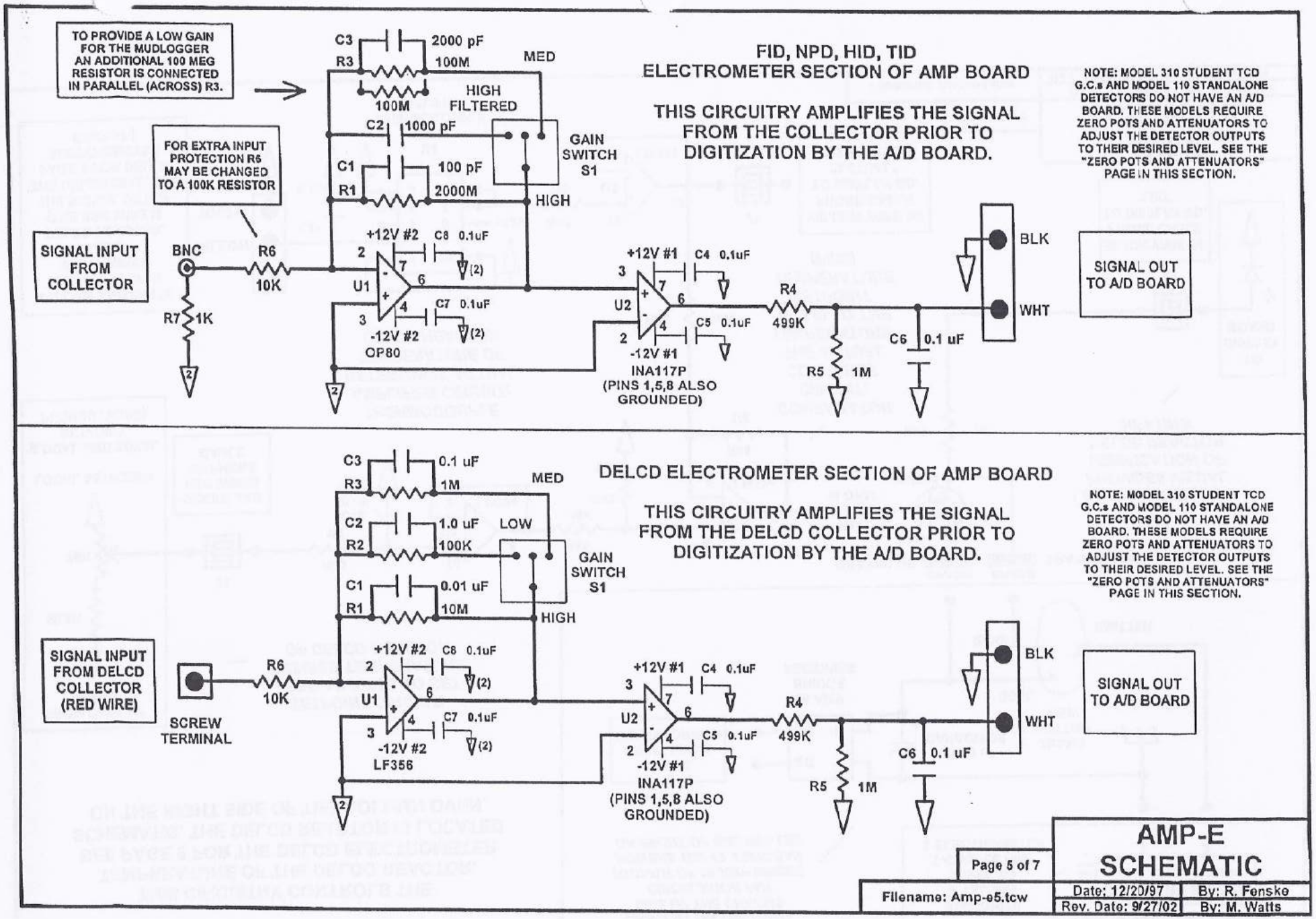
TO PROVIDE A LOW GAIN FOR THE MUDLOGGER AN ADDITIONAL 100 MEG RESISTOR IS CONNECTED IN PARALLEL (ACROSS) R3.
FOR EXTRA INPUT PROTECTION R6 MAY BE CHANGED TO A 100K RESISTOR
SIGNAL INPUT FROM COLLECTOR
BNC
R6
10K
R7
1K
C3
2000 pF
R3
100M
100M
MED
HIGH FILTERED
C2
1000 pF
C1
100 pF
R1
2000M
HIGH
GAIN SWITCH S1
+12V #2
C8 0.1uF
U1
C7 0.1uF
-12V #2
OP80
+12V #1
C4 0.1uF
U2
C5 0.1uF
-12V #1
INA117P
(PINS 1,5,8 ALSO GROUNDED)
R4
499K
R5
1M
C6
0.1 uF
BLK
WHT
SIGNAL OUT TO A/D BOARD
FID, NPD, HID, TID
ELECTROMETER SECTION OF AMP BOARD
THIS CIRCUITRY AMPLIFIES THE SIGNAL FROM THE COLLECTOR PRIOR TO DIGITIZATION BY THE A/D BOARD.
NOTE: MODEL 310 STUDENT TCD G.C.s AND MODEL 110 STANDALONE DETECTORS DO NOT HAVE AN A/D BOARD. THESE MODELS REQUIRE ZERO POTS AND ATTENUATORS TO ADJUST THE DETECTOR OUTPUTS TO THEIR DESIRED LEVEL. SEE THE "ZERO POTS AND ATTENUATORS" PAGE IN THIS SECTION.
SIGNAL INPUT FROM DELCD COLLECTOR (RED WIRE)
SCREW TERMINAL
R6
10K
C3
0.1 uF
R3
1M
MED
C2
1.0 uF
R2
100K
LOW
C1
0.01 uF
R1
10M
HIGH
GAIN SWITCH S1
+12V #2
C8 0.1uF
U1
C7 0.1uF
-12V #2
LF356
+12V #1
C4 0.1uF
U2
C5 0.1uF
-12V #1
INA117P
(PINS 1,5,8 ALSO GROUNDED)
R4
499K
R5
1M
C6
0.1 uF
BLK
WHT
SIGNAL OUT TO A/D BOARD
DELCD ELECTROMETER SECTION OF AMP BOARD
THIS CIRCUITRY AMPLIFIES THE SIGNAL FROM THE DELCD COLLECTOR PRIOR TO DIGITIZATION BY THE A/D BOARD.
NOTE: MODEL 310 STUDENT TCD G.C.s AND MODEL 110 STANDALONE DETECTORS DO NOT HAVE AN A/D BOARD. THESE MODELS REQUIRE ZERO POTS AND ATTENUATORS TO ADJUST THE DETECTOR OUTPUTS TO THEIR DESIRED LEVEL. SEE THE "ZERO POTS AND ATTENUATORS" PAGE IN THIS SECTION.
Page 5 of 7
AMP-E SCHEMATIC
Filename: Amp-e5.tcw
Date: 12/20/97
By: R. Fenske
Rev. Date: 9/27/02
By: M. Watts

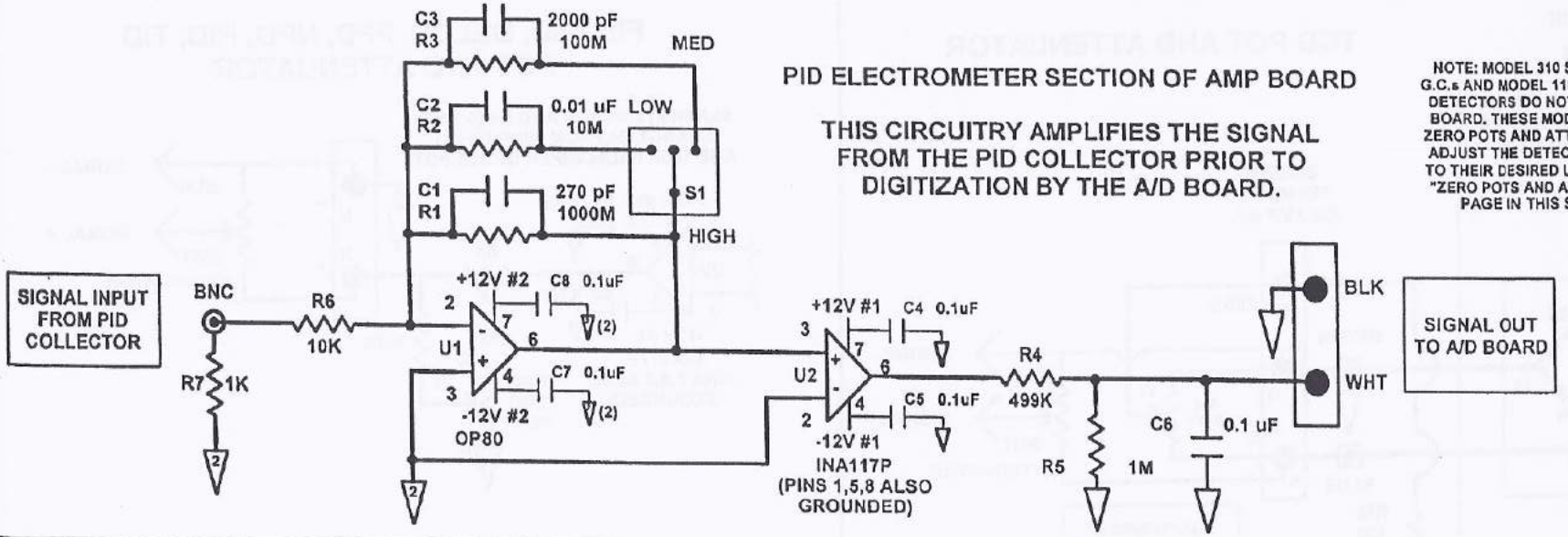

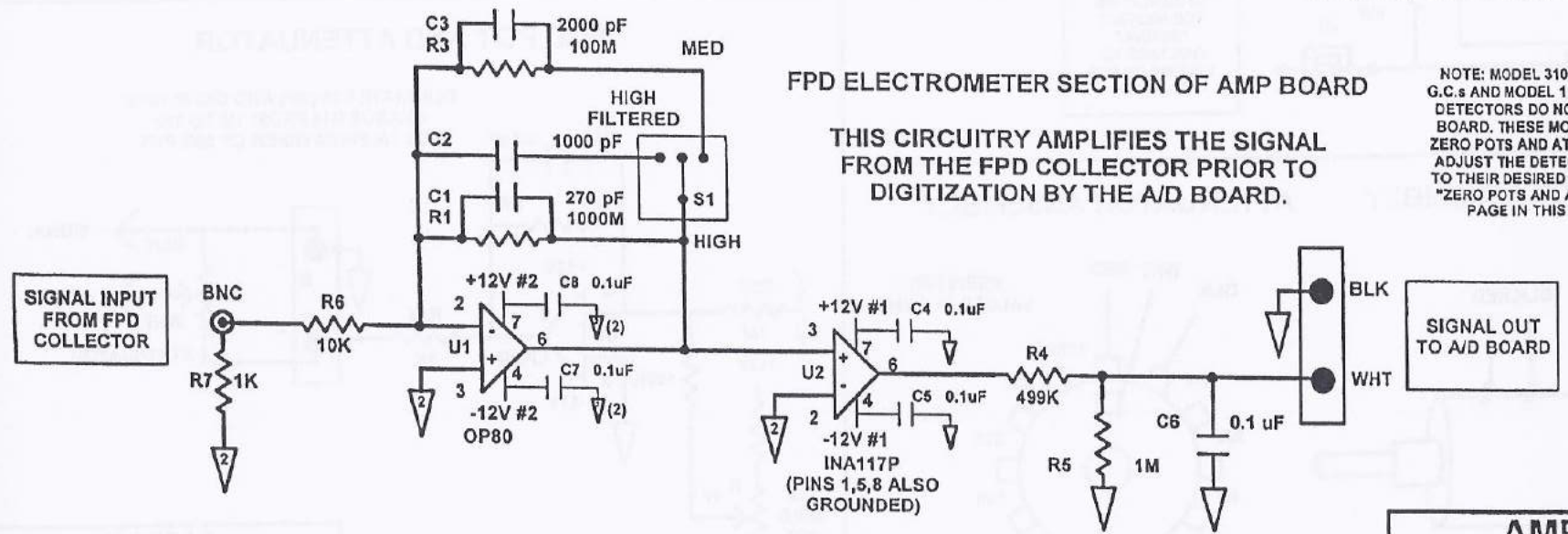

Page 6 of 7	AMP-E SCHEMATIC	
Filename: Amp-e6.tcw	Date: 12/20/97	By: R. Fenske
	Rev. Date:9/27/02	By: M. Watts

TCD POT AND ATTENUATOR

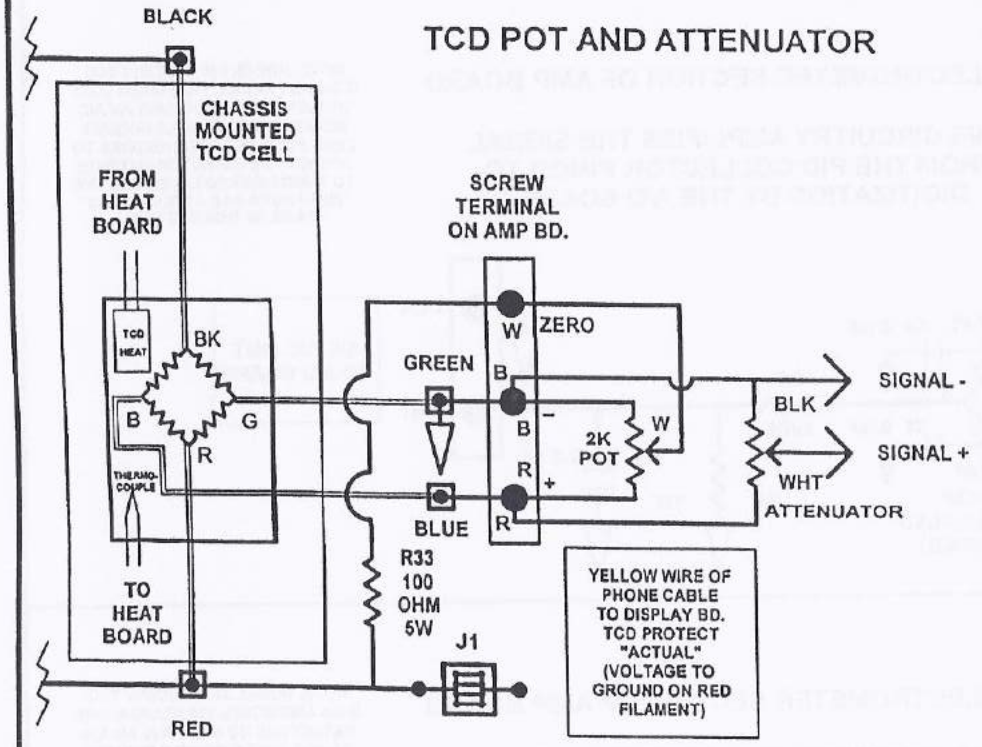

FID, PID, DELCD, FPD, NPD, HID, TID POT AND ATTENUATOR

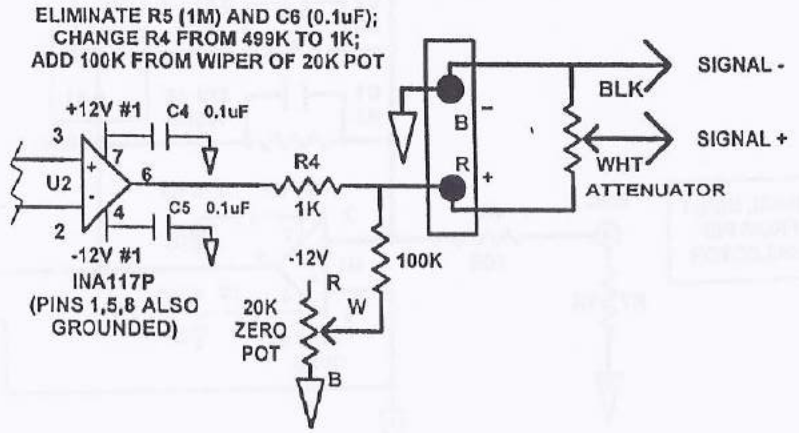

ECD POT AND ATTENUATOR

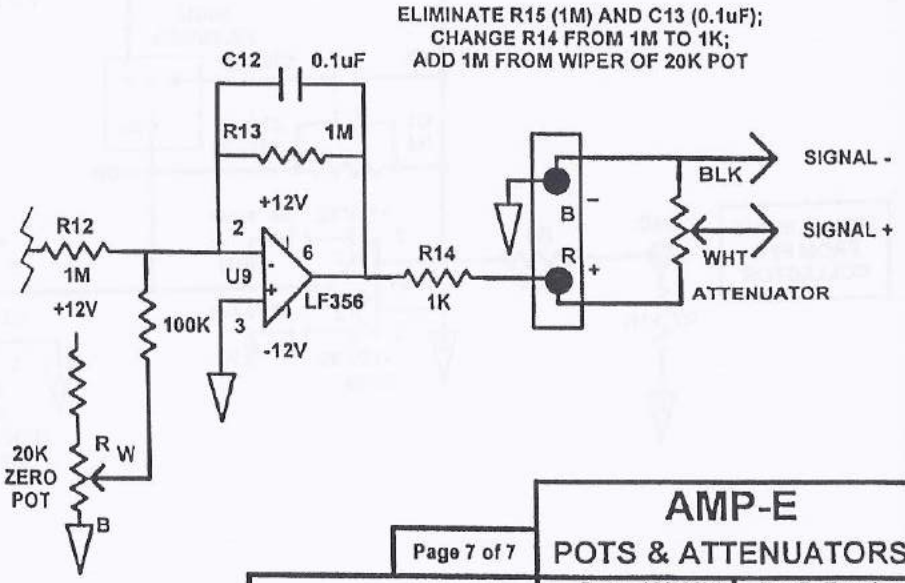

ZERO POT ASSEMBLY

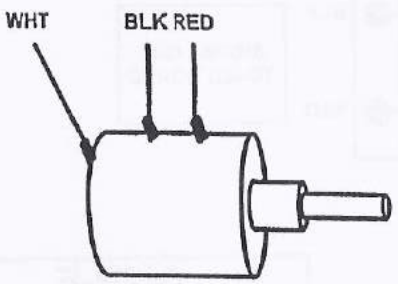

TCD: 2K POT
ALL OTHERS: 20K POT

ATTENUATOR ASSEMBLY

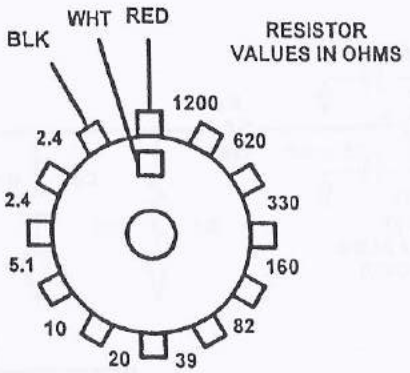

Page 7 of 7	**AMP-E** POTS & ATTENUATORS	
Filename: Amp-e7.tcw	Date: 12/20/97	By: R. Fenske
	Rev. Date:9/27/02	By: M. Watts

ACCESSORY RELAY BOARD (1-4 RELAYS) WITH EXTERNAL CONNECTOR

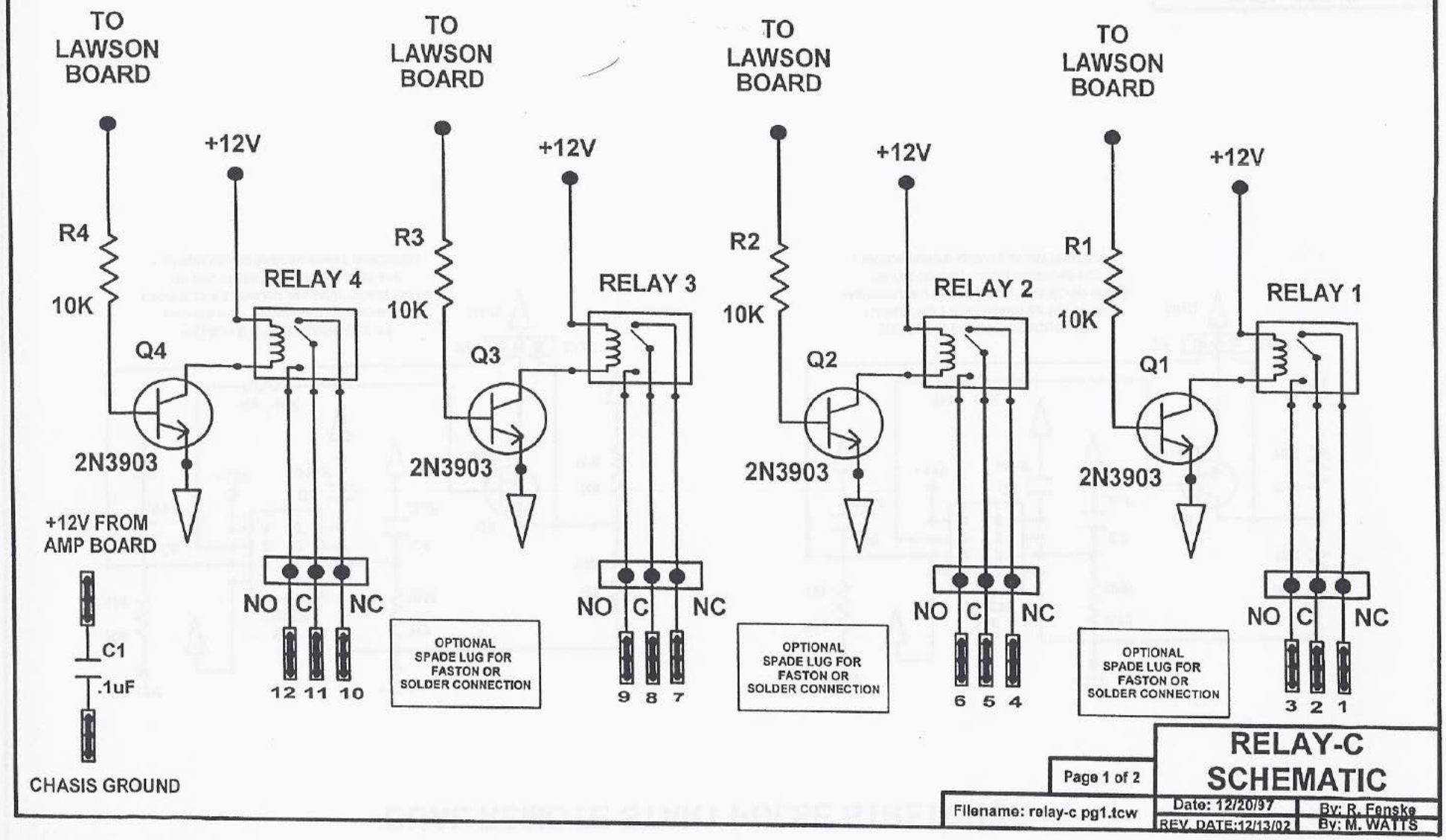

Page 1 of 2	RELAY-C SCHEMATIC
Filename: relay-c pg1.tcw	Date: 12/20/97 By: R. Fenske
	REV. DATE:12/13/02 By: M. WATTS

DUAL REMOTE START PULSE STRETCHER

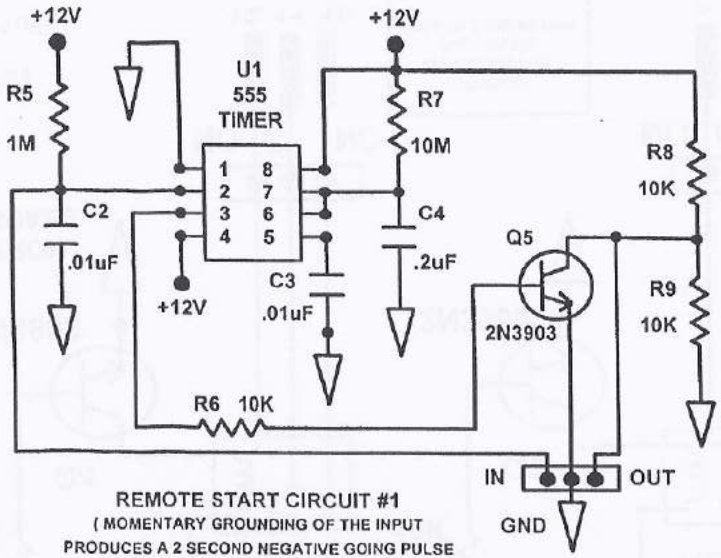

REMOTE START CIRCUIT #1
(MOMENTARY GROUNDING OF THE INPUT PRODUCES A 2 SECOND NEGATIVE GOING PULSE ON THE OUTPUT WHICH TRIGGERS THE LAWSON BOARD REMOTE START FUNCTION.)

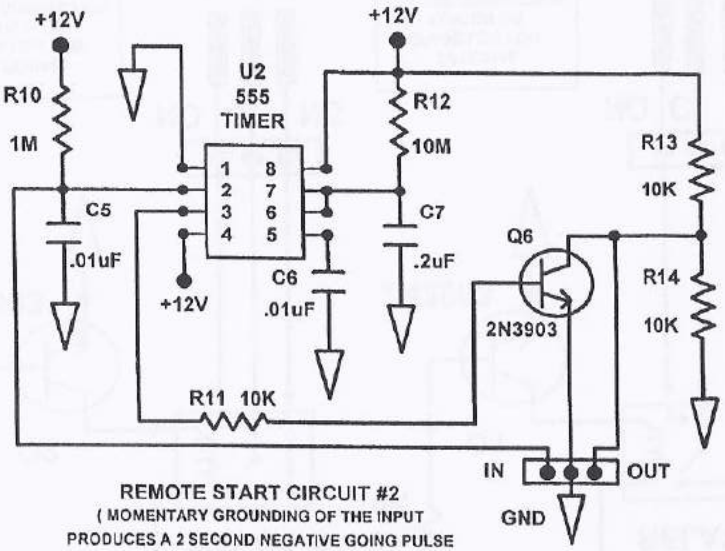

REMOTE START CIRCUIT #2
(MOMENTARY GROUNDING OF THE INPUT PRODUCES A 2 SECOND NEGATIVE GOING PULSE ON THE OUTPUT WHICH TRIGGERS THE LAWSON BOARD REMOTE START FUNCTION.)

Page 2 of 2	RELAY-C SCHEMATIC	
Filename: relay-c pg2.tcw	Date: 12/16/02	By: M. Watts