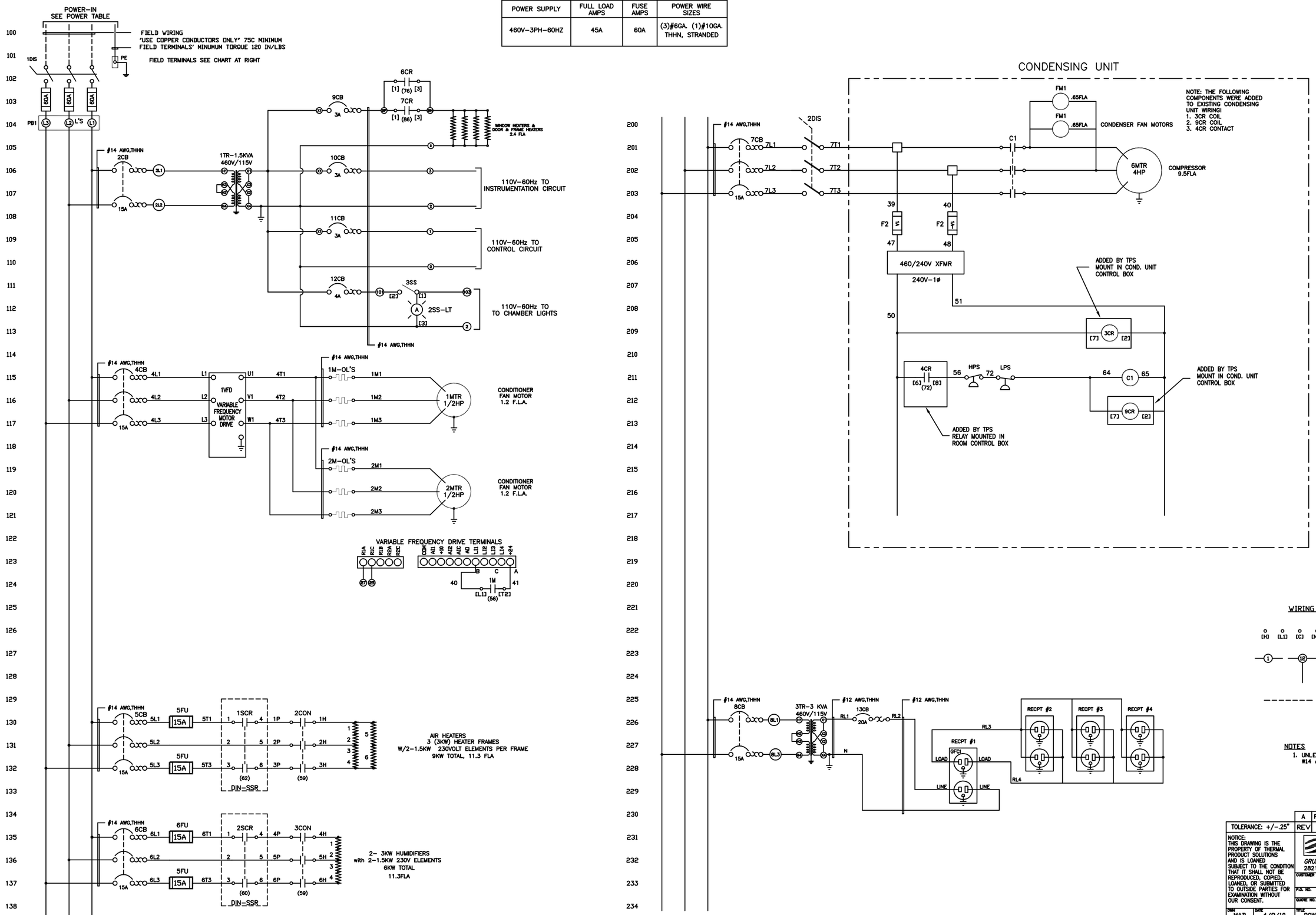POWER TABLE			
POWER SUPPLY	FULL LOAD AMPS	FUSE AMPS	POWER WIRE SIZES
460V-3PH-60HZ	45A	60A	(3)#6GA. (1)#10GA. THHN, STRANDED