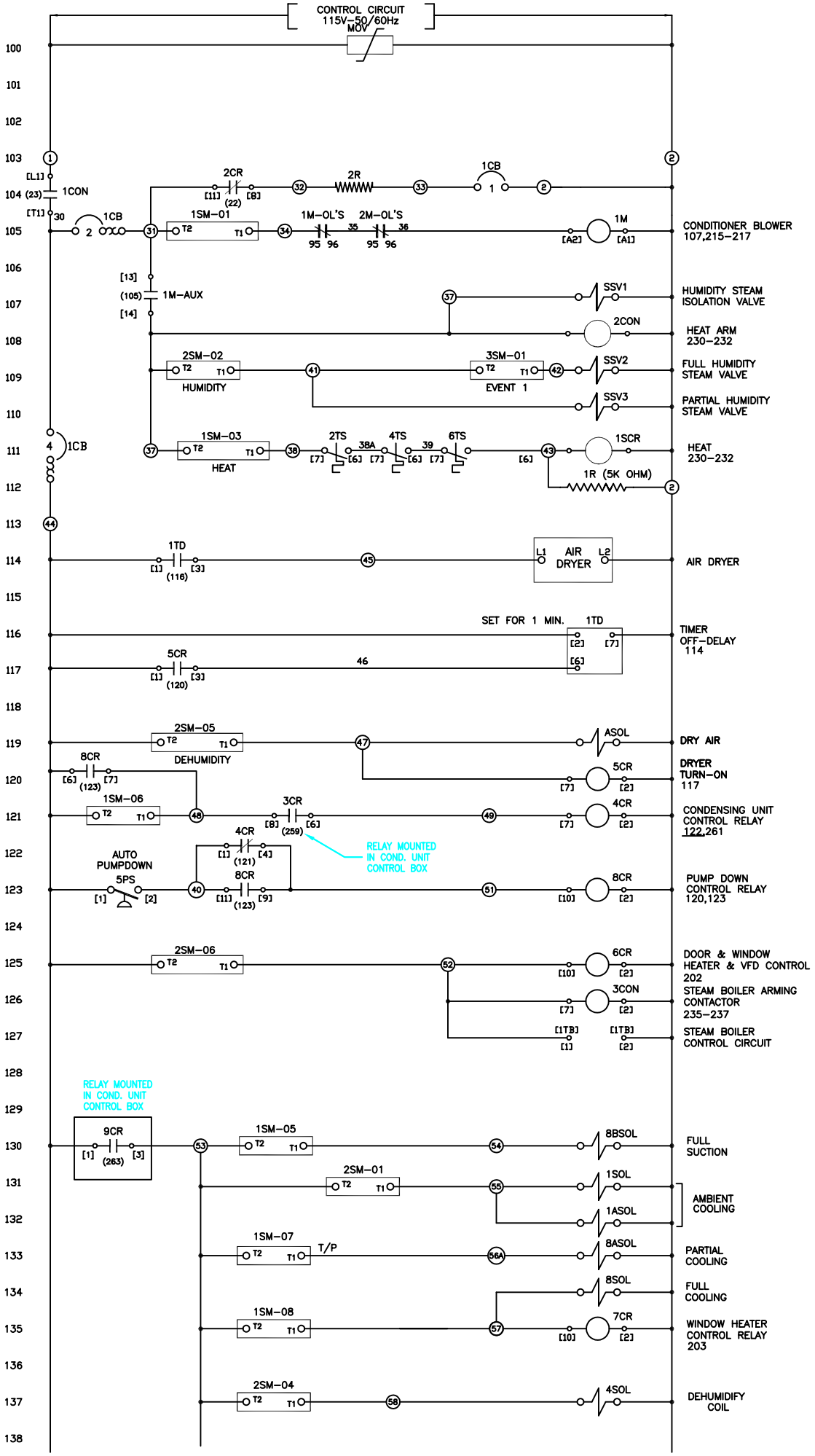

NOTES

1. UNLESS OTHERWISE SPECIFIED, ALL WIRES ARE #16A.W.G. & TYPE TW , EXCEPT WIRES AS NOTED.
2. SHIELDED CABLES & OTHER LOW DC VOLTAGE WIRES SUCH AS SENSORS, THERMOCOUPLES, #20 A.W.G. WIRES TO & FROM TRANSMITTERS OR TRANSDUCERS ARE CONTINUOUS, WIRED FROM ONE DEVICE TO ANOTHER DEVICE AND DOES NOT TERMINATE ON THE TERMINAL BLOCK.

WIRING SYMBOLS

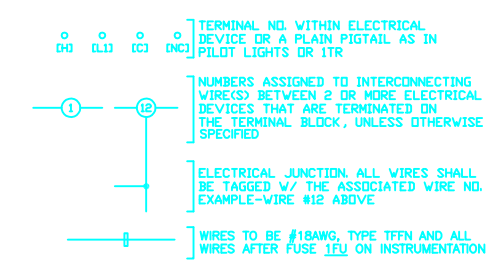

REV	DESCRIPTION	BY	DATE
A	UODATED AFTER TEST	MAB	2/16/11

TOLERANCE: +/-.25"

NOTICE:
THIS DRAWING IS THE PROPERTY OF THERMAL PRODUCT SOLUTIONS AND IS LOANED SUBJECT TO THE CONDITION THAT IT SHALL NOT BE REPRODUCED, COPIED, LOANED, OR SUBMITTED TO OUTSIDE PARTIES FOR EXAMINATION WITHOUT OUR CONSENT.

TPS
Thermal Product Solutions
GRUENBERG • LUNAIRE • TENNEY • BLUE M • LINDBERG
2821 OLD ROUTE 15, NEW COLUMBIA, PA, 17856, U.S.A.

CUSTOMER: GENERAL ELECTRIC
P.O. NO.
QUOTE NO.
SCALE: FULL
SHEET: 1 OF 1
DWG NO: 72482D801
REV: A
DRAWN: MAB
DATE: 9/20/10
APP
DATE
TITLE: CONTROL SCH.
MODEL: WITR-32185-VTV-G-INS
JOB NO: 72482