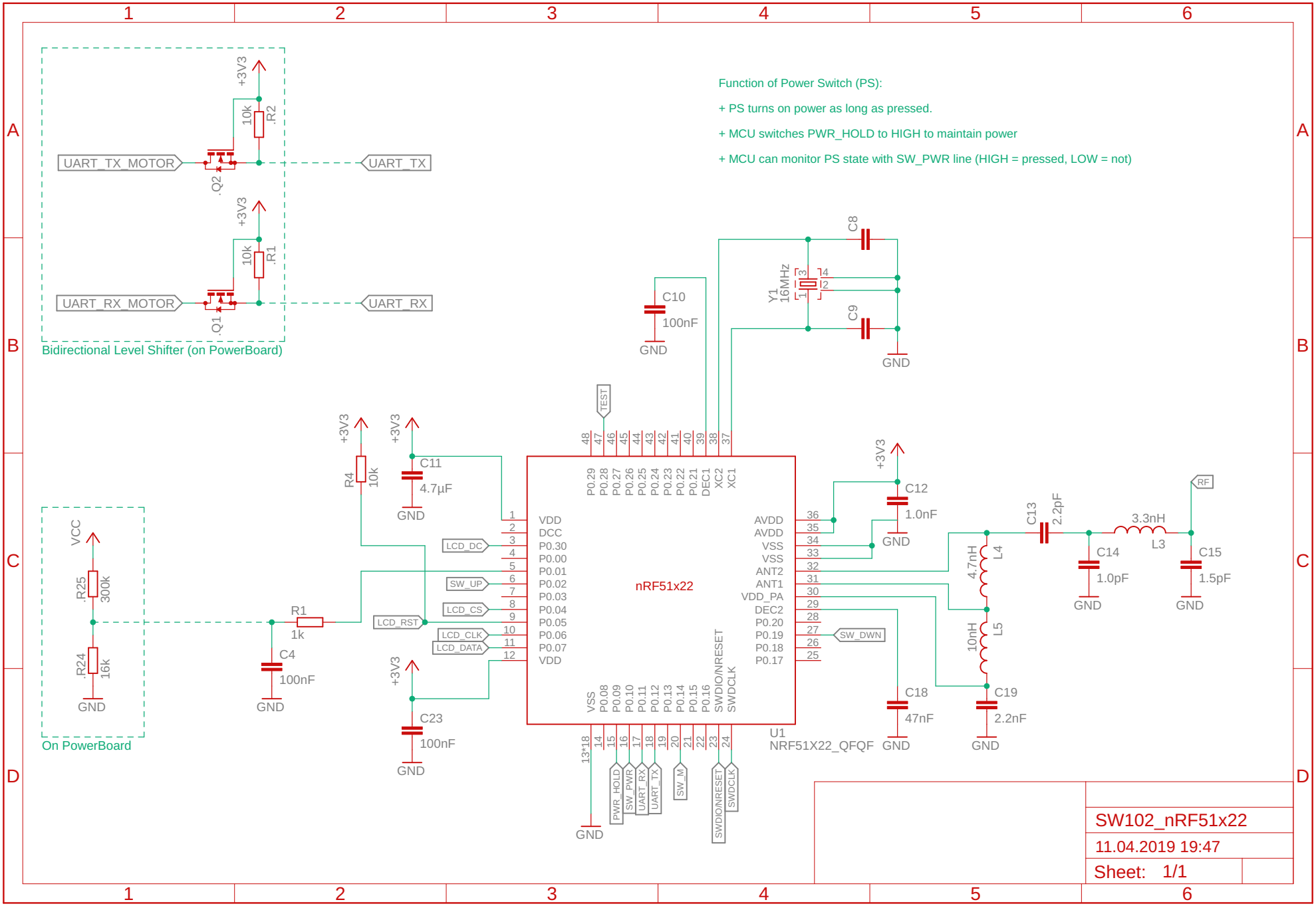
Function of Power Switch (PS):
+ PS turns on power as long as pressed.
+ MCU switches PWR_HOLD to HIGH to maintain power
+ MCU can monitor PS state with SW_PWR line (HIGH = pressed, LOW = not)
Bidirectional Level Shifter (on PowerBoard)
UART_TX_MOTOR
UART_TX
UART_RX_MOTOR
UART_RX
+3V3
10k
.R2
.R1
.Q2
.Q1
On PowerBoard
VCC
.R25
300k
.R24
16k
GND
R1
1k
C4
100nF
R4
10k
C11
4.7µF
C23
100nF
C10
100nF
Y1
16MHz
C8
C9
TEST
LCD_DC
SW_UP
LCD_CS
LCD_RST
LCD_CLK
LCD_DATA
nRF51x22
VDD
DCC
P0.30
P0.00
P0.01
P0.02
P0.03
P0.04
P0.05
P0.06
P0.07
VDD
P0.29
P0.28
P0.27
P0.26
P0.25
P0.24
P0.23
P0.22
P0.21
DEC1
XC2
XC1
AVDD
AVDD
VSS
VSS
ANT2
ANT1
VDD_PA
DEC2
P0.20
P0.19
P0.18
P0.17
SW_DWN
VSS
P0.08
P0.09
P0.10
P0.11
P0.12
P0.13
P0.14
P0.15
P0.16
SWDIO/NRESET
SWDCLK
13*18
PWR_HOLD
SW_PWR
UART_RX
UART_TX
SW_M
SWDIO/NRESET
SWDCLK
U1
NRF51X22_QFQF
C12
1.0nF
C18
47nF
C19
2.2nF
L4
4.7nH
L5
10nH
C13
2.2pF
C14
1.0pF
L3
3.3nH
C15
1.5pF
RF
SW102_nRF51x22
11.04.2019 19:47
Sheet: 1/1