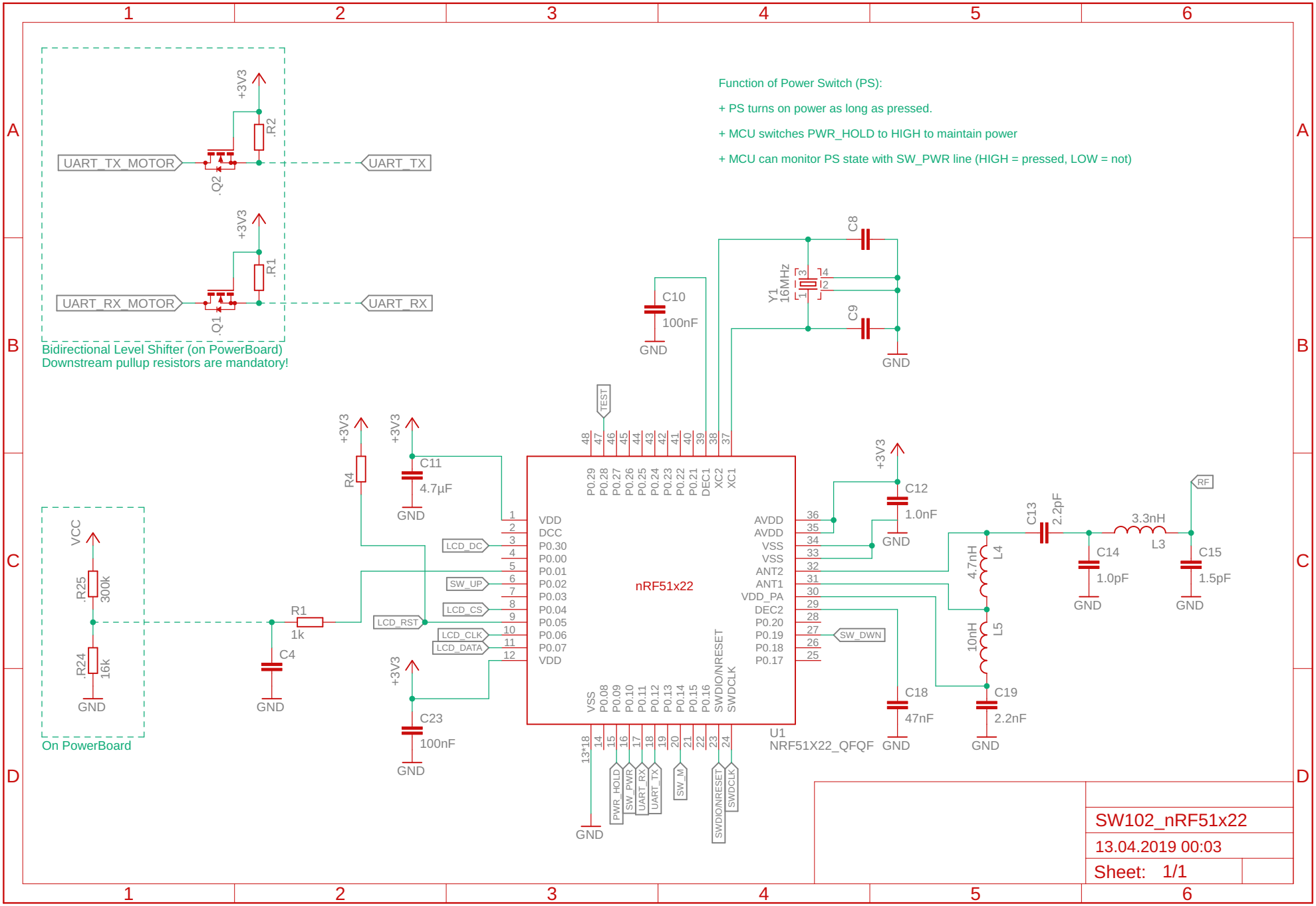
Function of Power Switch (PS):
+ PS turns on power as long as pressed.
+ MCU switches PWR_HOLD to HIGH to maintain power
+ MCU can monitor PS state with SW_PWR line (HIGH = pressed, LOW = not)
+3V3
.R2
UART_TX_MOTOR
UART_TX
.Q2
.R1
UART_RX_MOTOR
UART_RX
.Q1
Bidirectional Level Shifter (on PowerBoard)
Downstream pullup resistors are mandatory!
C8
C9
Y1
16MHz
C10
100nF
GND
TEST
R4
C11
4.7µF
C12
1.0nF
C13
2.2pF
3.3nH
L3
RF
C14
1.0pF
C15
1.5pF
4.7nH
L4
10nH
L5
C18
47nF
C19
2.2nF
VCC
.R25
300k
.R24
16k
R1
1k
C4
C23
100nF
LCD_DC
SW_UP
LCD_CS
LCD_RST
LCD_CLK
LCD_DATA
SW_DWN
nRF51x22
U1
NRF51X22_QFQF
VDD
DCC
P0.30
P0.00
P0.01
P0.02
P0.03
P0.04
P0.05
P0.06
P0.07
AVDD
VSS
ANT2
ANT1
VDD_PA
DEC2
P0.20
P0.19
P0.18
P0.17
P0.29
P0.28
P0.27
P0.26
P0.25
P0.24
P0.23
P0.22
P0.21
DEC1
XC2
XC1
P0.08
P0.09
P0.10
P0.11
P0.12
P0.13
P0.14
P0.15
P0.16
SWDIO/NRESET
SWDCLK
13*18
PWR_HOLD
SW_PWR
UART_RX
UART_TX
SW_M
On PowerBoard
SW102_nRF51x22
13.04.2019 00:03
Sheet: 1/1