REV	DATE	BY	CHANGE
A	10-March-2012	BBT	Initial release
A1	1-MAY-2012	BBT	buttons are re-arranged with diffrent GPIO's
A2	25-July-2012	BBT	stand-alone backlight circuit added. GPIO3_19 is used for User LED, GPIO1_18 is used for Backlight and GPIO0_3 is used for Enter button

This work is licensed under the Creative Commons Attribution-Share Alike 3.0 Unported License. To view a copy of this license, visit http://creativecommons.org/licenses/by-sa/3.0/ or send a letter to Creative Commons, 171 Second Street, Suite 300, San Francisco, California, 94105, USA.

All derivative works are to be attributed to CircuitCo LLC .

For more information, see http://creativecommons.org/license/results-one?license_code=by-sa

This work is licensed under the Creative Commons Attribution-Share Alike 3.0 Unported License. All derivative works are to be attributed to CircuitCo LLC.

beagleboardtoys is owned by CircuitCo LLC.

beagleboardtoys.com

1380 Presidential Dr.
#100
Richardson, TX 75081
www.beagleboardtoys.com

Title	BeagleBone LCD3 Cape COVER PAGE	
Size B	Document Number BB-BONE-LCD3-01	Rev A2
Date: Tuesday, September 04, 2012	Sheet 1 of 4	

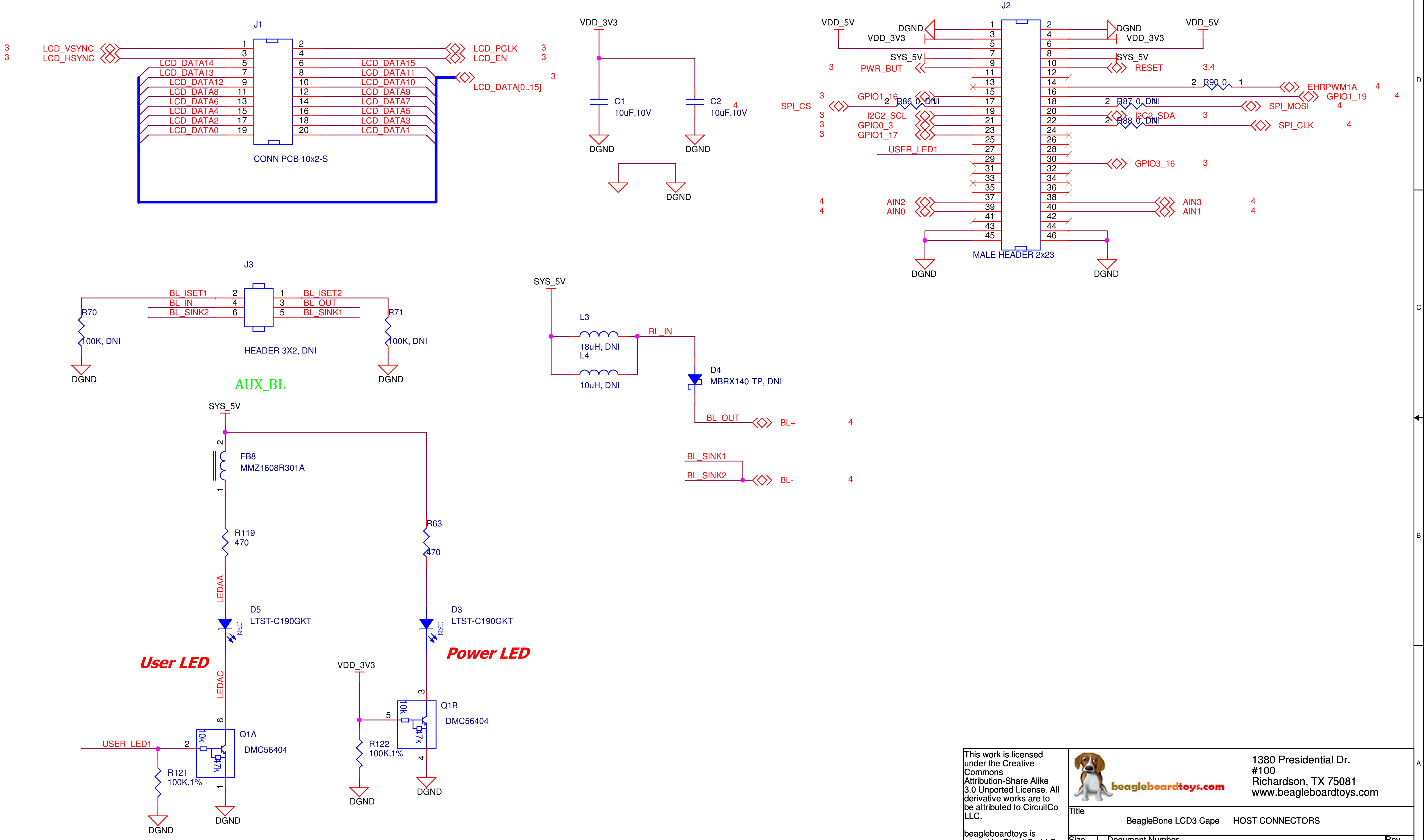
J1
CONN PCB 10x2-S
LCD_VSYNC
LCD_HSYNC
LCD_DATA14
LCD_DATA13
LCD_DATA12
LCD_DATA8
LCD_DATA6
LCD_DATA4
LCD_DATA2
LCD_DATA0
LCD_PCLK
LCD_EN
LCD_DATA15
LCD_DATA11
LCD_DATA10
LCD_DATA9
LCD_DATA7
LCD_DATA5
LCD_DATA3
LCD_DATA1
LCD_DATA[0..15]
VDD_3V3
C1
10uF,10V
C2
10uF,10V
DGND
J2
MALE HEADER 2x23
VDD_5V
VDD_3V3
SYS_5V
PWR_BUT
RESET
SPI_CS
GPIO1_16
R86 0, DNI
I2C2_SCL
GPIO0_3
GPIO1_17
USER_LED1
R90 0
EHRPWM1A
GPIO1_19
R87 0, DNI
SPI_MOSI
R88 0, DNI
I2C2_SDA
SPI_CLK
GPIO3_16
AIN2
AIN0
AIN3
AIN1
J3
HEADER 3X2, DNI
BL_ISET1
BL_IN
BL_SINK2
BL_ISET2
BL_OUT
BL_SINK1
R70
100K, DNI
R71
100K, DNI
AUX_BL
SYS_5V
L3
18uH, DNI
L4
10uH, DNI
BL_IN
D4
MBRX140-TP, DNI
BL_OUT
BL+
BL_SINK1
BL_SINK2
BL-
FB8
MMZ1608R301A
R119
470
R63
470
LEDAA
LEDAC
D5
LTST-C190GKT
D3
LTST-C190GKT
GRN
User LED
Power LED
Q1A
DMC56404
Q1B
DMC56404
10k
47k
R121
100K,1%
R122
100K,1%
USER_LED1
VDD_3V3

This work is licensed under the Creative Commons Attribution-Share Alike 3.0 Unported License. All derivative works are to be attributed to CircuitCo LLC.

beagleboardtoys is owned by CircuitCo LLC.

beagleboardtoys.com

1380 Presidential Dr.
#100
Richardson, TX 75081
www.beagleboardtoys.com

Title	BeagleBone LCD3 Cape HOST CONNECTORS	
Size B	Document Number BB-BONE-LCD3-01	Rev A2
Date: Tuesday, September 04, 2012	Sheet 2 of 4	

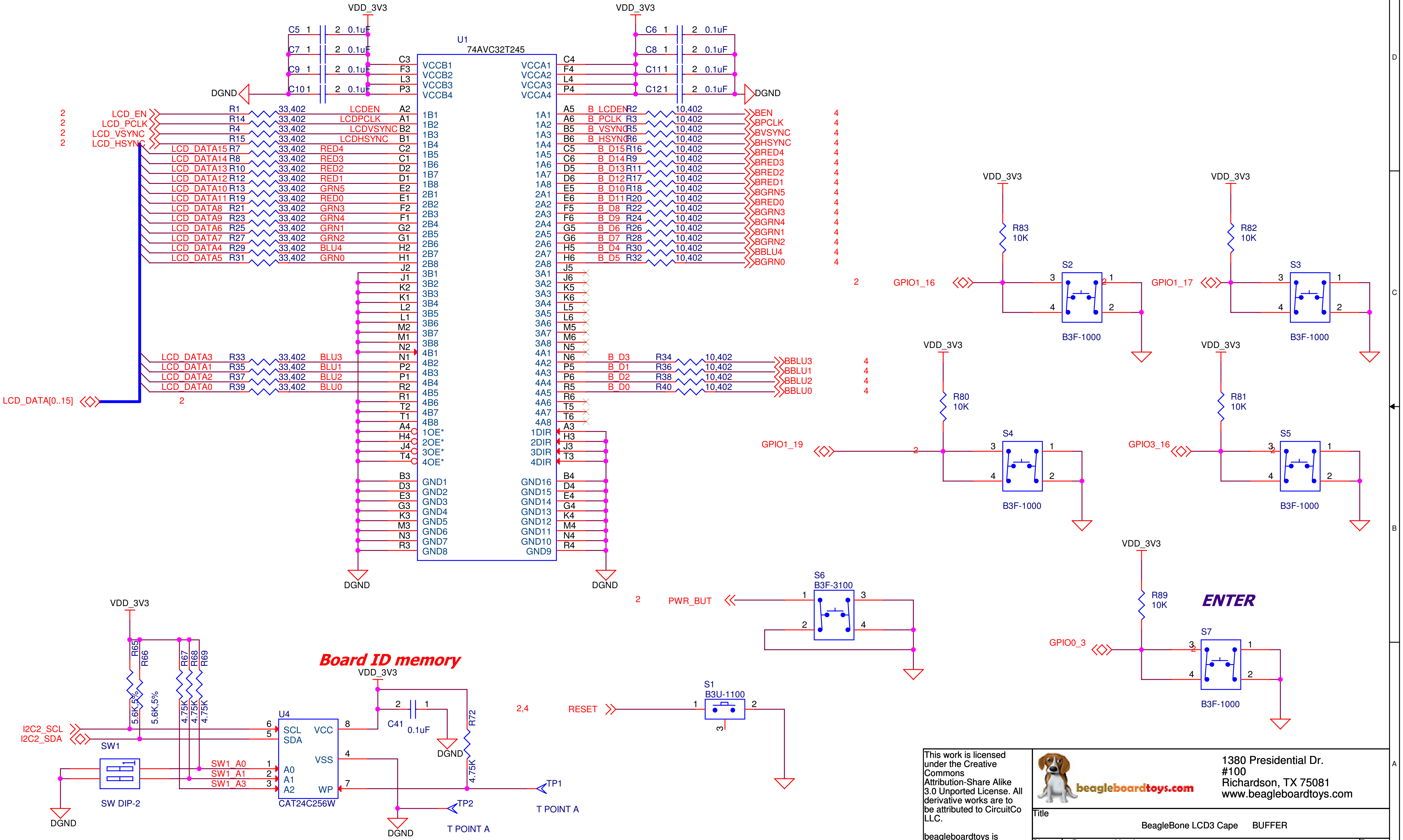
VDD_3V3
C5 1 2 0.1uF
C7 1 2 0.1uF
C9 1 2 0.1uF
C10 1 2 0.1uF
DGND
C6 1 2 0.1uF
C8 1 2 0.1uF
C11 1 2 0.1uF
C12 1 2 0.1uF
U1
74AVC32T245
C3 VCCB1
F3 VCCB2
L3 VCCB3
P3 VCCB4
C4 VCCA1
F4 VCCA2
L4 VCCA3
P4 VCCA4
2 LCD_EN R1 33,402 LCDEN A2 1B1
2 LCD_PCLK R14 33,402 LCDPCLK A1 1B2
2 LCD_VSYNC R4 33,402 LCDVSYNC B2 1B3
2 LCD_HSYNC R15 33,402 LCDHSYNC B1 1B4
LCD_DATA15 R7 33,402 RED4 C2 1B5
LCD_DATA14 R8 33,402 RED3 C1 1B6
LCD_DATA13 R10 33,402 RED2 D2 1B7
LCD_DATA12 R12 33,402 RED1 D1 1B8
LCD_DATA10 R13 33,402 GRN5 E2 2B1
LCD_DATA11 R19 33,402 RED0 E1 2B2
LCD_DATA8 R21 33,402 GRN3 F2 2B3
LCD_DATA9 R23 33,402 GRN4 F1 2B4
LCD_DATA6 R25 33,402 GRN1 G2 2B5
LCD_DATA7 R27 33,402 GRN2 G1 2B6
LCD_DATA4 R29 33,402 BLU4 H2 2B7
LCD_DATA5 R31 33,402 GRN0 H1 2B8
J2 3B1
J1 3B2
K2 3B3
K1 3B4
L2 3B5
L1 3B6
M2 3B7
M1 3B8
N2 4B1
LCD_DATA3 R33 33,402 BLU3 N1 4B2
LCD_DATA1 R35 33,402 BLU1 P2 4B3
LCD_DATA2 R37 33,402 BLU2 P1 4B4
LCD_DATA0 R39 33,402 BLU0 R2 4B5
R1 4B6
T2 4B7
T1 4B8
A4 1OE*
H4 2OE*
J4 3OE*
T4 4OE*
LCD_DATA[0..15] 2
B3 GND1
D3 GND2
E3 GND3
G3 GND4
K3 GND5
M3 GND6
N3 GND7
R3 GND8
1A1 A5 B_LCDEN R2 10,402 BEN 4
1A2 A6 B_PCLK R3 10,402 BPCLK 4
1A3 B5 B_VSYNC R5 10,402 BVSYNC 4
1A4 B6 B_HSYNC R6 10,402 BHSYNC 4
1A5 C5 B_D15 R16 10,402 BRED4 4
1A6 C6 B_D14 R9 10,402 BRED3 4
1A7 D5 B_D13 R11 10,402 BRED2 4
1A8 D6 B_D12 R17 10,402 BRED1 4
2A1 E5 B_D10 R18 10,402 BGRN5 4
2A2 E6 B_D11 R20 10,402 BRED0 4
2A3 F5 B_D8 R22 10,402 BGRN3 4
2A4 F6 B_D9 R24 10,402 BGRN4 4
2A5 G5 B_D6 R26 10,402 BGRN1 4
2A6 G6 B_D7 R28 10,402 BGRN2 4
2A7 H5 B_D4 R30 10,402 BBLU4 4
2A8 H6 B_D5 R32 10,402 BGRN0 4
3A1 J5
3A2 J6
3A3 K5
3A4 K6
3A5 L5
3A6 L6
3A7 M5
3A8 M6
4A1 N5
4A2 N6 B_D3 R34 10,402 BBLU3 4
4A3 P5 B_D1 R36 10,402 BBLU1 4
4A4 P6 B_D2 R38 10,402 BBLU2 4
4A5 R5 B_D0 R40 10,402 BBLU0 4
4A6 R6
4A7 T5
4A8 T6
1DIR A3
2DIR H3
3DIR J3
4DIR T3
GND16 B4
GND15 D4
GND14 E4
GND13 G4
GND12 K4
GND11 M4
GND10 N4
GND9 R4
DGND
DGND
VDD_3V3
R83 10K
2 GPIO1_16
S2 3 1 4 2 B3F-1000
VDD_3V3
R82 10K
GPIO1_17
S3 3 1 4 2 B3F-1000
VDD_3V3
R80 10K
GPIO1_19 2
S4 3 1 4 2 B3F-1000
VDD_3V3
R81 10K
GPIO3_16 2
S5 3 1 4 2 B3F-1000
VDD_3V3
R89 10K
ENTER
GPIO0_3 2
S7 3 1 4 2 B3F-1000
S6 B3F-3100
2 PWR_BUT 1 3 2 4
2,4 RESET
S1 B3U-1100 1 2 3
VDD_3V3
R65 5.6K,5%
R66 5.6K,5%
R67 4.75K
R68 4.75K
R69 4.75K
2 I2C2_SCL
2 I2C2_SDA
SW1
SW DIP-2
DGND
SW1_A0 1
SW1_A1 2
SW1_A3 3
Board ID memory
VDD_3V3
U4
6 SCL
5 SDA
A0
A1
A2
VCC 8
VSS 4
WP 7
CAT24C256W
C41 2 1 0.1uF
DGND
R72 4.75K
TP1 T POINT A
TP2 T POINT A
DGND

This work is licensed under the Creative Commons Attribution-Share Alike 3.0 Unported License. All derivative works are to be attributed to CircuitCo LLC.

beagleboardtoys is owned by CircuitCo LLC.

beagleboardtoys.com

1380 Presidential Dr.
#100
Richardson, TX 75081
www.beagleboardtoys.com

Title		
BeagleBone LCD3 Cape BUFFER		
Size B	Document Number BB-BONE-LCD3-01	Rev A2
Date: Wednesday, July 25, 2012	Sheet 3 of 4	

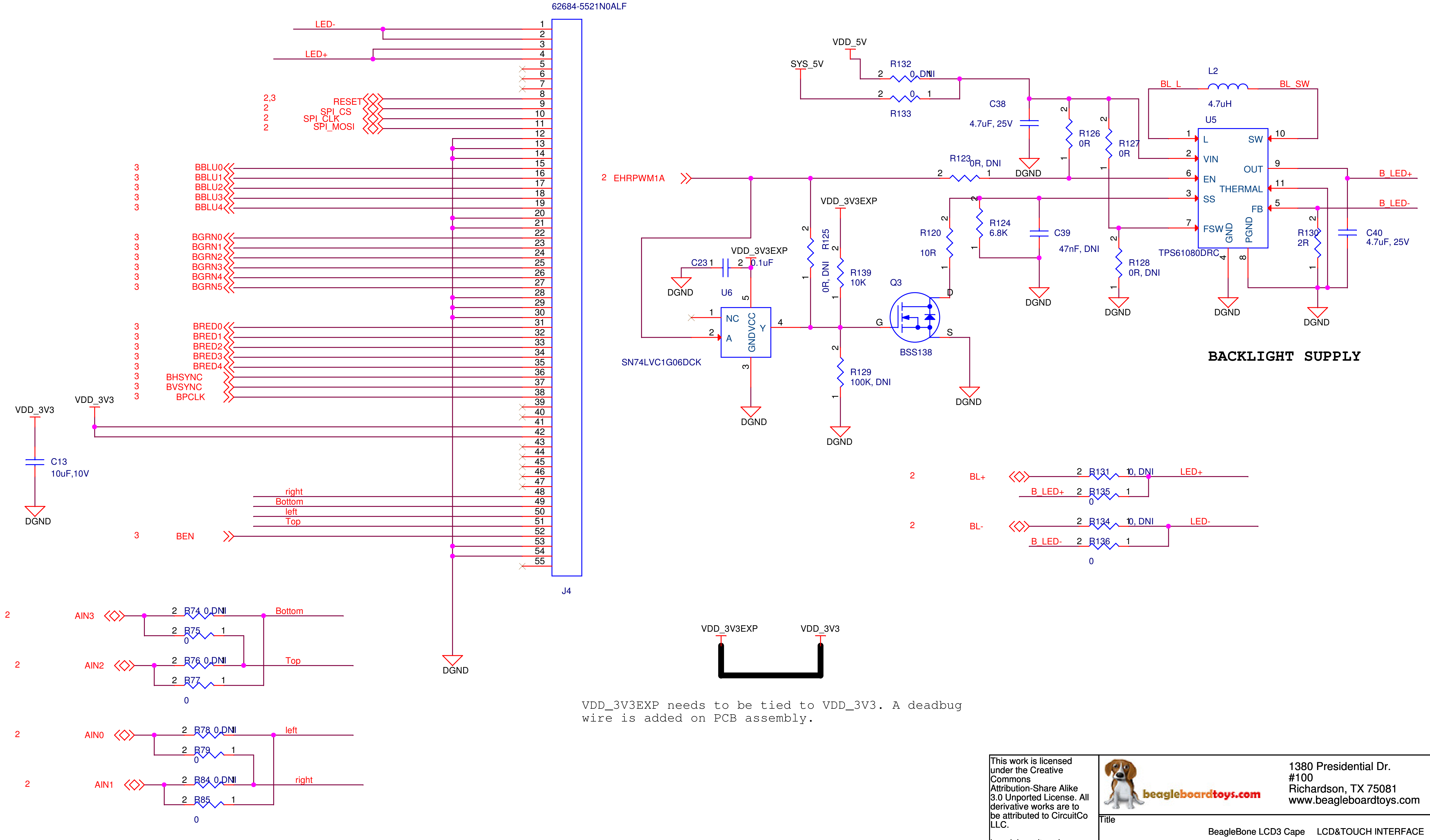
62684-5521N0ALF
J4
LED-
LED+
2,3 RESET
2 SPI_CS
2 SPI_CLK
2 SPI_MOSI
3 BBLU0
3 BBLU1
3 BBLU2
3 BBLU3
3 BBLU4
3 BGRN0
3 BGRN1
3 BGRN2
3 BGRN3
3 BGRN4
3 BGRN5
3 BRED0
3 BRED1
3 BRED2
3 BRED3
3 BRED4
3 BHSYNC
3 BVSYNC
3 BPCLK
VDD_3V3
VDD_3V3
C13
10uF,10V
DGND
right
Bottom
left
Top
3 BEN
DGND
2 AIN3
R74 0 DNI
R75 0
Bottom
2 AIN2
R76 0 DNI
R77 0
Top
2 AIN0
R78 0 DNI
R79 0
left
2 AIN1
R84 0 DNI
R85 0
right
VDD_5V
SYS_5V
R132 0, DNI
R133 0
C38 4.7uF, 25V
R126 0R
R127 0R
R123 0R, DNI
2 EHRPWM1A
DGND
L2 4.7uH
BL_L
BL_SW
U5
L
SW
VIN
OUT
EN
THERMAL
SS
FB
FSW
GND
PGND
TPS61080DRC
B_LED+
B_LED-
R130 2R
C40 4.7uF, 25V
VDD_3V3EXP
R125 0R, DNI
R139 10K
R120 10R
R124 6.8K
C39 47nF, DNI
R128 0R, DNI
Q3
BSS138
D
G
S
C23 0.1uF
U6
NC
A
Y
VCC
GND
SN74LVC1G06DCK
R129 100K, DNI
DGND
BACKLIGHT SUPPLY
2 BL+
B_LED+
R131 0, DNI
R135 0
LED+
2 BL-
B_LED-
R134 0, DNI
R136 0
LED-
VDD_3V3EXP
VDD_3V3

VDD_3V3EXP needs to be tied to VDD_3V3. A deadbug wire is added on PCB assembly.

This work is licensed under the Creative Commons Attribution-Share Alike 3.0 Unported License. All derivative works are to be attributed to CircuitCo LLC.

beagleboardtoys is owned by CircuitCo LLC.

beagleboardtoys.com

1380 Presidential Dr.
#100
Richardson, TX 75081
www.beagleboardtoys.com

Title
BeagleBone LCD3 Cape LCD&TOUCH INTERFACE

Size B
Document Number BB-BONE-LCD3-01
Rev A2

Date: Tuesday, October 09, 2012
Sheet 4 of 4