Performance of the nanoPVD system and the resistivity of deposited aluminium and copper.

Alex Stachurski & Davy Arendshorst

March 30, 2026

Abstract

In this research, the performance of the Moorfield nanoPVD system is characterised, and the resistivity of the deposited metal structure are studied.

Contents

1 Introduction **1**

2 Theory **2**
2.1 Lithography 2
2.2 Physical Vapour Deposition 3
2.3 Key Performance Indicators (KPIs) 4
2.4 Resistance and resistivity 5

3 Methodology **6**
3.1 Methods of measurements 6
3.1.1 Length, width and height 6
3.1.2 Resistance 6
3.2 Setup 7
3.2.1 Design 7
3.2.2 fabrication 8
3.2.3 Measurements 9

4 Results **11**
4.1 Dimensions 11
4.2 resistance and resistivity 11

5 Discussion **12**

6 conclusion **13**

7 Recommendations **14**

Appendices **15**

A Different Appendix **16**

1 Introduction

The microfabrication of semiconductors and devices requires multiple processes with certain control and accuracies for producing them, one of these processes is the deposition of metals. For the deposition of metals, the Hague university of Applied Sciences acquired a new physical vapour deposition system, a Moorfield nanoPVD system (nanoPVD) [1]. As this system is newly acquired, it is not yet extensively tested.The nanoPVD is capable of depositing different materials, these materials include aluminium and copper. Aluminium and copper are very often used in the semiconductor industry and are therefore important materials to deposit reliably with known characteristics, such as deposited height and resistivity.

The properties of the deposited metals that will be researched are deposited height and resistivity. The nanoPVD is able to measure the deposition rate and thus the layer height, this feature, however, is not calibrated. The deposited layer height will be compared with the layer height claimed by the nanoPVD and a tooling factor will be calculated in order to make these heights equal for future use of the nanoPVD.

The research questions are as follows:
"What is the resistivity of the deposited aluminium and copper?"

"What is the tooling factor of the Moorfield nanoPVD system for aluminium and copper?"

2 Theory

This chapter provides the theory for the lithography cycle, deposition, and resistance and resistivity for characterisation.

2.1 Lithography

Lithography (also known as photolithography) is a technique that uses light to produce a pattern on a photoresist layer that is applied to a sample. This sample is typically a silicon wafer. After depositing the photoresist on a silicon wafer, the photoresist can be spun in a process called spin coating, which equally distributes the photoresist across the surface of the silicon wafer. Depending on the spin speed, a thinner photoresist layer forms on the silicon wafer. Namely, a faster spin speed results in a thinner photoresist layer. After the spin coating, a soft baking step is introduced to evaporate excess solvents and solidify the photoresist by heating the wafer. By exposing the photoresist to laser light with a certain wavelength, it becomes soluble in certain chemical solutions. A positive photoresist (which will be used in this project) causes the areas exposed by the laser light to become soft. The silicon wafer is then submerged in a chemical solution, called the developer, and the soft regions of the photoresist dissolve. This leaves the unexposed regions of photoresist on the surface of the silicon wafer. The remaining photoresist acts as a fillable pattern for a metal deposition (Physical Vapour Deposition). The deposited metal in the pattern starts to adhere to the silicon wafer. The remaining metal on the photoresist is loosely bound to each other and can be dissolved via a lift off process. The entire lithography cycle is schematically depicted in figure 1. This process creates the possibility of producing patterns that can turn into different devices.

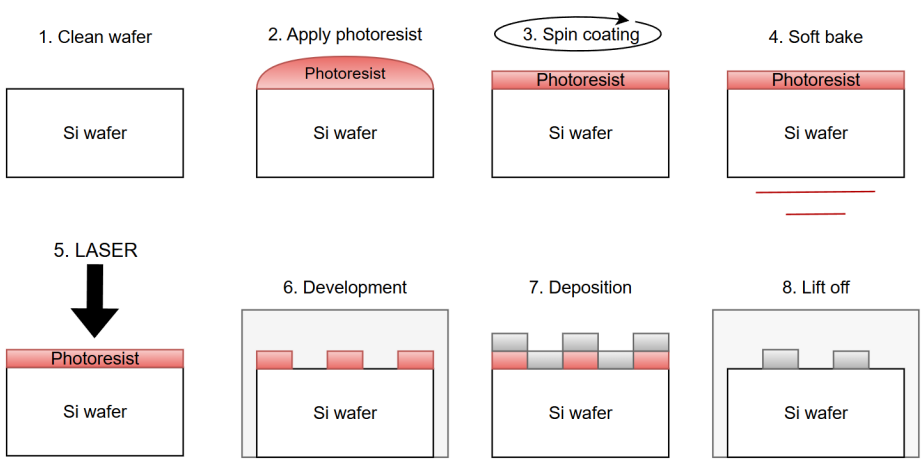

Figure 1: Lithography cycle; 1. Start with a clean wafer 2. Apply photoresist 3. Spin coat 4. Soft bake 5. LASER 6. Development 7. Deposition 8. Lift off

2.2 Physical Vapour Deposition

After the lithography step, a metal deposition can be made onto the surface of a wafer via Physical Vapour Deposition (PVD). Physical Vapour Deposition relies on a vacuum environment for evaporating a metal because the necessary temperature for evaporation decreases at lower pressures. As pressure drops, so does the vapour pressure, and the metal can be evaporated at lower temperatures. Furthermore, the vacuum is needed for deposition because the mean free path of the vapour is required to be long enough to reach the wafer where the deposition is made.

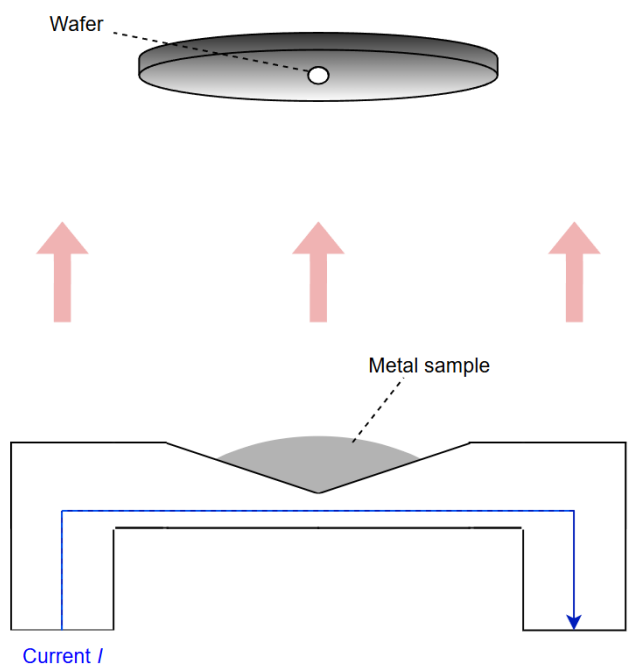

Figure 2: Schematic representation of a Physical Vapour Deposition. Metal sample is evaporated via joule heating of the sample stage by a high electric current I. Gaseous metal expands upwards and onto the wafer.

In figure 2, the concept of Physical Vapour Deposition is schematically depicted. The stage on which the metal sample is placed, is being subjected to a high electric current I that joule heats it up to the required temperature for evaporation. The evaporated metal gas expands upwards and deposits onto the wafer, creating a thin layer. **Poor step coverage** $->$ **(?)**

2.3 Key Performance Indicators (KPIs)

The deposited metal attains certain deviations from the desired height and width. These deviations give indications of the quality and irregularities of the thin metal layer, such as roughness. This gives rise to Key Performance Indicators (KPI's) like average roughness (Ra), Line Width Roughness (LWR), and Line Edge Roughness (LER) that can characterise the quality and deviation. The equation for the average roughness is written as:

$$Ra = \frac{1}{l}\int_0^l |z(x)|dx \tag{2.1}$$

With l the length and $z(x)$ the height (dependent on the width x) of a given structure in units of length. A high Ra value corresponds to a rough surface, while a low value corresponds to a smooth surface. The LWR is mathematically described as three times the standard deviation of the line width distribution σ_{lw}. In this way, the LWR captures the deviations of the laser in the lithography process. Where some spots in the photoresist receive too little or too much exposure, or something in between. So for the LWR, the following equation holds as:

$$LWR = 3\sigma_{lw} = 3\sqrt{\frac{1}{N-1}\sum_{n=1}^{N}(L(x)-\bar{L})^2} \tag{2.2}$$

N is the number of retrieved data points on the x-axis, where a measurement is made in a straight line over a surface. Furthermore, $L(x)$ is the line width at a certain x position, and $\bar{L}$ is the average line width (both in units of length). The laser, PVD and lift off processes ultimately define the obtained line widths as well as the edges of the deposited metal structure. The LER is defined as three times the standard deviation of individual edge positions σ_{le} along a developed line and thus translates into the mathematical equation:

$$LER = 3\sigma_{le} = 3\sqrt{\frac{1}{N-1}\sum_{n=1}^{N}(E(x)-\bar{E})^2} \tag{2.3}$$

$E(x)$ is the line edge at position x, and $\bar{E}$ is the average line edge position. If the edges of a line are uncorrelated, meaning that the variations of one edge do not influence the variations of the other edge, the relation between LWR and LER is given by:

$$\frac{LWR}{LER} = \sqrt{2} \tag{2.4}$$

If the relation in equation 2.4 is kept true, the edges fluctuate independently. Deviations from this relation indicate how the structure takes shape, and depending on the value of $\frac{LWR}{LER}$, what the plausible explanations for these variations might be. For example, if $\frac{LWR}{LER} < 2$, then there is a positive correlation, and the edges move together. This often happens when the entire line shifts laterally, or the printed lines in the lithography process deviate similarly. In the

case of $\frac{LWR}{LER} > \sqrt{2}$, the edges move inward and outward in opposite directions, and are anti-correlated. Fluctuations in the width appear more often which is not ideal for the electrical characteristics as resistivity can drop. The causes are related to process asymmetries and a worsened photoresist pattern.

(Resist blur is the spatial spreading of the chemical reaction inside a photoresist after exposure, which smooths or blurs the printed pattern compared to the optical image.)

2.4 Resistance and resistivity

From the deposited metal structure, several electrical properties can be calculated, however, only resistance and resistivity are considered in this research. The resistance R in Ohms can be calculated using Ohm's law:

$$R = \frac{U}{I} \tag{2.5}$$

With U the voltage in Volts and I the current in Amps. This is a measure for how much an electric circuit, in this case a structural metal layer, resists a current when a voltage potential is applied. Additionally, the resistance of a wire or rectangular metal structure is described as:

$$R = \rho \frac{l}{A_c} \tag{2.6}$$

ρ is the resistivity (or specific resistance) in Ohms per meter, l is the length of the structure or wire in meters, and A_c the cross-sectional area in square meters. The resistivity is a specific property of a material. The resistivity of Aluminium is $\rho_{Al} = 2,65 \cdot 10^{-8}$ Ωm, and for Copper $\rho_{Cu} = 1,68 \cdot 10^{-8}$ Ωm (both at room temperature).

3 Methodology

This chapter describes the methods of measurements, the fabrication of the structure on the wafers, equipment used and chemicals used.

3.1 Methods of measurements

The goal of this project is to determine the resistivity of the deposited aluminium, in equation 2.6, the length, width, height and the resistance of a section are needed. Measurements of these quantities are possible.

The length and width are measured with the JEOL SEM 6360, a Scanning Electron Microscope (SEM) [2]. The height is measured with the KLA TENCOR AlphaStep D-120, a profilometer [3]. While the resistance is measured with the four-probe method, using two DMMs and a voltage/current source [4][5].

3.1.1 Length, width and height

The length and width measurements are obtained from images made by the SEM. These images are loaded into python for processing, where the scale (meter/pixel) is obtained and the dimensions of the structure are determined in pixels. The pixel measurements are then converted into (milli)meters. The measurements might need to be performed in smaller sections in order to measure more accurately as the resolution of each image is limited.

The height of the metal layer is measured with the profilometer. The measurement data is available in the program used to operate the profilometer, however, it is also possible to extract it. Extraction is preferable since more analysis is possible with python than with the operating software. The data is extracted in a XML format, this data is able to be parsed with python. The data can then be analysed further in python.

3.1.2 Resistance

The resistance is measured with the four-probe method, this method removes the effect of lead (and contact) resistance. The four-probe method is depicted in figure 3.

The four-probe method works by applying a current through 2 probes (probes 1 and 2) and measuring the voltage across 2 different probes (probes 3 and 4). No current flows through probes 3 and 4, this is caused by the high impedance of the voltmeter compared to the rest of the circuit.

As no current flows through probes 3 and 4, no voltage drop occurs over the probes. This means that the only voltage drop observed by the probes is caused by the resistance between points A and B. This also means that the resistance caused by imperfect contact between the probes and the conductor do not contribute to the measured voltage drop.

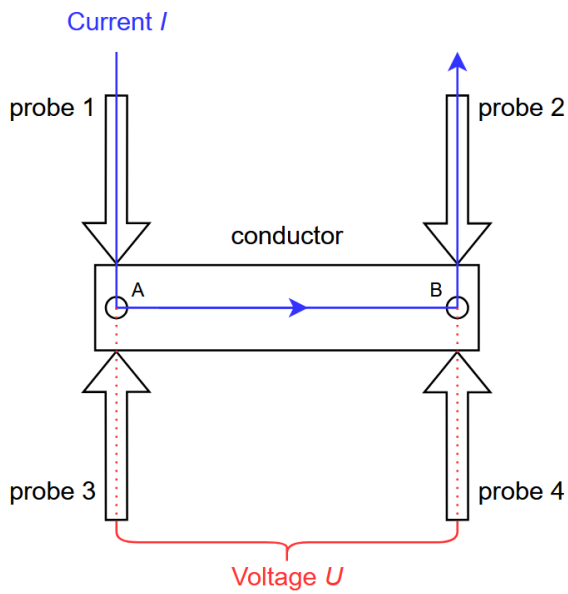

Figure 3: Depiction of the four-probe method, with I the current (blue) and U the voltage (red)

3.2 Setup

To proceed with the methods described in paragraph 3.1, a design of the metal structure is needed. The following design is made specifically to make the four-probe measurements practically possible. With this the entire setup required for this research is described.

3.2.1 Design

A structure has to be designed and fabricated that facilitates the electrical measurements and deposition. In order to accomplish electrical measurements, contact pads are necessary. The minimum size for these contacts is about 1 mm by 1 mm this is a limit as probes need to be put onto the contacts for the electrical measurements.

Another limitation is the wafer size, the wafers are roughly 10 mm by 10 mm. The dimensions of the wavers vary significantly though as the original wafers are circular. As a result some have equal side lengths while some do not. The design assumes a 10 mm by 10 mm wafer, however, the wafers will be selected to be as accommodating as possible to the design. Also wafers with a single side length of 12 mm have been requested.

Aside from these constraints the design should optimize redundancy and amount of measurements that can be made. This implies that as many contacts as

possible should be made.

The design that was finalised is depicted in figure 4. This design has 8 contact pads and 3 channels, enabling 24 four-probe measurements per structure **as long as no pads or channels are defective**.

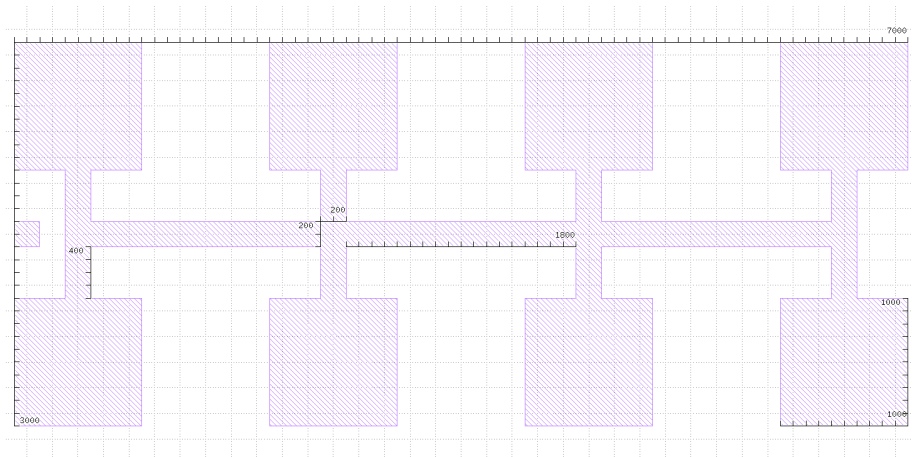

Figure 4: Depiction of final design made in KLayout, the units of the rulers are µm

With the design ready the fabrication process can proceed.

3.2.2 fabrication

The procured wafers are cleaned in a supersonic bath, the Branson 2510 Ultrasonic cleaner, for 15 minutes [6]. The wafers are blown dry and placed in the POLOS SPIN150i spin coater [7].

Once the wafer is secure in the spin coater, a pipette is used to apply the ma-P 1210 photoresist onto the wafer and the spin coater is set to the 'Chris 301' program. Once the program is finished the wafer taken out of the spin coater and is placed onto the IKA RH basic magnetic stirrer (Hotplate) [8]. Once 90 seconds have passed, the wafers are taken off the hotplate and moved to the MicroWriter ML laser writer [9].

In the laser writer, the wafer must be aligned and the design must be loaded in. Once the laser writer starts writing, photoresist is exposed to 100 $\frac{\text{mJ}}{\text{cm}^2}$ of radiation in the areas specified by the design. The laser used in the fabrication has a 405 nm wavelength and has a spot size of 1 µm and the quality is set to 2 $\frac{\mu\text{m}}{\text{pixel}}$. This is changed during the project to a 5 µm spot size with a 5 $\frac{\mu\text{m}}{\text{pixel}}$ quality. This is done due to not properly exposed and developed samples.

Once the laser writer has completed the exposure, the wafers are placed in the mr-D 526/S developer for 50 seconds to carry out the development process. The

wafer is then taken out of the developer and put into demineralised water to rinse the developer off of the wafer and stop the development process.

The developed wafer is now ready to have a layer of metal deposited onto it. The wafer is placed in the Moorfield nanoPVD benchtop thermal evaporation system (nanoPVD). A 50 to 100 nm thick layer of metal is deposited onto the wafer by the nanoPVD, this metal is either aluminium or copper.

The nanoPVD places metal on the entire area of the wafer, but only metal on the design is needed. The wafer is placed into a wafer holder and put into a beaker of acetone, the beaker is in turn placed into the supersonic bath to perform the lift-off process. The lift-off is monitored and the wafer is taken out of the acetone beaker once all the excess metal is removed. The wafer is then rinsed in demineralised water and dried with pressurised nitrogen gas. The fabrication process is complete once the wafer is dried.

3.2.3 Measurements

Once the sample is manufactured, the volume of the channel and the resistance of the channel must be measured. The electrical measurements should proceed first, as the measurement of the height of the channel is possibly destructive. The stylus of the profilometer, despite using a low force (1 mg), can pierce the metal layer.

The order of electrical measurement and creation of SEM images is not of great importance, however it is possible to confirm that the silver epoxy does not connect two contact pads. If a deviating measurement is observed, a short circuit is a possible cause, which means that a microscopic measurement should be performed to confirm the cause.

The electrical measurements are performed with the four point method, this method reliably measures the resistance of **the channel only**. With the current design, each channel can be measured four separate times by changing the order of the probes.

Since each structure produces a maximum of 24 measurements, the measurements need to be named for clarity. The measurements will be named in accordance to figure 5, with each measurement having a current applied through two pads and a voltage measured between two pads.

Each resistance measurement will be noted by recording the current through two pads and voltage across two pads. The current is noted with symbol I and the voltage is noted with symbol U, along with subscripts corresponding to the pads used for these measurements. For example, the resistance measurement of channel A with the current flowing through pads 1 and 2 and a voltage across pads 5 and 6 will have symbols I_{12} and U_{56} associated with it.

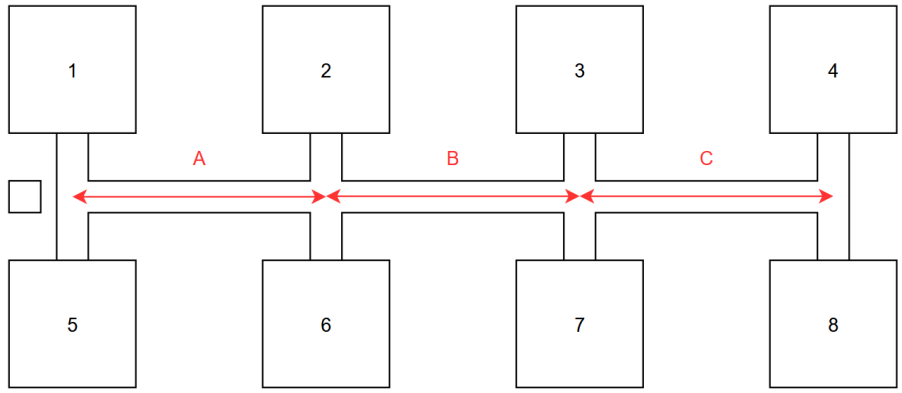

Figure 5: A schematic depiction of the used design (not to scale). The Pads are numbered and the channels are assigned a letter

The eventual goal is to determine the resistivity of the deposited material. For that goal an adjusted form of equation 2.6, equation 3.1, is used.

$$\rho = \frac{RA_c}{l} = \frac{U \cdot wh}{I \cdot l} \tag{3.1}$$

R is the resistance of the channel where $R = \frac{U}{I}$, A_c is the cross-sectional area of the channel where $A_c = wh$ as the channel is assumed to be rectangular. w is the width of the channel and h is the height of the channel.

To use equation 3.1, the length, width and height of the channel are necessary. These quantities must be measured for each individual channel, the dimensions of the contact pads are, however, irrelevant for the purpose of determining resistivity. The resistance of the contact pads does not impact the measured resistance of the channel, as the 4-probe method is used.

4 Results

4.1 Dimensions

4.2 resistance and resistivity

5 Discussion

6 conclusion

7 Recommendations

References

References

[1] *Nanopvd-st15a: Benchtop high-vacuum magnetron sputtering and thermal evaporation system installation/operation manual*, version 6, Moorfield Nanotechnology Limited, Knutsford, Cheshire, UK, Oct. 2025.

[2] JEOL Ltd., *Jsm-6360 and jsm-6360lv scanning electron microscope: Instruction manual*, Manual No. ISM6360/6360LV-3, Printed in Japan, JEOL Ltd., Akishima, Tokyo, Japan, 2003.

[3] KLA-Tencor Corporation, *Alphastep d-100 & d-120 user manual*, KLA-Tencor Corporation, Milpitas, CA, USA, 2011.

[4] Good Will Instrument Co., Ltd., *GW INSTEK GDM-8246 User Manual*, GW INSTEK, 2002.

[5] Delta Elektronika B.V., *Delta Elektronika ES150 Product Manual, Version V202207*, Delta Elektronika B.V., 2022.

[6] *Ultrasonic cleaners models 1510, 2510, 3510, 5510, 8510: Operator's manual*, CPN-214-142 Rev. A, Branson Ultrasonics Corp., Danbury, CT.

[7] *Polos spin150i/200i: Operating instructions*, SPS-Europe B.V., Putten, The Netherlands, Aug. 2013.

[8] *Ika rh digital / rh basic: Betriebsanleitung / operating instructions*, IKA-Werke GmbH & Co. KG, Staufen, Germany.

[9] *Microwriter ml®: User manual*, Durham Magneto Optics Ltd, Durham, UK, Oct. 2013.

Appendices

A Different Appendix