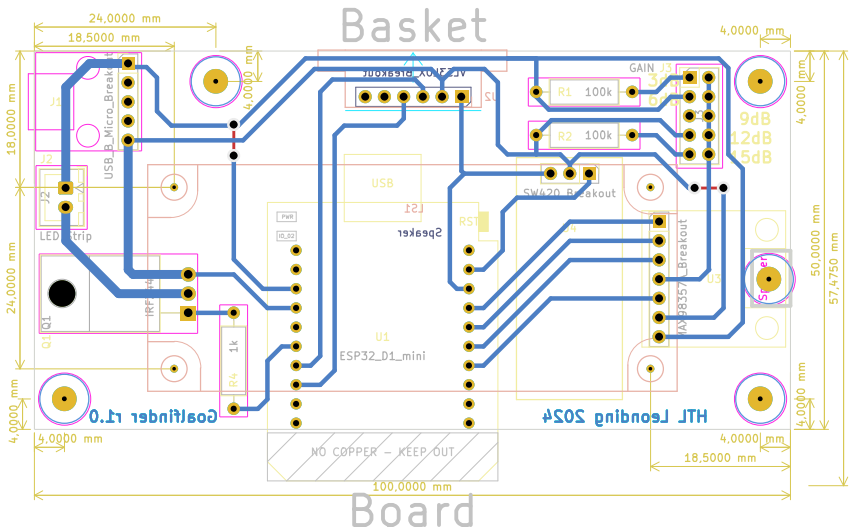

Sheet:
File: LeoIoT_Goalfinder.kicad_pcb

Title:

Size: A4	Date:	Rev:
KiCad E.D.A. 8.0.1		Id: 1/1