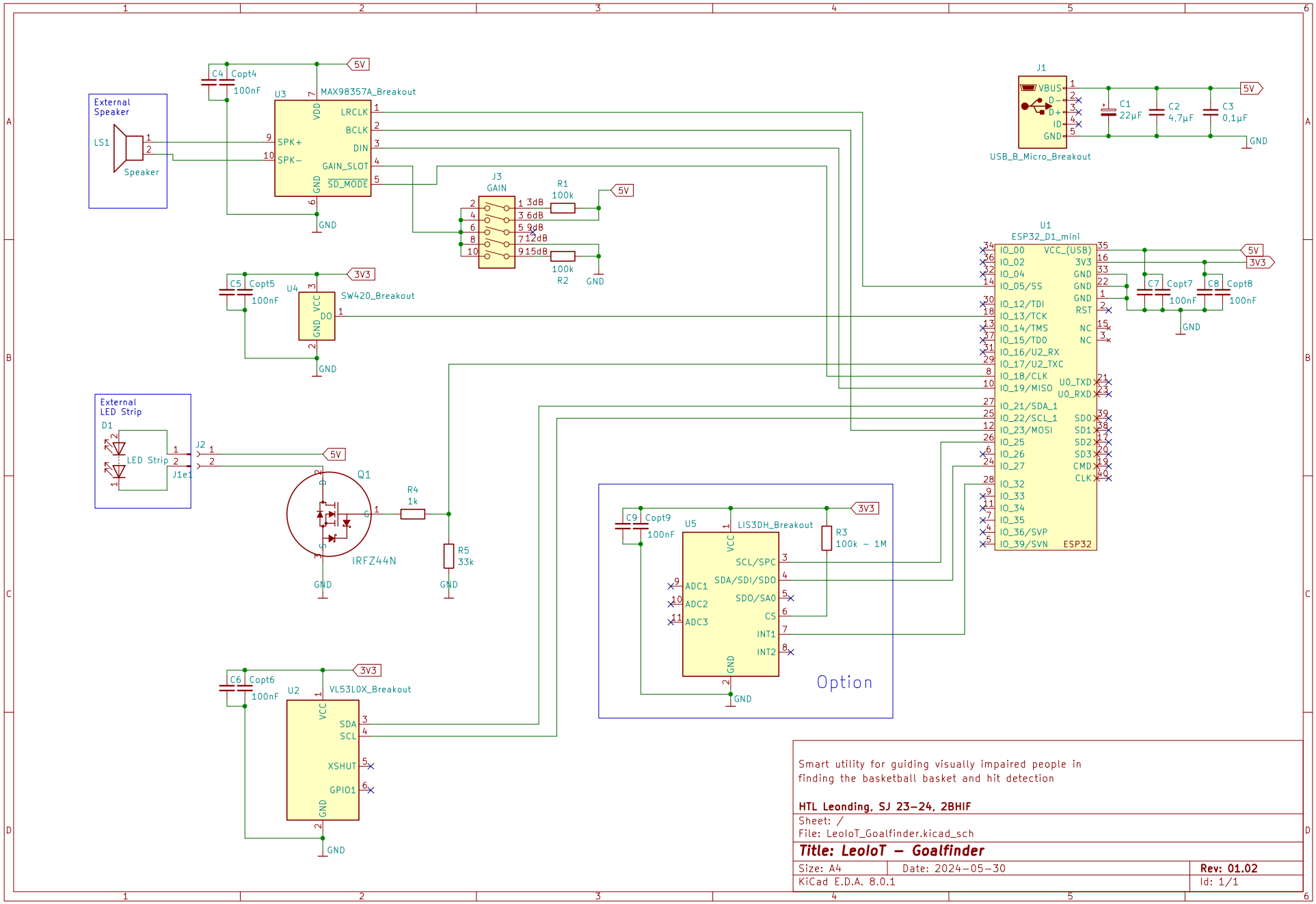

Smart utility for guiding visually impaired people in finding the basketball basket and hit detection

HTL Leonding, SJ 23–24, 2BHIF

Sheet: /
File: LeoIoT_Goalfinder.kicad_sch

Title: LeoIoT – Goalfinder

Size: A4	Date: 2024–05–30	**Rev: 01.02**
KiCad E.D.A. 8.0.1		Id: 1/1