Information Fusion 119 (2025) 103023

Contents lists available at ScienceDirect

Information Fusion

journal homepage: www.elsevier.com/locate/inffus

Full length article

STA-Net: Spatial–temporal alignment network for hybrid EEG-fNIRS decoding

Mutian Liu [a], Banghua Yang [a,*], Lin Meng [b], Yonghuai Zhang [c], Shouwei Gao [a], Peng Zan [a], Xinxing Xia [a]

[a] School of Mechatronic Engineering and Automation, Shanghai University, Shanghai, 200444, China
[b] Academy of Medical Engineering and Translational Medicine, Faculty of Medicine, Tianjin University, Tianjin, 300354, China
[c] Shanghai Shaonao Sensing Company Ltd, Shanghai, 200444, China

ARTICLE INFO

Keywords:
BCI
EEG
fNIRS
Hybrid BCI
Cross-attention

ABSTRACT

Hybrid brain–computer interfaces (BCI) have garnered attention for the capacity to transcend the constraints of single-modality BCI. It is essential to develop innovative fusion methodologies to exploit the high temporal resolution of electroencephalography (EEG) and the high spatial resolution of functional near-infrared spectroscopy (fNIRS). We propose an end-to-end Spatial–Temporal Alignment Network (STA-Net) that achieves precise spatial and temporal alignment between EEG and fNIRS. STA-Net comprises two sub-layers: the fNIRS-guided Spatial Alignment (FGSA) layer and the EEG-guided Temporal Alignment (EGTA) layer. The FGSA layer calculates spatial attention maps from fNRIS to identify sensitive brain regions and spatially aligns EEG with fNIRS through the weighting of EEG channels. The EGTA layer generates temporal attention maps based on the cross-attention mechanism, thereby producing fNIRS signals that are temporally aligned with EEG. This resolves the issue of temporal mismatch caused by the inherent delay of fNIRS. Finally, spatio-temporally aligned EEG-fNIRS signals are fused to classify mental tasks: motor imagery (MI), mental arithmetic (MA), and word generation (WG). STA-Net achieves remarkable performance, with an average accuracy of 69.65% for MI, 85.14% for MA, and 79.03% for WG in subject-specific evaluations, which is superior to state-of-the-art single-modality and multi-modality algorithms. Moreover, STA-Net exhibits less performance degradation in the early stages of tasks compared with the benchmark methods. The spatial–temporal alignment between EEG and fNIRS enhances the performance of hybrid BCI and promotes the decoding of EEG-fNIRS. STA-Net has the potential to establish a new backbone for EEG-fNIRS BCI. The code is available at https://github.com/MutianLiu-SHU/STA-Net.

1. Introduction

The brain-computer interface (BCI) establishes a direct connection between neural activities that encode the user's intention and control signals for external devices [1]. In BCI systems, various brain physiological signals have been utilized, such as electroencephalography (EEG) [2,3], functional near-infrared spectroscopy (fNIRS) [4,5], functional magnetic resonance imaging (fMRI) [6,7], and magnetoencephalography (MEG) [8,9]. fMRI and MEG offer excellent spatial resolution but are impractical for BCI due to cost and lack of portability. EEG and fNIRS, being wearable and affordable, are more suitable for practical BCI.

EEG and fNIRS primarily focus on distinct physiological activities of the brain, with EEG predominantly measuring electrical signals generated during neuronal activity [10], while fNIRS primarily captures cerebral blood flow changes [11]. EEG offers exceptional temporal resolution and enables near-instantaneous responses; however, it remains highly susceptible to various artifacts [10,12]. fNIRS measures hemodynamic fluctuations with light, offering superior spatial resolution for deep brain regions and better robustness against motor artifacts [11]. However, fNIRS exhibits limited temporal resolution and inherent delay [13]. Therefore, EEG-fNIRS hybrid BCI can effectively cover the shortages of EEG- or fNIRS-standalone BCI.

Since multimodal fusion is crucial and challenging in hybrid BCI, extensive efforts aim to efficiently integrate EEG and fNIRS. The current studies are primarily classified into two categories: feature- and decision-level fusion [14,15]. The process of feature-level fusion involves the integration of features from diverse modalities, either at

* Corresponding author.
E-mail address: yangbanghua@shu.edu.cn (B. Yang).

https://doi.org/10.1016/j.inffus.2025.103023
Received 22 October 2024; Received in revised form 15 January 2025; Accepted 7 February 2025
Available online 15 February 2025
1566-2535/© 2025 Elsevier B.V. All rights are reserved, including those for text and data mining, AI training, and similar technologies.

the input layer or the feature layer [16]. Gao et al. used an EEG-informed fNIRS general linear model (GLM) to obtain a regression matrix, extracted its common spatial pattern (CSP) features as fNIRS features, and combined them with the CSP features of EEG to create hybrid features [17]. A novel multimodal signal analysis framework was proposed to extract the task-related features for EEG and fNIRS signals respectively and analyze their correlation [18]. Ali et al. employed correlation filters to select single-modal channels and features, thereby extracting complementary information from both modalities to train the classifier [15]. Cooney et al. proposed an EEG-fNIRS hybrid BCI using two convolutional networks to decode speech, with concatenated EEG and fNIRS features fed into a gated recurrent unit (GRU) layer [19]. Arif et al. fused the temporal and spatial features of EEG and fNIRS to achieve cross-subject mental state recognition [20]. He et al. fed the fused features of EEG and fNRIS into a multitask learning module to improve the performance of the hybrid BCI [21]. Qiu et al. proposed an end-to-end deep learning network incorporating the cross-attention mechanism to investigate the mutual information between EEG and fNIRS features [22]. Feature-level fusion enables the model to effectively integrate information from diverse modalities, enhancing the depth and breadth of extracted features. However, it may also lead to information loss and reduce the adaptability and learning capacity of model by imposing rigidity between modes during training [23].

Decision-level fusion involves the collective assessment and processing of extracted feature vectors after feature-level fusion, aiming to attain a consistent conclusion regarding the observed target [24]. Kwak et al. proposed a weighted decision fusion approach, which generates prediction scores based on EEG and fNIRS features and employs these scores to weight the corresponding prediction results [25]. Jiang et al. proposed an independent decision path fusion method with multiple paths for analyzing EEG and fNIRS and developed a reliable-based decision-level fusion approach, assigning weights to decision scores based on accuracy [26]. Rabbani et al. constructed a decision fusion model on the basis of maximum likelihood estimation and probed into the performance of combinations of various classification networks [27]. Wang et al. developed a decision network that integrates the decisions from EEG and fNIRS modalities by employing single-modal accuracy as weights, facilitating correlation analysis and decision fusion to enhance overall performance [28]. Decision-level fusion preserves original features, enhancing the exploration of correlations and complementarities between modalities. This approach increases model flexibility by dynamically adjusting inter-modality relationships, but decision-level fusion is more computationally complex than feature-level fusion. Additionally, any feature extraction issues can heavily impact fusion performance [29].

Another challenge encountered by EEG-fNIRS BCI is the synchronization issue between EEG and fNIRS, specifically addressing the delayed hemodynamic response of fNIRS (neurovascular coupling). EEG measures electrical signals and responds promptly, whereas fNIRS detects alterations in blood oxygenation and possesses a delayed response in comparison to EEG, which can amount to 10 s [30–32]. The delay may result in temporal misalignment between task-related fNIRS signals and EEG signals, thereby compromising the performance of hybrid BCI. For instance, Kwak et al. divided the data into two segments (1–5 s and 6–10 s) and found that the second segment performed significantly better [25], Shin et al. also discovered that the classification effect in the later period of the task and even during the rest stage after the task was superior to that in the early period of the task [30]. Some studies set a temporal offset relative to the onset of the task to correct the delay of fNIRS, such as Katus et al. applied an 8 s offset relative to stimulus onset [33], Cooney et al. adopted a 1.5 s offset in the short task period (2 s) [19], and Zhang et al. extracted a data window spanning from 2 to 7 s for calculating the features of fNIRS [31]. However, the delay of fNIRS demonstrates variability, with the amount of delay potentially differing among various subjects and tasks [30,34,35]. For instance, studies have demonstrated that the fNIRS response time during motor imagery (MI) task is significantly shorter compared to that observed during mental arithmetic (MA) and word generation (WG) tasks [30,34]. Hosni et al. have demonstrated inter-individual variations in fNIRS response times when exposed to identical stimuli [35]. Therefore, the use of a fixed offset constrains the generalizability of hybrid BCIs, hindering their ability to achieve adaptive and precise temporal alignment between EEG and fNIRS signals.

Effective EEG-fNIRS integration necessitates complementing the signals and synchronizing their spatial–temporal alignment. Therefore, we propose a novel EEG-fNIRS hybrid method, named Spatial–Temporal Alignment Network (STA-Net), which consists of two sub-layers: fNIRS-guided spatial alignment (FGSA) layer and EEG-guided temporal alignment (EGTA) layer. The FGSA layer extracts task-related brain regions from fNIRS and aligns EEG with fNIRS spatially by weighting corresponding EEG channels. The EGTA layer captures global temporal dependencies between EEG and fNIRS, enabling the generation of temporally aligned fNIRS with EEG. Subsequently, the spatio-temporally aligned EEG and fNIRS signals are weighted and combined at the decision-level, resulting in the final prediction. STA-Net integrates fusion at both the feature- and decision-level, effectively leveraging the complementary characteristics of the two signals and mitigating the temporal mismatch issue arising from the inherent delay of fNIRS. Detailed comparative experiments are conducted on two public datasets of different mental tasks, demonstrating the promising performance of STA-Net.

The contributions are summarized as follows:

- We propose a novel Spatial–Temporal Alignment Network (STA-Net) for the EEG-fNIRS hybrid BCI system. STA-Net achieves remarkable performance on public datasets by the spatial–temporal alignment between EEG and fNIRS signals.
- We design an EEG-guided Temporal Alignment (EGTA) layer to align fNIRS with EEG signals temporally. EGTA layer dynamically adjusts the fNIRS offset, achieving precise and self-adapting temporal alignment between EEG and fNIRS signals.
- We conduct extensive analysis on the attention maps generated from STA-Net. The findings demonstrate the dynamic adaptability of STA-Net in adjusting weight distribution across different paradigms and subjects, thereby validating its effectiveness and generalizability while enhancing interpretability.

2. Dataset

2.1. Experimental setup

Two public benchmark datasets [30,34] were utilized to evaluate STA-Net. The multi-task dataset-A [30] simultaneously collected EEG and fNIRS data from a total of 29 subjects (14 males and 15 females), consisting of twenty-eight right-handed subjects and one left-handed subject, with an average age of 28.5 ± 3.7 years. EEG signals were recorded at 1000 Hz from 30 channels, and fNIRS signals were recorded at 12.5 Hz from 36 channels consisting of 14 sources and 16 detectors. The placement of EEG electrodes, fNIRS sources, and detectors is shown in Fig. 1(a). The EEG and fNIRS signals were downsampled to 200 Hz and 10 Hz, respectively, by the data provider. This dataset contains two task paradigms: MI task and MA task. Subjects were required to perform three sessions of MI and MA tasks each. Each session comprised a 1-min pre-experiment resting period, 20 repetitions of the given task, and a 1-min post-experiment resting period. For the MI task, subjects were instructed to perform kinesthetic MI (left-hand or right-hand) continuously during the task period. Kinesthetic MI means imagining the opening and closing of hands. In the MA experiment, subjects were instructed to perform baseline (BS) or MA during the task period. BS indicates a state of cognitive inactivity during rest periods for the subject, while for the MA task, the subject was required to repeatedly

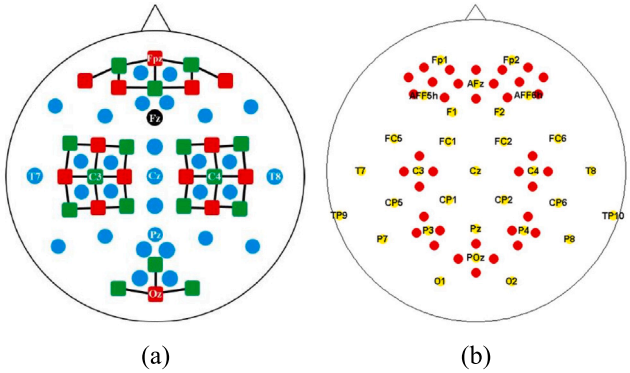

Fig. 1. Placement of EEG electrodes (blue and black circles), fNIRS sources (red squares), and detectors (green squares) in dataset-A, black solid lines denote fNIRS channels (a) *Source:* [30]. Placement of EEG electrodes (yellow circles) and fNIRS channels (red circles) in dataset-B (b).
Source: [34].

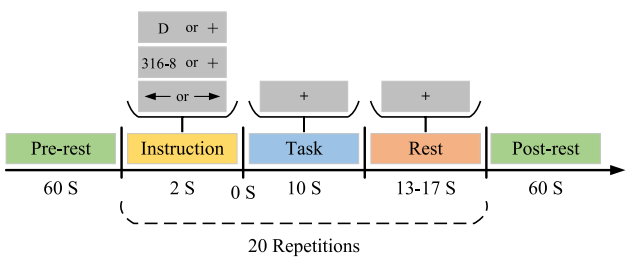

Fig. 2. Schematic sequence diagram of one session.

subtract the one-digit number from the three-digit number (e.g., 384 − 8). The schematic sequence diagram of one session is shown in Fig. 2.

The brain-imaging dataset-B [34] comprised EEG and fNIRS data acquired from a total of 26 subjects (9 males and 17 females, average age 26.1 ± 3.5 years). The valid EEG data comprise 28 channels sampled at 1000 Hz and subsequently downsampled to 200 Hz, while the fNIRS data consist of 36 channels sampled at 10.4 Hz and subsequently downsampled to 10 Hz. The placement of EEG and fNIRS channels is shown in Fig. 1(b). The task paradigm of dataset-B is the WG task. During the task period, the subjects were instructed to rapidly generate as many words as possible that began with the previously presented letter, and repetition was prohibited. For the BS condition, the subjects were asked to relax and maintain their gaze on the fixation cross. The timing sequence of the WG task is identical to that of dataset-A, as depicted in Fig. 2.

2.2. Data preprocessing

For the EEG signals, we first applied a band-pass filter (0.5–50.0 Hz) to remove high and low-frequency noise. Then the EEG signals were re-referenced to a common average. Finally, we employed Independent Component Analysis (ICA) [36] to remove the influence of non-brain artifacts.

For the fNIRS signals, concentration changes of deoxy- and oxy-hemoglobin (HbR and HbO) were first calculated by the modified Beer–Lambert law [37]. Thereafter, the HbO and HbR data were band-pass filtered (sixth-order zero-phase Butterworth filter [38] with a passband of 0.01–0.1 Hz). Baseline correction was performed by subtracting the average value between −5 and −2 s.

2.3. Data segmentation

For the EEG signals, we cropped 3 s EEG signals with a time step of 1 s during the −2–10 s interval (instruction and task periods) as done in [25,30,39]. Therefore, the size of a single EEG sample is 30 × 600 (channel × time).

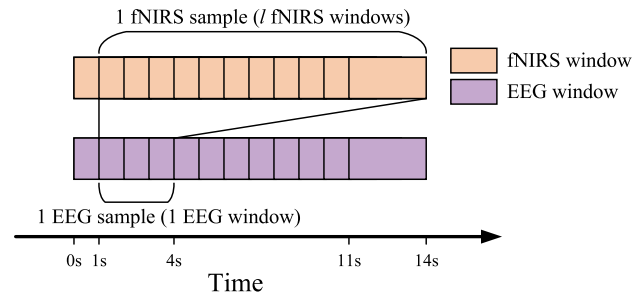

Fig. 3. Data segmentation diagram. The sliding time window is set to 3 s, with a step of 1 s. The EEG sample (1 EEG window), along with its corresponding fNIRS sample (l fNIRS windows, here $l = 11$).

For the fNIRS signals, just like EEG, we cropped 3 s fNIRS signals with a time step of 1 s, therefore, the size of a single fNIRS window is 36 × 30 × 2 (channel × time × HbR&HbO). Previous studies have demonstrated that the delay of fNIRS relative to EEG can extend up to 10 s [30], while EEG responses to neural activity exhibit near-instantaneous dynamics. Therefore, to identify the specific fNIRS signals corresponding to neural activity, we adopted the timestamp of the EEG sample as an anchor. Subsequently, we considered the fNIRS window at the anchor point, along with subsequent consecutive fNIRS windows, as the corresponding fNIRS sample for the EEG sample. Accordingly, the size of a single fNIRS sample is $l \times 36 \times 30 \times 2$ (fNIRS length × channel × time × HbR&HbO). The data segmentation diagram is depicted in Fig. 3.

2.4. 3D EEG-fNIRS tensor

To accurately represent the spatial position of the scalp, we performed a mapping procedure to align EEG and fNIRS signals with the corresponding locations on the scalp. For the EEG signals, a single frame of 1D EEG data was projected onto the scalp with size 16 × 16 azimuthal equidistant projection [40] to generate a 2D image. The empty values between the electrodes were subsequently filled in using cubic spline interpolation [41]. Accordingly, one EEG sample is converted into 3D EEG tensor $X_{eeg} \in \mathbb{R}^{16\times16\times600}$.

For the fNRIS signals, we employed a method similar to that of EEG to transform HbR and HbO data into 3D tensors. The fNIRS capture variations in blood oxygen along the path between the source and the detector. Therefore, the pixel of the path between the source and detector was filled with the same HbO or HbR value, the remaining empty pixels were filled using spline interpolation. Accordingly, one fNIRS sample is converted into $X_{fnirs} \in \mathbb{R}^{l\times16\times16\times30\times2}$.

3. Method

We propose a novel Spatial–Temporal Alignment Network (STA-Net) to achieve advanced hybrid EEG-fNIRS decoding. The overall framework of STA-Net is depicted in Fig. 4. The STA-Net mainly comprises three components: the 3D feature extractor, the EGTA layer, and the classifier. The 3D extractor captures the spatio-temporal features of EEG and fNIRS by 3D convolution and achieves spatial alignment between EEG and fNIRS signals by FGSA layer. The EGTA layer aligns fNIRS with EEG temporally, addressing the issue of disparate response times between the two signals to neural activity. The classifier aggregates the prediction scores from each modality and generates the final prediction output.

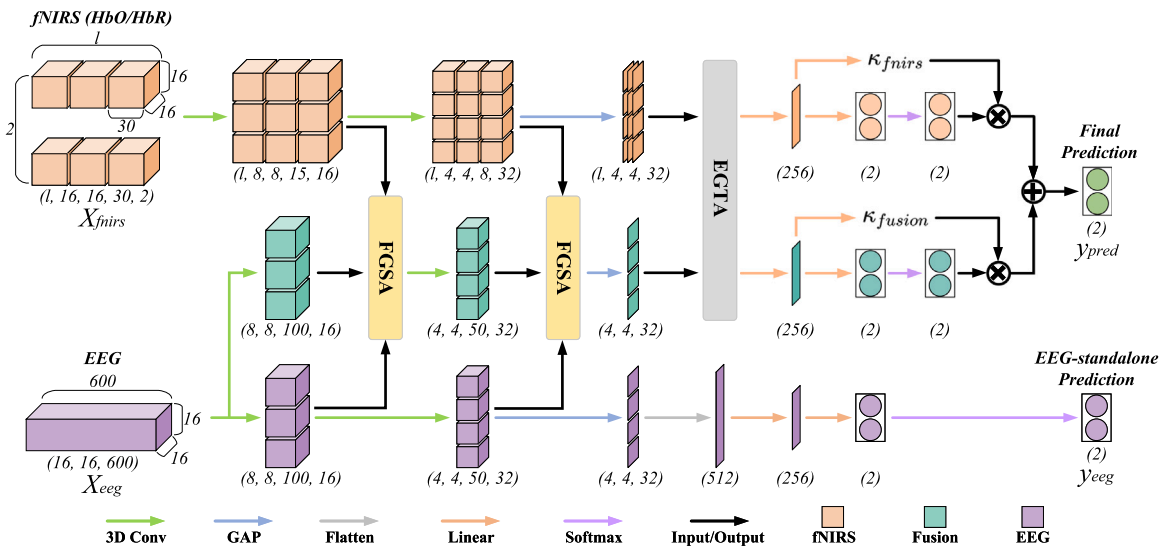

Fig. 4. Framework of STA-Net.

3.1. 3D feature extractor

To capture both spatial and temporal features of 3D-EEG and 3D-fNIRS tensors, as well as identify significant task-related brain regions from fNIRS, we conduct a 3D feature extractor. The extractor consists of three branches: the fNIRS branch, the EEG branch, and the fusion branch.

3.1.1. fNIRS branch

The function of this branch is to extract the spatio-temporal features of fNIRS. The input of this branch is a pre-processed fNIRS sample (HbO/HbR) X_{fnirs}.

The utilization of 3D convolution offers numerous advantages in the processing of video, 3D images, and medical images [42–44]. Specifically, it excels in capturing the temporal and spatial characteristics inherent to 3D data. Given that fNIRS data has been transformed into 3D tensors, the fNIRS branch encompasses two consecutive 3D convolution layers to learn spatio-temporal information from 3D fNIRS tensors. Note that the convolution parameters are shared among each fNIRS segment, thereby reducing the complexity of the parameters. After each convolution layer, batch normalization (BN) [45] is adopted to alleviate overfitting, and exponential linear unit (ELU) [46] activation function is utilized to enhance nonlinearity. To downsize the feature map, and simplify subsequent computations, we employ global average pooling along the temporal dimension. This branch outputs the extracted fNIRS sequence features $F_{fnirs} \in \mathbb{R}^{l\times4\times4\times32}$.

3.1.2. EEG branch

The objective of this branch is to learn the EEG-standalone spatio-temporal features. Similar to the fNIRS branch, the EEG branch also contains two consecutive 3D convolution layers with BN layer and ELU function. To mitigate computational and parameter complexity arising from the high sampling rate of EEG data, global temporal pooling is also employed to reduce the temporal dimension. The compressed EEG features $F_{eeg} \in \mathbb{R}^{4\times4\times32}$ are generated as the final output of this branch.

3.1.3. Fusion branch

The fusion branch is designed to extract the fusion representation of the 3D EEG and fNIRS tensors based on neurovascular coupling. The spatial resolution of fNIRS is superior to EEG because it captures deeper brain signals and is more resistant to artifacts and motion. To achieve the spatial alignment of EEG and fNIRS signals, inspired by [25], we employed the FGSA layer to extract important brain regions based on fNIRS data and generate corresponding EEG channels with weighted spatial attention. The structure of the FGSA layer is shown in Fig. 5. The input of the FGSA layer consists of 3D convolved feature maps in the three branches. The output of FGSA layer $\hat{F}_{fusion}$ is defined as

$$\hat{F}_{fusion} = \gamma \tilde{F}_{eeg} + (1-\gamma)\,\tilde{F}_{fusion} + \Phi \tilde{F}_{fusion}, \tag{1}$$

where $0 \le \gamma \le 1$ is a trainable residual parameter, $\tilde{F}_{eeg}$ and $\tilde{F}_{fusion}$ are the input feature maps of EEG and fusion, respectively, and $\Phi \in \mathbb{R}^{H\times W}$ is the spatial attention weights derived from fNIRS signals, obtained as

$$\Phi = \eta_{sig}\left(GAP\left(conv_{h,w,t}\left(\tilde{F}_{fnirs}\right)\right)\right), \tag{2}$$

where η_{sig} is the *Sigmoid* function, $\tilde{F}_{fnirs}$ is the input features maps of fNIRS, $conv_{h,w,t}$ represents the 3D convolution with one kernel size of $h\times w\times t$, and GAP represents global average pooling alone the sequence and time dimension.

In the fusion branch, an FGSA layer is applied after each 3D convolution layer. The output of the last FGSA layer is temporally averaged to obtain the fusion features $F_{fusion} \in \mathbb{R}^{4\times4\times32}$. Additionally, dropout [47] is adopted in the 3D extractor to alleviate the overfitting. The detailed parameters of the extractor are provided in Table 1.

Table 1
Parameters of 3D feature extractor.

Branch	Layer	Kernel		
		Size	Stride	Channel
EEG	Conv 1	2 × 2 × 13	2 × 2 × 6	16
	Conv 2	2 × 2 × 5	2 × 2 × 2	32
fNIRS	Conv 1	2 × 2 × 5	2 × 2 × 2	16
	Conv 2	2 × 2 × 3	2 × 2 × 2	32
Fusion	Conv 1	2 × 2 × 13	2 × 2 × 6	16
	FGSA 1	3 × 3 × 5	1 × 1 × 1	1
	Conv 2	2 × 2 × 5	2 × 2 × 2	32
	FGSA 2	3 × 3 × 3	1 × 1 × 1	1

3.2. EEG-guided temporal alignment layer

We propose an EEG-guided Temporal Alignment (EGTA) layer to achieve accurate adaptive timing alignment between EEG and fNIRS signals. The EGTA layer captures the temporal dependencies between EEG and fNIRS, generating the temporal weights of the fNIRS. Finally, the fNIRS sequence features are weighted and integrated to generate

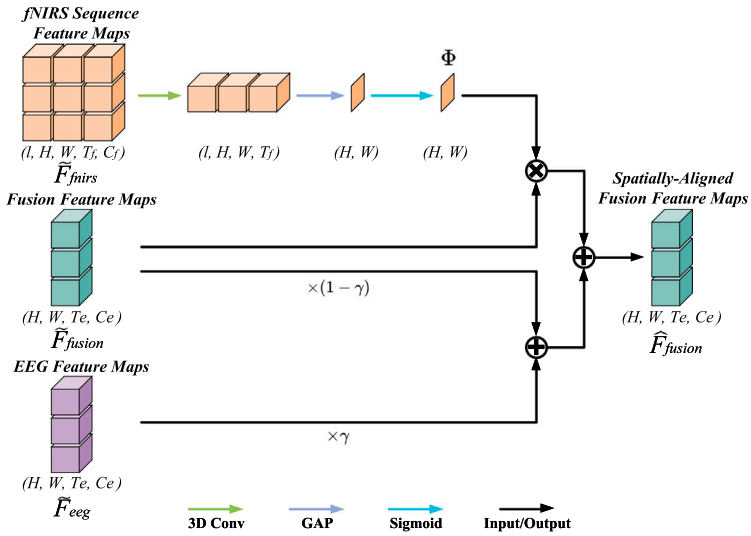

Fig. 5. Structure of FGSA layer.

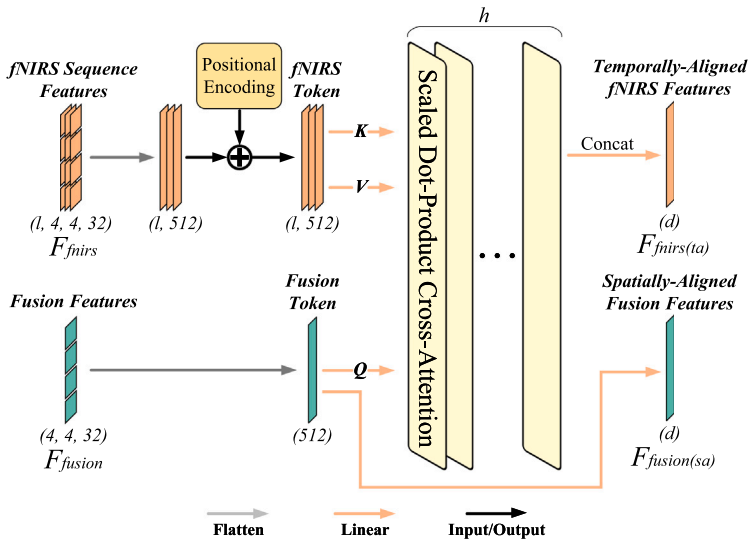

Fig. 6. Structure of EGTA layer.

temporally-aligned fNIRS feature maps with EEG. The architecture of the EGTA layer is shown in Fig. 6.

The input of EGTA layer consists of the extracted fNIRS sequence features F_{fnirs} and fusion features F_{fusion} from the 3D extractor. For the fNIRS sequence features F_{fnirs}, each feature segment in the sequence is flattened. Subsequently, given the necessity to ascertain the position of each fNRIS segment relative to the EEG, we add the flattened fNIRS features and positional encoding to obtain the fNIRS tokens. The positional encoding is a trainable parameter initialized by He uniform initializer [48], with size $(l, 512)$. The fusion features F_{fusion} do not require positional encoding due to the EEG position serving as the temporal anchor. This allows for direct flattening to obtain the fusion token, which is then linearly projected into d dimension as the final spatially-aligned fusion features $F_{fusion(sa)} \in \mathbb{R}^d$. As with the fusion branch, F_{eeg} is flattened directly to obtain the $F_{eeg(flat)}$.

In contrast to the instantaneous response of EEG, the neural activity feedback delay in fNIRS can extend up to 10 s [30]. Recognizing the significance of temporal synchronization between EEG and fNIRS signals, we propose that EEG-fNIRS temporal alignment can effectively capture neural activity-induced hemodynamic changes in fNIRS signals, thereby enhancing the performance of EEG-fNIRS hybrid BCI systems. In this context, we employ the cross-attention mechanism to capture temporal correlations between fNIRS signals at different time points and EEG signals at a specific reference time point. In Transformer, Q represents the input label at the current location to specify what to focus on, K represents the information of other labels in the input sequence, and V represents the actual information of the input sequence. By computing the similarity between Q and K, the transformer model dynamically learns the attention weights of Q to all K, subsequently applying these weights to V for generating a weighted output [49]. Accordingly, in the EGTA layer, the EEG-fusion data serves as the baseline, enabling the calculation of attention weights for all sequences of fNIRS segments and the baseline. Consequently, the fusion token is considered as Q while the fNIRS tokens are regarded as K and V. The fusion token and sequential fNIRS tokens are linearly transformed into equal-shaped triplicates. To employ the multi-head attention to further improve the diversity of model representation ability, the Q, K and V are equally split into h heads and fed into the scaled dot-product cross-attention blocks separately. In the cross-attention block, the scaled dot product is employed over Q and K to evaluate the correlations between different tokens. The correlations are passed through a *Softmax* function to obtain the EEG-fNIRS temporal attention scores, and then V

is interpolated by these attention scores. The process of a single scaled dot-product cross-attention block can be formulated as

$$Attention(Q,K,V)=\eta_{soft}\left(\frac{QK^T}{\sqrt{k}}\right)V, \tag{3}$$

where η_{soft} is the *Softmax* function, k denotes the dimension of K. The outputs of all heads are concatenated back to a single tensor, and then projected linearly into d dimension to obtain the final temporally-aligned fNIRS features $F_{fnirs(ta)}\in\mathbb{R}^d$. The process can be expressed as

$$\begin{aligned} F_{fnirs(ta)} &= fc_d\left(\left[head_0;\cdots;head_{h-1}\right]\right),\\ head_n &= Attention\left(Q_n,K_n,V_n\right) \end{aligned} \tag{4}$$

where fc_d is the fully connected (FC) layer with an output dimension of d, $[\cdot]$ represents feature concatenation, Q_n, K_n and V_n denote the query, key, and value in the nth head, respectively.

3.3. Classifier

The classifier, located at the end of the STA-Net, generates predicted scores for each branch and integrates them to output the final prediction. $F_{fusion(sa)}$, $F_{fnirs(ta)}$, and $F_{eeg(flat)}$ pass through two FC layers and *Softmax* function to generate the fusion-prediction y_{fusion}, fNIRS-prediction y_{fnirs}, and EEG-prediction y_{eeg}, respectively. Subsequently, we integrate the prediction scores obtained from multiple branches to generate the final prediction. As noted in [25], fNIRS exhibits poor performance at the beginning of tasks due to its inherent delay and is therefore not directly involved in final classification decisions. However, the EGTA layer effectively mitigates the inherent delay through the temporal alignment between EEG and fNIRS, thereby augmenting the confidence of fNIRS-standalone prediction scores. Consequently, fNIRS is also incorporated into the final prediction. In addition, the fusion branch is derived from the EEG signal, thereby excluding the direct involvement of the EEG signal in the final prediction. The final prediction is generated by the weighted sum of the prediction scores of the fusion branch and fNRIS branch as

$$y_{pred}=\kappa_{fusion}y_{fusion}+\kappa_{fnirs}y_{fnirs}, \tag{5}$$

where κ_{fusion} and κ_{fnirs} are the prediction weights of the two branches and defined as

$$\left[\kappa_{fusion},\kappa_{fnirs}\right]=\eta_{soft}\left(fc_1\left(\left[F_{fusion(fc)},F_{fnirs(fc)}\right]\right)\right), \tag{6}$$

where $F_{fusion(fc)}$ and $F_{fnirs(fc)}$ represent the output of the first FC layer of the fusion branch and fNIRS branch, $[\cdot]$ is a concatenation function for the first dimension, and $\left[\kappa_{fusion},\kappa_{fnirs}\right]\in\mathbb{R}^{2\times1}$ is the prediction weight vector transformed by the *Softmax* function.

3.4. Loss function

Since STA-Net contains multiple branches, the loss function is correspondingly composed of multiple parts: the classification loss L_{class}, the EEG classification loss L_{eeg}, the EGTA regularization loss L_{egta}, and the FGSA regularization loss L_{fgsa}. The total loss L is defined as

$$L=L_{class}+L_{eeg}+L_{egta}+L_{fgsa}, \tag{7}$$

3.4.1. Classification loss

The focus of STA-Net lies in the signal classification of hybrid BCI. Therefore, we apply the cross-entropy function to the final prediction scores as follows:

$$L_{class}=-\frac{1}{N}\sum_{i=1}^{N}y_i\cdot\log\left(y_{pred}\left(X_i^{eeg},X_i^{fnirs}\right)\right), \tag{8}$$

where $y_{pred}\left(X_i^{eeg},X_i^{fnirs}\right)$ and y_i are the prediction score and ground truth of the ith input $\left(X_i^{eeg},X_i^{fnirs}\right)$, and N is the number of input samples.

3.4.2. EEG classification loss

Given that fusion features are essentially derived from EEG data and further integrated with the EEG features in the FGSA layer, the performance of STA-Net is heavily contingent upon the discernibility of EEG features. However, only the classification loss L_{class} is not sufficient to train the EEG branch because the EEG features are not directly used in the final prediction. Therefore, to accelerate the training process, we add a cross-entropy loss function to train the EEG branch as follows:

$$L_{eeg}=-\frac{1}{N}\sum_{i=1}^{N}y_i\cdot\log\left(y_{eeg}\left(X_i^{eeg}\right)\right), \tag{9}$$

where $y_{eeg}\left(X_i^{eeg}\right)$ is the EEG-standalone prediction of the EEG branch for the input EEG X_i^{eeg}.

3.4.3. EGTA regularization loss

The objective of the EGTA layer is to generate fNIRS signals that exhibit the highest temporal correlation with EEG. Therefore, the Pearson correlation coefficient (PCC) is utilized as a metric for quantifying the correlation between EEG and fNIRS, and it is trained to maximize this correlation. The PCC is defined as

$$PCC(\boldsymbol{U},\boldsymbol{V})=\frac{\sum\left(U_i-\bar{U}\right)\left(V_i-\bar{V}\right)}{\sqrt{\sum\left(U_i-\bar{U}\right)^2}\sqrt{\sum\left(V_i-\bar{V}\right)^2}}, \tag{10}$$

where $\bar{U}$, $\bar{V}$ are the means of all observations of U, V, respectively. The PCC value ranges from −1 to 1. Therefore, L_{egta} is obtained as follows:

$$L_{egta}=1-\frac{1}{N}\sum_{i=1}^{N}\left|PCC\left(F_i^{fusion(sa)},F_i^{fnirs(ta)}\right)\right|, \tag{11}$$

where $|\cdot|$ represents taking the absolute value, $F_i^{fusion(sa)}$ and $F_i^{fnirs(ta)}$ are the spatially-aligned fusion features and temporally-aligned fNIRS features of the ith input, respectively.

3.4.4. FGSA regularization loss

The purpose of the FGSA layer is to generate EEG signals that exhibit the highest spatial correlation with fNIRS. Therefore, similar to the EGTA regularization loss, we apply PCC as the correlation measure. Correspondingly, L_{fgsa} is calculated as follows:

$$L_{fgsa}=1-\frac{1}{2N}\sum_{i=1}^{N}\sum_{l=1}^{2}\left|PCC\left(\bar{F}_{i,l}^{eeg},\boldsymbol{\Phi}_{i,l}\right)\right|, \tag{12}$$

where $\bar{F}_{i,l}^{eeg}\in\mathbb{R}^{H\times W}$ and $\boldsymbol{\Phi}_{i,l}$ are the time-channel-averaged EEG feature maps and spatial attention maps of the lth FGSA layer of the ith input, respectively.

4. Result

4.1. Experimental setup

The benchmark datasets and data segmentation are described in Section 2. Given the balanced sample distribution and binary classification, we use accuracy (ACC) and Kappa as performance metrics. Kappa is calculated with

$$Kappa=\frac{acc-p_0}{1-p_0}, \tag{13}$$

where acc is the accuracy of testing, and p_0 is the random level accuracy.

To better capture individual fNIRS delay variability, we conducted a subject-specific evaluation. For each subject, to understand the influence of inter-session variability on classification performance and validate the generalization of STA-Net in cross-session classification, where it remains capable of extracting discriminative features, we conducted a Hold Out (HO) analysis. In HO analysis, one session was designated as the test set while the remaining two sessions were utilized

Table 2
Overall performance (mean ± std).

Methods	Signal	MI		MA		WG	
		Accuracy (%)	Kappa	Accuracy (%)	Kappa	Accuracy (%)	Kappa
Conformer [2]	EEG	65.89 ± 12.96	0.32 ± 0.26	82.98 ± 9.05	0.66 ± 0.18	77.88 ± 9.48	0.56 ± 0.19
LMDA [3]	EEG	65.17 ± 12.41	0.30 ± 0.25	81.68 ± 8.79	0.63 ± 0.18	75.75 ± 10.27	0.52 ± 0.21
fNIRSNet [4]	fNIRS	62.63 ± 6.26	0.25 ± 0.13	73.79 ± 9.61	0.48 ± 0.19	67.78 ± 7.95	0.36 ± 0.16
fNIRS-Transformer [5]	fNIRS	59.83 ± 5.52	0.20 ± 0.11	69.50 ± 8.32	0.39 ± 0.17	64.56 ± 6.93	0.29 ± 0.14
FGANet [25]	EEG+fNIRS	64.95 ± 8.65	0.30 ± 0.17	76.58 ± 9.00	0.53 ± 0.18	71.33 ± 9.01	0.43 ± 0.18
EF-Net [20]	EEG+fNIRS	61.80 ± 8.04	0.24 ± 0.16	75.59 ± 9.55	0.51 ± 0.19	68.51 ± 9.30	0.37 ± 0.19
BiMNC [19]	EEG+fNIRS	67.25 ± 7.37	0.34 ± 0.15	82.36 ± 9.24	0.65 ± 0.18	76.86 ± 10.22	0.54 ± 0.20
M2NN [21]	EEG+fNIRS	66.21 ± 9.85	0.32 ± 0.20	82.72 ± 7.30	0.65 ± 0.15	76.07 ± 9.87	0.52 ± 0.20
EFMLNet [22]	EEG+fNIRS	66.92 ± 8.99	0.34 ± 0.18	83.14 ± 7.64	0.66 ± 0.15	77.49 ± 9.05	0.55 ± 0.18
Dual-EEGNet [50]	EEG+fNIRS	66.22 ± 7.86	0.32 ± 0.16	78.27 ± 8.22	0.57 ± 0.16	73.53 ± 10.14	0.47 ± 0.20
E-FNet [51]	EEG+fNIRS	64.91 ± 7.51	0.30 ± 0.15	83.66 ± 7.87	0.67 ± 0.16	76.74 ± 9.89	0.53 ± 0.20
STA-Net	EEG+fNIRS	**69.65 ± 9.52**	**0.39 ± 0.19**	**85.14 ± 7.17**	**0.70 ± 0.14**	**79.03 ± 8.41**	**0.58 ± 0.17**

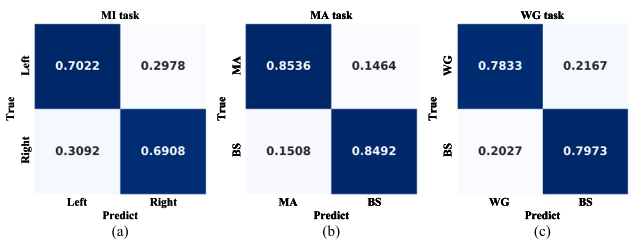

Fig. 7. Confusion matrix of STA-Net for the MI (a), MA (b), and WG tasks (c).

as training data, and the iteration was repeated three times until each session was used as the test set. For each iteration, a two-stage training strategy [52] was implemented, and the training data was further partitioned into a training set and a validation set in a 4:1 ratio [53]. In the first stage, the model was trained using only the training set with the early stopping criteria whereby the validation accuracy was monitored and training was stopped if there was no increase in the validation accuracy for consecutive 50 epochs. After reaching the stopping criteria, network parameters with the best validation accuracy were restored. In the second stage, the training procedure was continued with all training data. The second stage of training was stopped when the training loss was reduced below the training loss of the first stage. Subsequently, the training was concluded and the model underwent evaluation on the test set. To avoid the case of infinite training, we set the maximum training epoch to 300 and 200 for training stages 1 and 2 respectively. The results for each subject are the average of three iterations, and the overall performance results of STA-Net are the average across all subjects.

We utilized the Adam optimizer [54] to train the network parameters with a learning rate of 0.001. The initial trainable residual parameter γ was set to zero. The 10-fold cross-validation was employed on the training data to fine-tune the hyperparameters. Finally, the optimal parameters of the 3D feature extractor are determined as provided in Table 1, the number of attention heads h is set to 10, the output dimension of EGTA layer d is set to 256, and the fNRIS length l is set to 11.

In this manner, the performance of STA-Net was compared with other state-of-the-art (SOTA) unimodal and multimode BCI algorithms. All methods were implemented using the optimal settings corresponding to the sampling rate of the datasets and employed identical training procedures and evaluation strategy as STA-Net.

4.2. Performance comparison

4.2.1. Overall performance

The overall performance of STA-Net was compared to that of other baseline algorithms, and the results are summarized in Table 2. The statistical significance of differences in performance metrics was evaluated using paired t-tests, and the p-values were corrected with the Benjamini–Hochberg correction to control the false discovery rate. From Table 2, it can be observed that STA-Net achieved the best performance in all metrics for all tasks. For the MI task, compared with the best-performing algorithm, STA-Net improves the accuracy by 2.40% ($p < 0.05$). Regarding the MA task, STA-Net also acquired the best classification results (exhibiting statistical significance in contrast to all other algorithms), and the accuracy rate was increased by 1.48% compared to E-FNet ($p < 0.05$). For the WG task, except for Conformer, STA-Net demonstrates statistically significant improvements in classification performance compared to all other algorithms. Additionally, its accuracy rate surpasses that of the best-performing SOTA fusion algorithm by 1.54% ($p < 0.05$). Furthermore, the detailed results for each subject are provided in the supplementary material.

Fig. 7 shows the confusion matrix of STA-Net in the three tasks. It is evident that across all three tasks, the classification performance of STA-Net is well-balanced, with precision and recall metrics being consistently close for all classes within each task.

4.2.2. Performance of time segments

To evaluate the dynamic performance of the model, we calculate the individual accuracy of the sliding window at each temporal position within a trial. The mean accuracy of various timing segments on the sliding time window across all trials is illustrated in Fig. 8, where the x-axis indicates the right edge of the sliding time window, for example, 6 represents the 3–6 s window.

From Fig. 8, for all tasks, the accuracy of nearly all algorithms exhibits a gradual increase within the initial 3 s, as certain time windows encompass instruction period data up to the third second. After 3–4 s, the EEG-based algorithms reach a saturation point, with no further improvement in performance and occasional fluctuations. In contrast, except for the fNIRS-Transformer in the MI task, the performance of fNRIS-based algorithms exhibits a continuous improvement until approximately the seventh second, particularly in the MA task. This suggests that hemodynamic response exhibits a natural temporal delay in comparison to electrical response, particularly evident during the MA task. As illustrated in Fig. 8, STA-Net demonstrates superior performance across nearly all time points for all tasks. Moreover, compared to other hybrid algorithms using fNIRS signals, STA-Net shows superior performance within the initial 5 s due to the EGTA layer improving suboptimal performance caused by delayed fNIRS signals during early task stages.

We analyzed the variation of prediction weights κ_{fusion} and κ_{fnirs} under the moving time window, as shown in Fig. 9. As observed across all tasks, κ_{fnirs} remains largely constant over time, with only minor fluctuations. This indicates that the EGTA layer achieves temporal alignment, ensuring that fNIRS signals maintain equivalent predictive value throughout the entire task period. Moreover, κ_{fusion} is notably

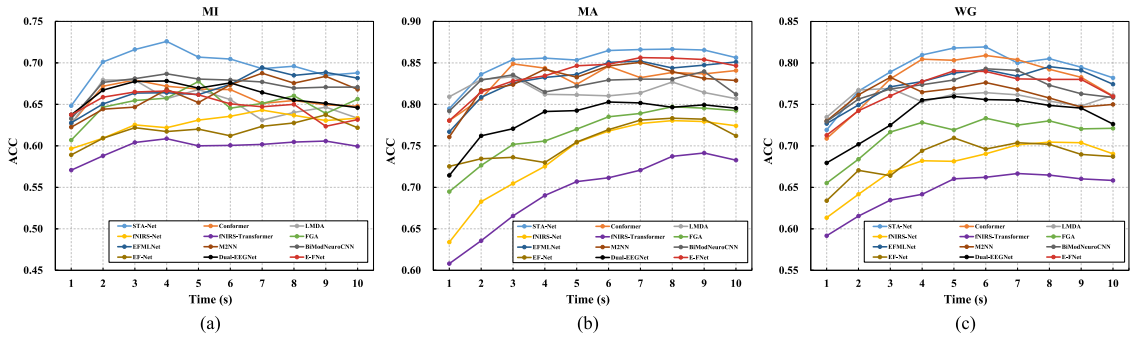

Fig. 8. Mean individual accuracy of the sliding window at each time point for the MI task (a), MA task (b), and WG task (c), the x-axis represents the right edge of the sliding window.

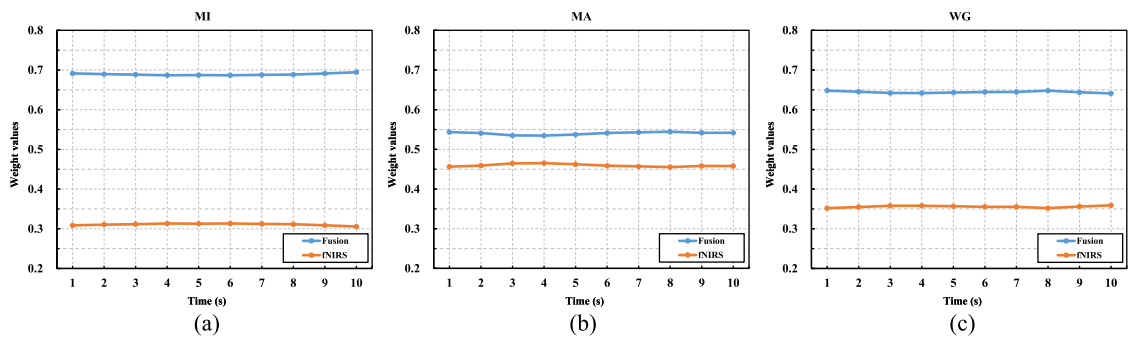

Fig. 9. Prediction weights κ_{fusion} and κ_{fnirs} for the three tasks with the moving window.

Table 3
Performance of multimodal signals and unimodal signals in the three tasks (mean ± std).

Task	Signal	Accuracy (%)	Kappa
MI	EEG	67.07 ± 11.31	0.34 ± 0.23
	fNIRS	60.47 ± 6.37	0.21 ± 0.13
	EEG+fNIRS	**69.65 ± 9.52**	**0.39 ± 0.19**
MA	EEG	80.52 ± 8.26	0.61 ± 0.17
	fNIRS	70.17 ± 7.87	0.40 ± 0.16
	EEG+fNIRS	**85.14 ± 7.17**	**0.70 ± 0.14**
WG	EEG	76.72 ± 8.51	0.53 ± 0.17
	fNIRS	64.88 ± 7.01	0.30 ± 0.14
	EEG+fNIRS	**79.03 ± 8.41**	**0.58 ± 0.17**

larger than κ_{fnirs} in the MI and WG tasks, while in the MA task, κ_{fnirs} is closer to κ_{fusion}. This suggests that, in the MI and WG tasks, EEG signals contribute more significantly to classification and are more crucial, whereas in the MA task, the predictive value of both signal types is more balanced.

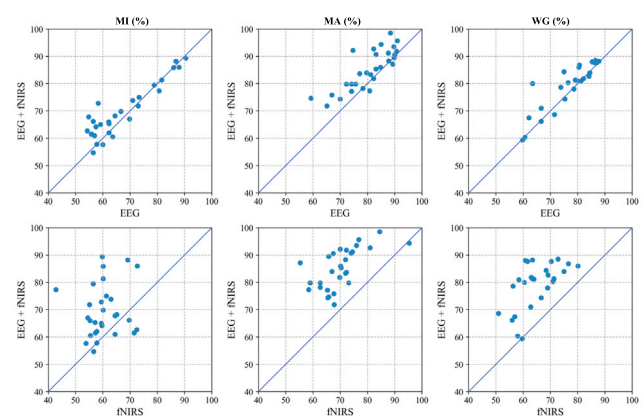

Fig. 10. Scatter plots of classification accuracy of each subject. Each scatter point corresponds to an individual subject, with the horizontal axis representing unimodal accuracy and the vertical axis denoting multimodal accuracy.

4.3. Ablation study

4.3.1. Multimodal versus unimodal

This section analyzes the results of the EEG-standalone branch and the fNIRS-standalone branch. Given that the fundamental principle of the EGTA layer is to allocate distinct weights to asynchronous fNIRS segments, we removed the EGTA layer and substituted it with an averaging operation, equivalent to assigning uniform weight to each segment. Additionally, we removed the classification weight κ_{fnirs}. The results are presented in Table 3. The paired t-test with Bonferroni correction confirms a significant improvement in the multimodal performance in all tasks ($p < 0.05$). The findings indicate that the integration of EEG and fNIRS signals greatly enhances the performance.

The unimodal and multimodal accuracies of each subject were visualized using scatter plots, as illustrated in Fig. 10. It is evident that in the three tasks, the majority of scatter points are located in the upper half of the plot, indicating that for most subjects, the accuracy of multimodal exceeds that of unimodal.

According to Fig. 11, the multimodal fusion STA-Net demonstrates the highest accuracy across all temporal segments. Moreover, multimodal fusion effectively mitigates the issue of suboptimal trial-early performance arising from the delay of fNIRS signals.

4.3.2. Ablation on sub-layers of STA-Net

To examine the influence of various sub-layers on performance, we conduct an ablation experiment targeting the sub-layers of STA-Net as provided in Table 4. In the MI task, when FGSA layers were removed, the accuracy decreased by 2.14% ($p < 0.05$). Furthermore, upon the removal of the EGTA layer, a notable decline in accuracy was observed, with a value of 5.79% ($p < 0.001$). For the MA task, the removal of

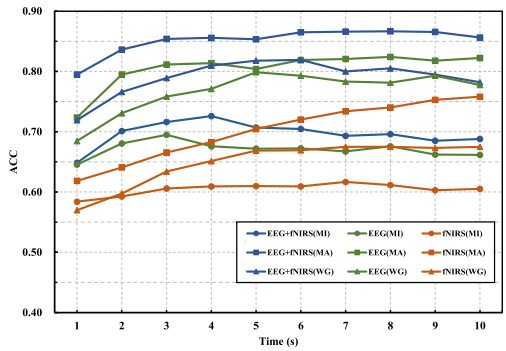

Fig. 11. Mean individual accuracy of the sliding window for multimodal and unimodal signals in the three tasks.

Table 4
Ablation study on the sub-layers of STA-Net in the three tasks (mean ± std).

Task	Model	Accuracy (%)	Kappa
MI	No FGSA	67.51 ± 6.65	0.35 ± 0.13
	No EGTA	63.86 ± 6.76	0.28 ± 0.14
	STA-Net	**69.65 ± 9.52**	**0.39 ± 0.19**
MA	No FGSA	84.35 ± 6.90	0.69 ± 0.14
	No EGTA	82.72 ± 8.36	0.65 ± 0.17
	STA-Net	**85.14 ± 7.17**	**0.70 ± 0.14**
WG	No FGSA	78.78 ± 9.67	0.58 ± 0.19
	No EGTA	73.54 ± 9.11	0.47 ± 0.18
	STA-Net	**79.03 ± 8.41**	**0.58 ± 0.17**

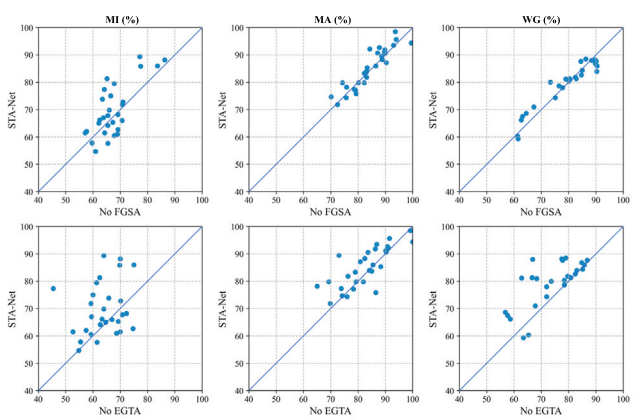

Fig. 12. Scatter plots of classification accuracy of each subject. Each scatter point corresponds to an individual subject, with the horizontal axis representing the accuracy after ablation and the vertical axis denoting the accuracy before ablation.

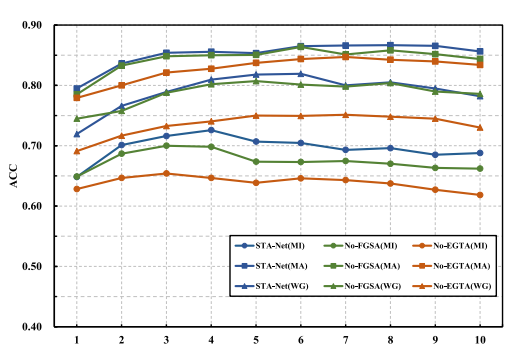

Fig. 13. Mean individual accuracy of the sliding window for the ablation on the sub-layers in the three tasks.

the FGSA layer resulted in a 0.79% decrease in accuracy, however, no statistically significant difference was observed; while the exclusion of the EGTA layer led to a 2.42% decrease in accuracy with significant difference ($p < 0.05$). Regarding the WG task, the elimination of the FGSA layer resulted in a minor performance deterioration, yet it was not statistically significant. Whereas, the removal of the EGTA layer would lead to a substantial decline in accuracy by 5.49% ($p < 0.001$). These results highlight the effectiveness of both FGSA and EGTA layers, especially the EGTA layer. We hypothesize that the impact of FGSA is limited due to the inherent high separability of EEG, whereas the intrinsic low discriminability of fNIRS, caused by its internal neurovascular coupling delay, is significantly enhanced by EGTA layer through the generation of synchronized fNIRS features with EEG. We plotted the accuracy of each subject under different ablation conditions using scatter plots in Fig. 12. It can be observed that after ablating the EGTA layer, the majority of scatter points are located in the upper half of the plot, indicating that the EGTA layer contributes significantly to the performance for most subjects. As illustrated in Fig. 13, the absence of the EGTA layer led to a noticeable decrease in accuracy across nearly the entire task period for all tasks, highlighting the critical role of the EGTA layer in enhancing classification performance by temporally aligning EEG and fNIRS signals.

We also employed t-SNE [55] to visualize the feature distribution of EEG and fNIRS. The features extracted from the fusion and fNIRS branches for Subject S25 (from dataset-A) and Subject S22 (from dataset-B) were projected into a 2D space and visualized in Fig. 14. The presence of EGTA layer reduces intra-category distance, increases inter-category distance, and clarifies category boundaries in fNIRS features. Conversely, in the absence of the EGTA layer, the distributions of the two categories appear more diffuse with no distinct boundary between them. This suggests that the EGTA layer makes the fNIRS features more discriminative, explaining the observed performance enhancement. In addition, the discriminative capability of EEG-Fusion features remains strong regardless of the FGSA layer, explaining the greater performance boost with the EGTA layer compared to the FGSA layer.

4.3.3. Ablation on sub-parts of loss function

Given that the loss function comprises multiple components, we conducted ablation experiments to evaluate the contribution of each individual component to the overall performance improvement, with the results presented in Table 5. The removal of L_{eeg} results in a significant decrease in accuracy for both the MI and MA tasks ($p < 0.05$), suggesting that supplementary training of the EEG branch plays a key role in enhancing overall classification performance. When L_{egta} component is removed, there is a noticeable decrease in accuracy for both the MI and MA tasks ($p < 0.05$), indicating that maximizing the temporal correlation between EEG and fNIRS signals enhances the performance of the EGTA layer. However, the elimination of L_{fgsa} was statistically significant only for the MI task ($p < 0.05$), which may be attributed to the limited influence of the FGSA layer on the performance of MA and WG tasks, as presented in Table 4.

Additionally, to investigate the training pattern of losses, we present the average changes in each loss component on both the training set and validation set throughout the first training stage, as illustrated in Fig. 15. Due to the varying number of epochs in early stopping, we uniformly trained models and monitored losses for a fixed duration of 300 epochs. As shown in Fig. 15, the training losses for the three tasks exhibit similar patterns. Specifically, the PCC-based losses L_{egta} and L_{fgsa} converge rapidly, whereas the cross-entropy-based losses L_{eeg} and L_{class} converge more slowly. This difference in convergence rates results in the total loss L converging around 150 epochs. The validation loss trends for the three tasks also exhibit similar patterns, with the total loss L converging after approximately 20 epochs. Prolonged training beyond this point tends to result in overfitting; hence, early stopping is generally applied around 50 epochs during the first training stage.

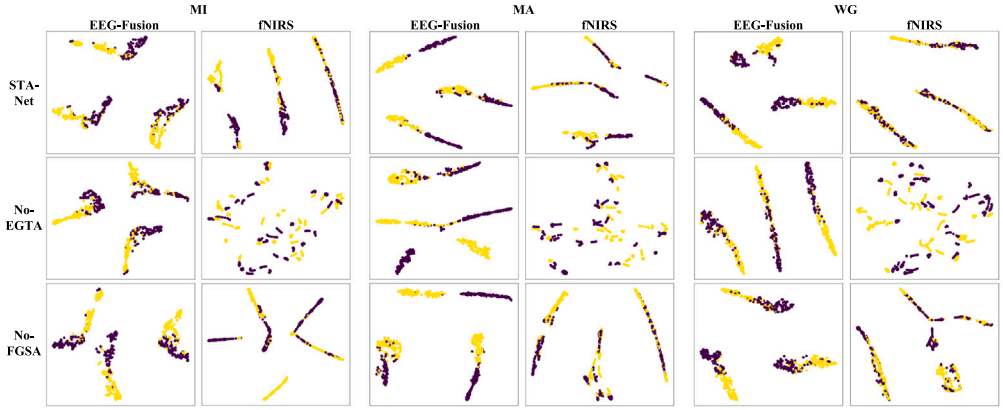

Fig. 14. Feature distribution of Subject S25 from dataset-A and Subject S22 from dataset-B visualized by t-SNE, which demonstrates the significant effect of the EGTA layer on enhancing the discriminability of fNRIS features.

Table 5
Ablation study on the sub-parts of the loss function (mean ± std).

Task	Loss function	Accuracy (%)	Kappa
MI	No L_{eeg}	68.12 ± 8.74	0.36 ± 0.17
	No L_{egta}	67.99 ± 8.41	0.36 ± 0.17
	No L_{fgsa}	66.19 ± 7.97	0.32 ± 0.16
	L	**69.65 ± 9.52**	**0.39 ± 0.19**
MA	No L_{eeg}	83.65 ± 7.48	0.67 ± 0.15
	No L_{egta}	83.79 ± 7.34	0.68 ± 0.15
	No L_{fgsa}	84.81 ± 7.92	0.70 ± 0.16
	L	**85.14 ± 7.17**	**0.70 ± 0.14**
WG	No L_{eeg}	78.00 ± 9.06	0.56 ± 0.18
	No L_{egta}	77.90 ± 8.84	0.56 ± 0.18
	No L_{fgsa}	77.60 ± 8.98	0.55 ± 0.18
	L	**79.03 ± 8.41**	**0.58 ± 0.17**

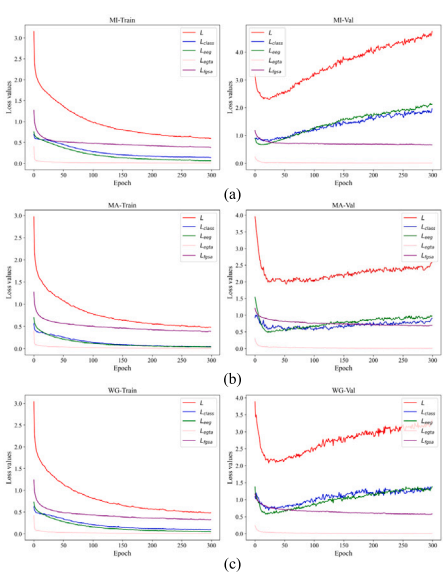

Fig. 15. Average training and validation losses of the MI task (a), MA task (b), and WG task (c) in the first training stage.

4.4. Computational complexity of STA-Net

To investigate the model complexity of STA-Net and its internal components, we systematically analyzed the number of parameters, inference time, and training time under various conditions, as summarized in Table 6. For reference, using an RTX 4070 GPU, the inference time represents the average time per run over 1000 classification iterations (excluding preprocessing time), and the training time denotes the average duration required to train a single epoch. As presented in Table 6, the model parameters and inference times for the individual branches are comparable. However, the training time for the EEG-Branch is notably longer, likely due to the larger data size associated with the high sampling rate of EEG signals. Furthermore, it can be observed that the majority of the parameters in STA-Net are attributable to the EGTA layer, while the FGSA layer demands more training time.

Table 6
Computational complexity indicators of STA-Net in various working conditions. T_{train1} denotes the time to train a single epoch in the first stage of training, T_{train2} denotes the time to train a single epoch in the second stage of training, and T_{infer} denotes the time to infer a single sample.

Conditions	Total params	T_{infer} (ms)	T_{train1} (ms)	T_{train2} (ms)
STA-Net	3,325,150	27.16	656.38	666.42
EEG-Branch	143,154	4.19	201.69	218.21
fNIRS-Branch	138,866	3.91	59.62	64.73
No EGTA	427,230	22.86	641.28	653.86
No FGSA	3,180,503	15.22	328.61	339.14

4.5. Feature visualization

4.5.1. Temporal attention maps

The key improvement of STA-Net is the addition of the cross-attention-based EGTA layer for learning the temporal dependencies between EEG and fNIRS. To illustrate the explainability of STA-Net, validate the capability of the EGTA layer in capturing temporal correlations, and gain insights into the distribution of temporal weights, we visualize the temporal weight maps generated by the EGTA layer. For each subject, we separately extract the generated temporal weights in the testing phase of each iteration of the testing session. Subsequently, we calculate the temporal weight distribution for the subject by averaging the temporal weights generated from all test sessions across three iterations.

The temporal weight distribution for each subject is depicted in Fig. 16. Obviously, there is significant variation in the temporal weight distributions of different subjects performing the same task. For instance, the weight in the MI task is mainly concentrated on the fourth fNIRS segment for Subject S11, suggesting a fNIRS delay of approximately 3 s compared to the EEG signal. However, for Subject S2, the weight is mainly concentrated on the eighth fNIRS segment, indicating a potential fNIRS delay of around 7 s relative to EEG. These findings demonstrate the variability of fNIRS delay across different subjects [35]. For the same subject, the temporal weight distribution also varies across different paradigm tasks. For example, Subject S13

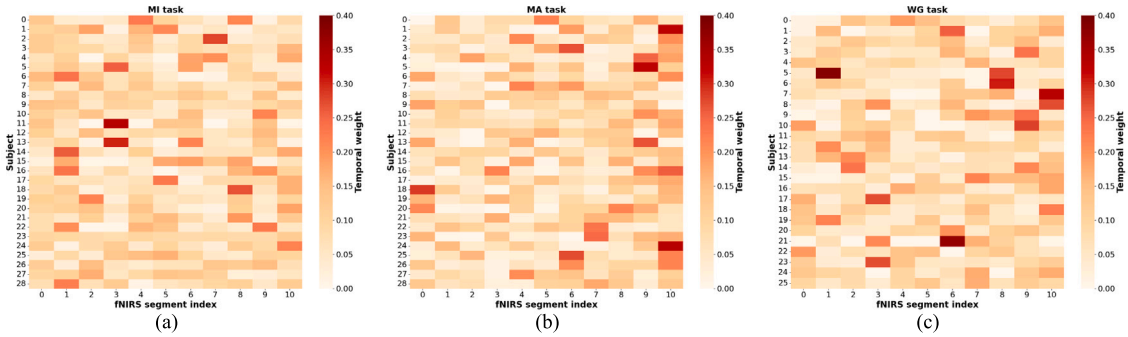

Fig. 16. Average temporal weight distribution of each subject in the MI (a), MA (b), and WG (c) tasks. The vertical axis represents the subject index, while the horizontal axis corresponds to the fNIRS segment index within the fNRIS sample. The colors indicate temporal weights, with darker shades indicating higher weights and a stronger correlation between the fNIRS segment and the EEG sample.

exhibits a higher weighting on the fourth fNIRS segment during the MI task, whereas the weighting is greater towards the latter fNIRS segments during the MA task. These findings validate that the latency of fNIRS exhibits variability across different cognitive tasks [30,34]. The variability of fNIRS delay highlights the importance of the adaptive extraction of EEG-fNIRS temporal correlations by the EGTA layer, rather than relying on fixed delay values directly.

To elucidate the physiological basis of fNIRS delay and validate it with the temporal weighting distribution, we analyze the dynamic changes in HbO and HbR during tasks. According to the well -established cerebral neural mechanism, the region associated with MI is located within the motor areas of the bilateral parietal lobes, whereas the region relevant to MA and WG is situated in the parietal and frontal lobes [30,34,56]. We partition the original fNIRS channels according to brain regions and compute their averages to illustrate the hemodynamic changes in each specific brain region. Furthermore, we calculate the average concentration changes of HbO and HbR in these task-specific brain regions during the task periods for Subject S11 (dataset-A), Subject S13 (dataset-A), and Subject S5 (dataset-B), as shown in Fig. 17. From Fig. 17(a), it can be seen that the HbO of Subject S11 reaches its peak approximately 3 s after MI task onset. As depicted in Fig. 17(b), it is evident that the HbO of Subject S13 reaches its minimum level around the ninth second after MA task onset. It can be observed from Fig. 17(c) that for Subject S5, the HbO levels in most brain regions reach their minimum approximately 1–2 s after task onset and peak around 6–9 s post-onset. Given the almost instantaneous EEG response to the tasks, these findings offer physiological evidence that Subject S11 exhibits a 3 s delay in fNIRS compared to EEG during the MI task, which is consistent with the temporal weight distribution of Subject S11 in Fig. 16(a). Subject S13 exhibits a 9 s delay in fNRIS compared to EEG during the MA task, which also validates the temporal weight distribution of Subject S13 shown in Fig. 16(b). For Subject S5, during the WG task, the most pronounced changes in brain blood oxygenation occur around 1 s and 8 s after task onset. Correspondingly, the temporal weights in Fig. 16(c) suggest that the EGTA layer assigns significantly higher weights to these two time points. The physiological indicators have verified the temporal weight distribution generated by the EGTA layer, enhancing its interpretability and demonstrating its adaptive learning ability to capture temporal dependencies between EEG and fNIRS for different subjects and tasks.

4.5.2. Spatial attention maps

We visualized the feature differences between classes and the spatial attention maps generated by the FGSA layers, as depicted in Fig. 18. Paired t-tests were performed on the data from all subjects, with the resulting t-values serving to quantify the average differences in the fusion features $\tilde{F}_{fusion}$ between classes. Taking the MI task as an example, the red regions indicate that the feature values for the left-hand category are greater than those for the right-hand category, while

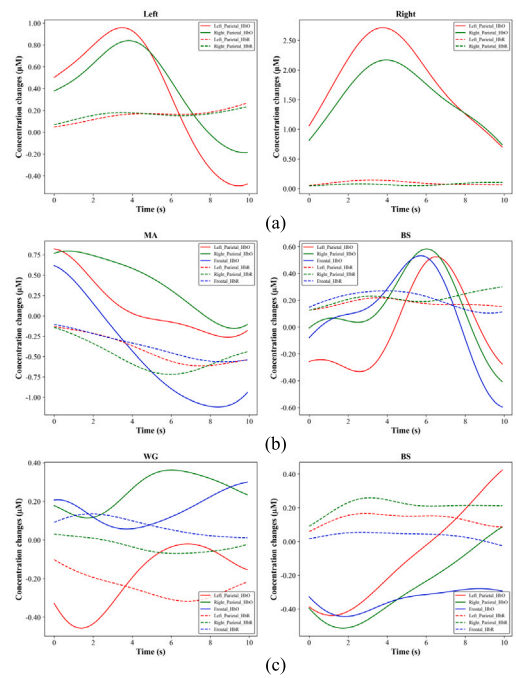

Fig. 17. Average hemodynamic changes of Subject S11 (from dataset-A) during the MI task period (a), Subject S13 (from dataset-A) during the MA task period (b), and Subject S5 (from dataset-B) during the WG task period (c).

the blue regions indicate the opposite. The spatial attention maps were visualized using grayscale images, where white indicates a higher weight assigned to the region by the FGSA layers.

In the MI task, the t-values on the left are positive, while those on the right are negative, suggesting that during left-hand MI, feature values in the left hemisphere are significantly higher than those in the right hemisphere, and conversely, during right-hand MI. Studies have indicated that during MI, the EEG amplitude in the ipsilateral brain regions increases [30,57]. The feature distribution of MI tasks in Fig. 18 is consistent with this physiological pattern, demonstrating that STA-Net effectively captures the EEG differences between left-hand and right-hand MI. In addition, the differences in the fusion features were also reflected in the spatial attention maps. For instance, during left-hand MI, the left hemisphere exhibited significantly higher weights, indicating that the FGSA layer can effectively highlight sensitive brain regions. For both MA and WG tasks, the pattern of feature differences aligns with previous studies, demonstrating that mental tasks are closely associated with frontal lobe activity [30,34]. Furthermore, under the task conditions of MA and WG, the FGSA layer assigns significantly higher weights to the frontal lobe.

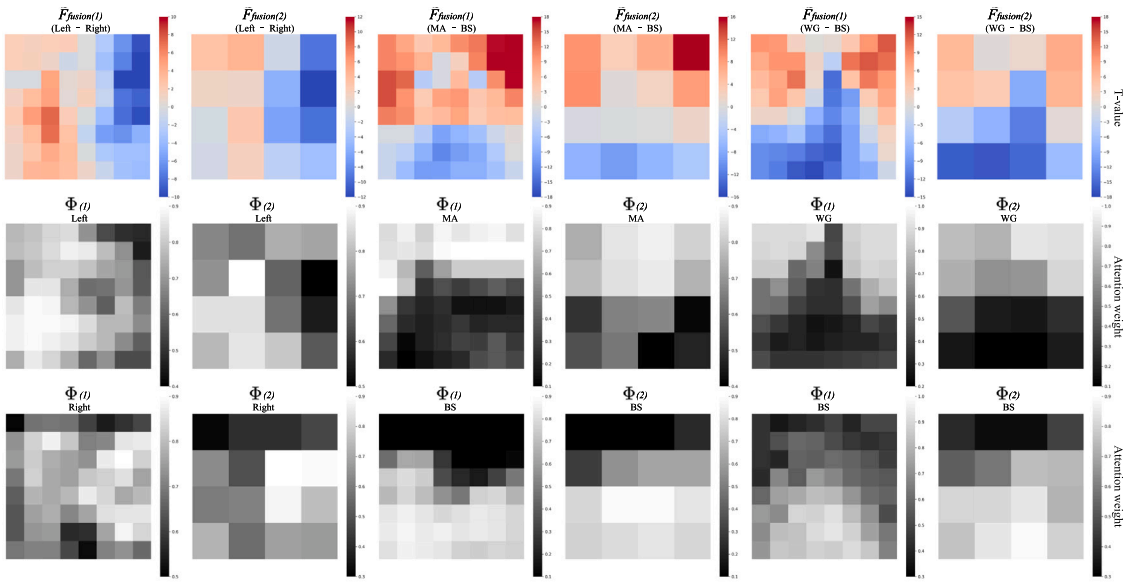

Fig. 18. Inter-class differences in the fusion features $\tilde{F}_{fusion}$ and the spatial attention maps $\boldsymbol{\Phi}$ for the three tasks. $\tilde{F}_{fusion(1)}$ and $\boldsymbol{\Phi}_{(1)}$ represent the fusion features and spatial attention maps of the first FGSA layer, while $\tilde{F}_{fusion(2)}$ and $\boldsymbol{\Phi}_{(2)}$ represent those of the second FGSA layer, respectively.

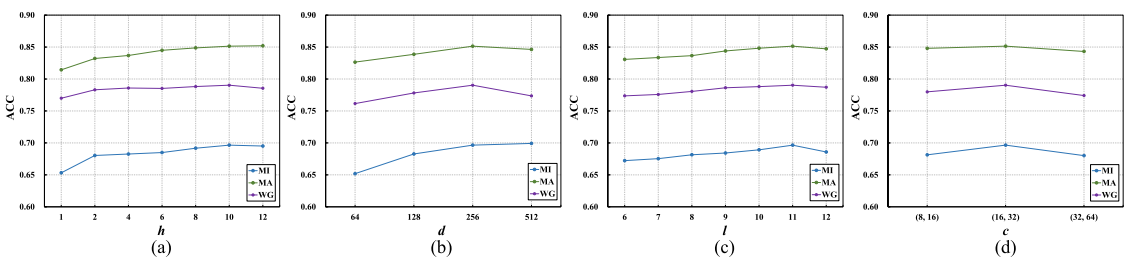

Fig. 19. Influence of the number of attention heads h (a), the output dimension of the EGTA layer d (b), the fNRIS length l (c), and the combination of kernel channels c (d).

4.6. Parameter sensitivity

We assess the influence of several key parameters on the STA-Net. These include the number of attention heads h, the output dimension of the EGTA layer d, the fNRIS length l, and the combination of kernel channels c. We employed one-way analysis of variance (ANOVA) to evaluate the statistical significance of the impact of parameters on performance, followed by Tukey's post-hoc test to analyze differences among various parameter values.

The number of heads is an important parameter, multiple heads can help learn features from different aspects. We compare the performance of different numbers of heads in Fig. 19(a). The accuracy of single-head is the lowest, whereas, with h reaching 2, there is a significant enhancement in the performance of all tasks. Statistical analysis indicates that in the MI task, the result of 10-head exhibits significant differences with 1-, 2-, and 4-head ($p < 0.05$). In the MA task, the result of 10-head demonstrates significant differences with 1-, 2-, and 4-head ($p < 0.05$). For the WG task, statistical significance was identified exclusively between the 10-head and the single-head ($p < 0.05$). These results indicate that the multi-head attention significantly improves performance, but increasing the number of heads eventually reaches a saturation point.

We analyze the performance of different output dimensions of the EGTA layer, as shown in Fig. 19(b). For all tasks, the trend of accuracy concerning d is similar: accuracy initially increases with d, then levels off after reaching 256, with no further statistically significant improvement ($p > 0.05$). This indicates that appropriately increasing d enhances the representational capacity and performance, but it eventually reaches a saturation point where further increases do not improve performance and only add to computational complexity.

We investigate the performance across varying fNIRS lengths l in Fig. 19(c). All tasks exhibit a similar pattern, with accuracy gradually increasing as l increases, peaking at 11. For the MI task, the results for length 11 demonstrated statistical significance compared to lengths 6, 7, and 8 ($p < 0.05$). For the MA task, the accuracy at the fNRIS length of 11 only exhibits a significant improvement compared to those at lengths 6, 7, and 8 ($p < 0.05$). For WG tasks, length 11 demonstrated statistical significance only when compared to lengths 6 and 7 ($p < 0.05$). In the MI task, the maximum accuracy variance across different lengths is 2.43%; in the MA task, it is 2.07%; and in the WG task, it is 1.66%. These results indicate that the fNIRS length can be adjusted for different paradigms and usage scenarios, thus achieving a trade-off between the performance and the length of fNRIS data required by STA-Net.

The number of channels in convolutional kernels plays a crucial role in shaping the feature extraction and representation capabilities of the model. We systematically evaluated the classification performance across various kernel channel configurations within the 3D feature extractor in Fig. 19(d). For the MI task, the (16, 32) combination demonstrated statistical significance compared to all other combinations ($p < 0.05$). In contrast, c showed no statistically significant effect on the classification performance for the MA task ($p > 0.05$). For the WG task, only the (16, 32) and (32, 64) channel combinations demonstrated statistical significance ($p < 0.05$). These findings indicate that the effectiveness of convolutional kernel channel configurations may differ

depending on the task. Consequently, tailoring kernel parameters to the specific task is essential to strike an optimal balance between model complexity and performance.

To investigate the interaction effects among parameters, we conducted two-way ANOVA on all possible pairwise combinations of parameters. The results revealed that across all tasks, only the interaction between h and d was statistically significant ($p < 0.05$).

5. Discussion

In this study, we propose a novel hybrid BCI method called Spatial–Temporal Alignment Network (STA-Net) that effectively leverages the unique features of EEG and fNIRS. Due to the disparate response times of EEG and fNIRS to tasks, a temporal misalignment arises between them, presenting a challenge for their integration. STA-Net leverages the high temporal resolution of EEG and its fast response to tasks, forms an end-to-end structure, and achieves adaptive temporal alignment between EEG and fNIRS signals. The 3D convolution module captures temporal and spatial features of EEG and fNIRS signals by utilizing the high spatial resolution of fNIRS and the FGSA layer to generate a spatial attention map. This map emphasizes task-related channels in EEG, aligning it with fNIRS and generating tokens with learned features. The EGTA layer utilizes a cross-attention Transformer to capture the global temporal correlation between EEG and fNIRS segments, generating a temporal attention map for aligning fNIRS with EEG. The proposed method significantly improves the predictive capability of fNIRS signals, enhancing the performance of the EEG-fNRIS hybrid BCI system. In the classification module, the predictions of spatially-aligned EEG and temporally-aligned fNIRS are combined using a weighted sum to generate the final prediction. In summary, STA-Net is capable of achieving adaptive precise spatial–temporal alignment of EEG and fNIRS based on the characteristics of different subjects and tasks.

Experimental results have confirmed that STA-Net demonstrates remarkable performance on publicly available datasets. First, the average accuracy is improved compared to EEG-standalone algorithms, fNIRS-standalone algorithms, and other hybrid BCI algorithms. Secondly, statistical analysis demonstrates that STA-Net has less early-stage performance degradation and achieves the highest accuracy at most time points. Ablation experiments confirm that integrating EEG and fNIRS, particularly with the EGTA layer, significantly boosts overall performance. Moreover, we employ t-SNE to visualize the EEG and fNIRS features, revealing a significantly enhanced discriminative capability of the fNRIS features in the presence of the EGTA layer. To further enhance the interpretability of STA-Net, we visualize the temporal attention map generated by the EGTA layer and validate it with the dynamic trend of the fNIRS signal. The results indicate that the temporal weight distribution learned by EGTA aligns with the trend of fNIRS. As depicted in Fig. 17, Subject S11 exhibits a reaction delay of approximately 3 s for the fNIRS in the MI task. Furthermore, it is noteworthy that the temporal weight at the corresponding position in Fig. 16 is maximal for Subject S11, indicating that the EGTA layer can end-to-end extract the correlation between each fNIRS segment and the EEG signal, thereby facilitating the generation of fNRIS signals most pertinent to the task.

There are still several limitations. Firstly, due to the necessity of utilizing multiple temporal windows of fNIRS data, STA-Net conducts a delayed evaluation for task execution assessment at the current time point. Secondly, STA-Net contains a relatively large number of parameters, with a significant proportion attributed to the linear transformation operation within the EGTA layer. Third, due to the individual variability of fNIRS delay, STA-Net is a subject-specific method that does not leverage effective information from other subjects. In future research, we aim to minimize the required number of fNIRS segments and develop an asynchronous BCI system. Moreover, we will attempt to reduce the spatial dimensions of the EEG and fNIRS 3D tensors, as well as decrease the output dimension of the EGTA layer, although these may lead to some performance degradation. We will employ transfer learning to enhance the generalizability across different subjects.

6. Conclusion

This study proposes an end-to-end and efficient EEG-fNIRS hybrid BCI method called Spatial–Temporal Alignment Network (STA-Net). STA-Net effectively capitalizes on the high temporal resolution of EEG and the high spatial resolution of fNIRS by employing the cross-attention mechanism, thereby achieving precise and self-adapting spatio-temporal alignment between EEG and fNRIS. Following comparative experimentation, STA-Net demonstrates outstanding performance on three tasks using two public EEG-fNIRS datasets. The visualization confirms that STA-Net effectively captures key information consistent with the characteristics of physiological signals on a global scale. Overall, our model yields promising performance in hybrid EEG-fNRIS decoding.

CRediT authorship contribution statement

Mutian Liu: Writing – review & editing, Writing – original draft, Visualization, Methodology, Investigation, Conceptualization. **Banghua Yang:** Writing – review & editing, Funding acquisition. **Lin Meng:** Writing – review & editing, Visualization, Supervision. **Yonghuai Zhang:** Funding acquisition. **Shouwei Gao:** Writing – review & editing, Funding acquisition. **Peng Zan:** Writing – review & editing. **Xinxing Xia:** Writing – review & editing, Methodology.

Declaration of competing interest

The authors declare that they have no known competing financial interests or personal relationships that could have appeared to influence the work reported in this paper.

Acknowledgments

This study was supported by the National Key Research and Development Program of China (2024YFF1206500, 2024YFF1206502), Aeronautical Science Foundation of China (2024Z0710S6003, ASFC-2024Z0710S6003) and National Natural Science Foundation of China (No. 62376149).

Appendix A. Supplementary data

Supplementary material related to this article can be found online at https://doi.org/10.1016/j.inffus.2025.103023.

Data availability

This work uses public datasets, and the data links have been shared in the manuscript.

References

[1] R.A. Ramadan, A.V. Vasilakos, Brain computer interface: control signals review, Neurocomputing 223 (2017) 26–44.
[2] Y. Song, Q. Zheng, B. Liu, X. Gao, EEG conformer: Convolutional transformer for EEG decoding and visualization, IEEE Trans. Neural Syst. Rehabil. Eng. 31 (2022) 710–719.
[3] Z. Miao, M. Zhao, X. Zhang, D. Ming, LMDA-Net: A lightweight multi-dimensional attention network for general EEG-based brain-computer interfaces and interpretability, NeuroImage 276 (2023) 120209.
[4] Z. Wang, J. Fang, J. Zhang, Rethinking delayed hemodynamic responses for fNIRS classification, IEEE Trans. Neural Syst. Rehabil. Eng. (2023).
[5] Z. Wang, J. Zhang, X. Zhang, P. Chen, B. Wang, Transformer model for functional near-infrared spectroscopy classification, IEEE J. Biomed. Heal. Inform. 26 (6) (2022) 2559–2569.
[6] B. Du, X. Cheng, Y. Duan, H. Ning, fMRI brain decoding and its applications in brain–computer interface: A survey, Brain Sci. 12 (2) (2022) 228.
[7] M. Fleury, P. Figueiredo, A. Vourvopoulos, A. Lécuyer, Two is better? Combining EEG and fMRI for BCI and neurofeedback: A systematic review, J. Neural Eng. (2023).

[8] X. Li, J. Chen, N. Shi, C. Yang, P. Gao, X. Chen, Y. Wang, S. Gao, X. Gao, A hybrid steady-state visual evoked response-based brain-computer interface with MEG and EEG, Expert Syst. Appl. 223 (2023) 119736.

[9] M. Sarma, C. Bond, S. Nara, H. Raza, MEGNet: A MEG-based deep learning model for cognitive and motor imagery classification, in: 2023 IEEE International Conference on Bioinformatics and Biomedicine, BIBM, IEEE, 2023, pp. 2571–2578.

[10] S. Vaid, P. Singh, C. Kaur, EEG signal analysis for BCI interface: A review, in: 2015 Fifth International Conference on Advanced Computing and Communication Technologies, IEEE, 2015, pp. 143–147.

[11] N. Naseer, K.-S. Hong, fNIRS-based brain-computer interfaces: a review, Front. Hum. Neurosci. 9 (2015) 3.

[12] J. Minguillon, M.A. Lopez-Gordo, F. Pelayo, Trends in EEG-BCI for daily-life: Requirements for artifact removal, Biomed. Signal Process. Control. 31 (2017) 407–418.

[13] S. Ahn, S.C. Jun, Multi-modal integration of EEG-fNIRS for brain-computer interfaces–current limitations and future directions, Front. Hum. Neurosci. 11 (2017) 503.

[14] Z. He, Z. Li, F. Yang, L. Wang, J. Li, C. Zhou, J. Pan, Advances in multimodal emotion recognition based on brain–computer interfaces, Brain Sci. 10 (10) (2020) 687.

[15] M.U. Ali, A. Zafar, K.D. Kallu, H. Masood, M.M.N. Mannan, M.M. Ibrahim, S. Kim, M.A. Khan, Correlation-filter-based channel and feature selection framework for hybrid EEG-fNIRS BCI applications, IEEE J. Biomed. Heal. Inform. (2023).

[16] H. Cai, Z. Qu, Z. Li, Y. Zhang, X. Hu, B. Hu, Feature-level fusion approaches based on multimodal EEG data for depression recognition, Inf. Fusion 59 (2020) 127–138.

[17] Y. Gao, B. Jia, M. Houston, Y. Zhang, Hybrid EEG-fNIRS brain computer interface based on common spatial pattern by using EEG-informed general linear model, IEEE Trans. Instrum. Meas. (2023).

[18] J. Lin, J. Lu, Z. Shu, N. Yu, J. Han, An EEG-fNIRS neurovascular coupling analysis method to investigate cognitive-motor interference, Comput. Biol. Med. 160 (2023) 106968.

[19] C. Cooney, R. Folli, D. Coyle, A bimodal deep learning architecture for EEG-fNIRS decoding of overt and imagined speech, IEEE Trans. Biomed. Eng. 69 (6) (2021) 1983–1994.

[20] A. Arif, Y. Wang, R. Yin, X. Zhang, A. Helmy, EF-Net: Mental state recognition by analyzing multimodal EEG-fNIRS via CNN, Sensors 24 (6) (2024) 1889.

[21] Q. He, L. Feng, G. Jiang, P. Xie, Multimodal multitask neural network for motor imagery classification with EEG and fNIRS signals, IEEE Sens. J. 22 (21) (2022) 20695–20706.

[22] L. Qiu, W. Feng, Z. Ying, J. Pan, EFMLNet: Fusion model based on end-to-end mutual information learning for hybrid EEG-fNIRS brain-computer interface applications, in: Proceedings of the Annual Meeting of the Cognitive Science Society, Vol. 46, 2024.

[23] Y. Dai, Z. Yan, J. Cheng, X. Duan, G. Wang, Analysis of multimodal data fusion from an information theory perspective, Inform. Sci. 623 (2023) 164–183.

[24] M.H.R. Rabbani, S.M.R. Islam, Multimodal decision fusion of eeg and fnirs signals, in: 2021 5th International Conference on Electrical Engineering and Information Communication Technology, ICEEICT, IEEE, 2021, pp. 1–6.

[25] Y. Kwak, W.-J. Song, S.-E. Kim, FGANet: fNIRS-guided attention network for hybrid EEG-fNIRS brain-computer interfaces, IEEE Trans. Neural Syst. Rehabil. Eng. 30 (2022) 329–339.

[26] X. Jiang, X. Gu, K. Xu, H. Ren, W. Chen, Independent decision path fusion for bimodal asynchronous brain–computer interface to discriminate multiclass mental states, IEEE Access 7 (2019) 165303–165317.

[27] M.H.R. Rabbani, S.M.R. Islam, Deep learning networks based decision fusion model of EEG and fNIRS for classification of cognitive tasks, Cogn. Neurodyn. 18 (4) (2024) 1489–1506.

[28] Z. Wang, L. Yang, Y. Zhou, L. Chen, B. Gu, S. Liu, M. Xu, F. He, D. Ming, Incorporating EEG and fNIRS patterns to evaluate cortical excitability and MI-BCI performance during motor training, IEEE Trans. Neural Syst. Rehabil. Eng. 31 (2023) 2872–2882.

[29] M.H.R. Rabbani, S.M.R. Islam, Deep learning networks based decision fusion model of EEG and fNIRS for classification of cognitive tasks, Cogn. Neurodyn. (2023) 1–18.

[30] J. Shin, A. von Lühmann, B. Blankertz, D.-W. Kim, J. Jeong, H.-J. Hwang, K.-R. Müller, Open access dataset for EEG+ NIRS single-trial classification, IEEE Trans. Neural Syst. Rehabil. Eng. 25 (10) (2016) 1735–1745.

[31] C. Zhang, H. Yang, C.-C. Fan, S. Chen, C. Fan, Z.-G. Hou, J. Chen, L. Peng, K. Xiang, Y. Wu, et al., Comparing multi-dimensional fNIRS features using bayesian optimization-based neural networks for mild cognitive impairment (MCI) detection, IEEE Trans. Neural Syst. Rehabil. Eng. 31 (2023) 1019–1029.

[32] Z. Chen, C. Gao, T. Li, X. Ji, S. Liu, M. Xiao, Open access dataset integrating EEG and fNIRS during stroop tasks, Sci. Data 10 (1) (2023) 618.

[33] L. Katus, A. Blasi, S. McCann, L. Mason, E. Mbye, E. Touray, M. Ceesay, M. de Haan, S.E. Moore, C.E. Elwell, et al., Longitudinal fNIRS and EEG metrics of habituation and novelty detection are correlated in 1–18-month-old infants, NeuroImage 274 (2023) 120153.

[34] J. Shin, A. Von Lühmann, D.-W. Kim, J. Mehnert, H.-J. Hwang, K.-R. Müller, Simultaneous acquisition of EEG and NIRS during cognitive tasks for an open access dataset, Sci. Data 5 (1) (2018) 1–16.

[35] S.M. Hosni, S.B. Borgheai, J. Mclinden, Y. Shahriari, An fNIRS-based motor imagery BCI for ALS: A subject-specific data-driven approach, IEEE Trans. Neural Syst. Rehabil. Eng. 28 (12) (2020) 3063–3073.

[36] T.-W. Lee, M. Girolami, T.J. Sejnowski, Independent component analysis using an extended infomax algorithm for mixed subgaussian and supergaussian sources, Neural Comput. 11 (2) (1999) 417–441.

[37] W.B. Baker, A.B. Parthasarathy, D.R. Busch, R.C. Mesquita, J.H. Greenberg, A. Yodh, Modified Beer-Lambert law for blood flow, Biomed. Opt. Express 5 (11) (2014) 4053–4075.

[38] I.W. Selesnick, C.S. Burrus, Generalized digital Butterworth filter design, IEEE Trans. Signal Process. 46 (6) (1998) 1688–1694.

[39] Z. Sun, Z. Huang, F. Duan, Y. Liu, A novel multimodal approach for hybrid brain–computer interface, IEEE Access 8 (2020) 89909–89918.

[40] Y. Kwak, K. Kong, W.-J. Song, B.-K. Min, S.-E. Kim, Multilevel feature fusion with 3d convolutional neural network for eeg-based workload estimation, IEEE Access 8 (2020) 16009–16021.

[41] S. McKinley, M. Levine, Cubic spline interpolation, Coll. Redwoods 45 (1) (1998) 1049–1060.

[42] D. Tran, L. Bourdev, R. Fergus, L. Torresani, M. Paluri, Learning spatiotemporal features with 3d convolutional networks, in: Proceedings of the IEEE International Conference on Computer Vision, 2015, pp. 4489–4497.

[43] S. Ji, W. Xu, M. Yang, K. Yu, 3D convolutional neural networks for human action recognition, IEEE Trans. Pattern Anal. Mach. Intell. 35 (1) (2012) 221–231.

[44] X. Zhao, H. Zhang, G. Zhu, F. You, S. Kuang, L. Sun, A multi-branch 3D convolutional neural network for EEG-based motor imagery classification, IEEE Trans. Neural Syst. Rehabil. Eng. 27 (10) (2019) 2164–2177.

[45] S. Ioffe, C. Szegedy, Batch normalization: Accelerating deep network training by reducing internal covariate shift, in: International Conference on Machine Learning, pmlr, 2015, pp. 448–456.

[46] D.-A. Clevert, T. Unterthiner, S. Hochreiter, Fast and accurate deep network learning by exponential linear units (elus), 2015, arXiv preprint arXiv:1511.07289.

[47] N. Srivastava, G. Hinton, A. Krizhevsky, I. Sutskever, R. Salakhutdinov, Dropout: a simple way to prevent neural networks from overfitting, J. Mach. Learn. Res. 15 (1) (2014) 1929–1958.

[48] K. He, X. Zhang, S. Ren, J. Sun, Delving deep into rectifiers: Surpassing human-level performance on imagenet classification, in: Proceedings of the IEEE International Conference on Computer Vision, 2015, pp. 1026–1034.

[49] A. Vaswani, N. Shazeer, N. Parmar, J. Uszkoreit, L. Jones, A.N. Gomez, Ł. Kaiser, I. Polosukhin, Attention is all you need, Adv. Neural Inf. Process. Syst. 30 (2017).

[50] Y. Li, X. Zhang, D. Ming, Early-stage fusion of EEG and fNIRS improves classification of motor imagery, Front. Neurosci. 16 (2023) 1062889.

[51] B. Yu, L. Cao, J. Jia, C. Fan, Y. Dong, C. Zhu, E-FNet: A EEG-fNIRS dual-stream model for Brain–Computer Interfaces, Biomed. Signal Process. Control. 100 (2025) 106943.

[52] R. Mane, E. Chew, K. Chua, K.K. Ang, N. Robinson, A.P. Vinod, S.-W. Lee, C. Guan, FBCNet: A multi-view convolutional neural network for brain-computer interface, 2021, arXiv preprint arXiv:2104.01233.

[53] R.T. Schirrmeister, J.T. Springenberg, L.D.J. Fiederer, M. Glasstetter, K. Eggensperger, M. Tangermann, F. Hutter, W. Burgard, T. Ball, Deep learning with convolutional neural networks for EEG decoding and visualization, Hum. Brain Mapp. 38 (11) (2017) 5391–5420.

[54] D.P. Kingma, J. Ba, Adam: A method for stochastic optimization, 2014, CoRR 1412.6980.

[55] L. Van der Maaten, G. Hinton, Visualizing data using t-SNE, J. Mach. Learn. Res. 9 (11) (2008).

[56] G. Sammer, C. Blecker, H. Gebhardt, M. Bischoff, R. Stark, K. Morgen, D. Vaitl, Relationship between regional hemodynamic activity and simultaneously recorded EEG-theta associated with mental arithmetic-induced workload, Hum. Brain Mapp. 28 (8) (2007) 793–803.

[57] L. Brinkman, A. Stolk, H.C. Dijkerman, F.P. de Lange, I. Toni, Distinct roles for alpha-and beta-band oscillations during mental simulation of goal-directed actions, J. Neurosci. 34 (44) (2014) 14783–14792.