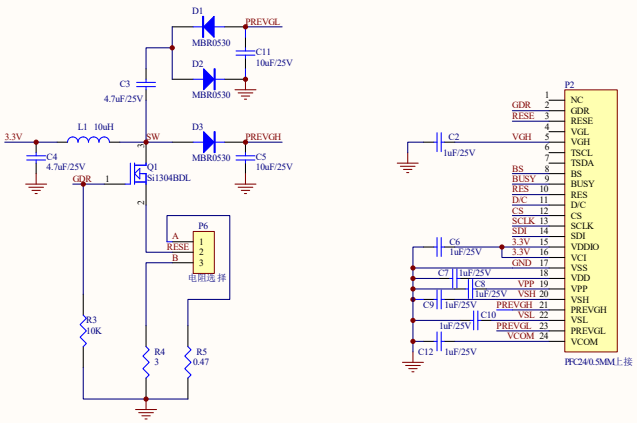
D1
MBR0530
PREVGL
C11
10uF/25V
D2
MBR0530
C3
4.7uF/25V
L1 10uH
3.3V
SW
D3
MBR0530
PREVGH
C4
4.7uF/25V
C5
10uF/25V
GDR
Q1
Si1304BDL
P6
A
RESE
B
电阻选 择
R3
10K
R4
3
R5
0.47
P2
NC
GDR
RESE
VGL
VGH
TSCL
TSDA
BS
BUSY
RES
D/C
CS
SCLK
SDI
VDDIO
VCI
VSS
VDD
VPP
VSH
PREVGH
VSL
PREVGL
VCOM
C2
1uF/25V
C6
1uF/25V
C7
1uF/25V
C8
1uF/25V
C9
1uF/25V
C10
1uF/25V
C12
1uF/25V
PFC24/0.5MM上接

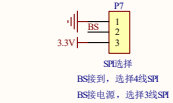
P7
BS
3.3V
SPI选择
BS接到，选择4线SPI
BS接电源，选择3线SPI

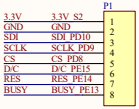
P1
3.3V 3.3V S2
GND GND
SDI SDI PD10
SCLK SCLK PD9
CS CS PD6
D/C D/C PE15
RES RES PE14
BUSY BUSY PE13
PH2.0mm-8PIN

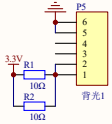
P5
3.3V
R1
10Ω
R2
10Ω
背光1