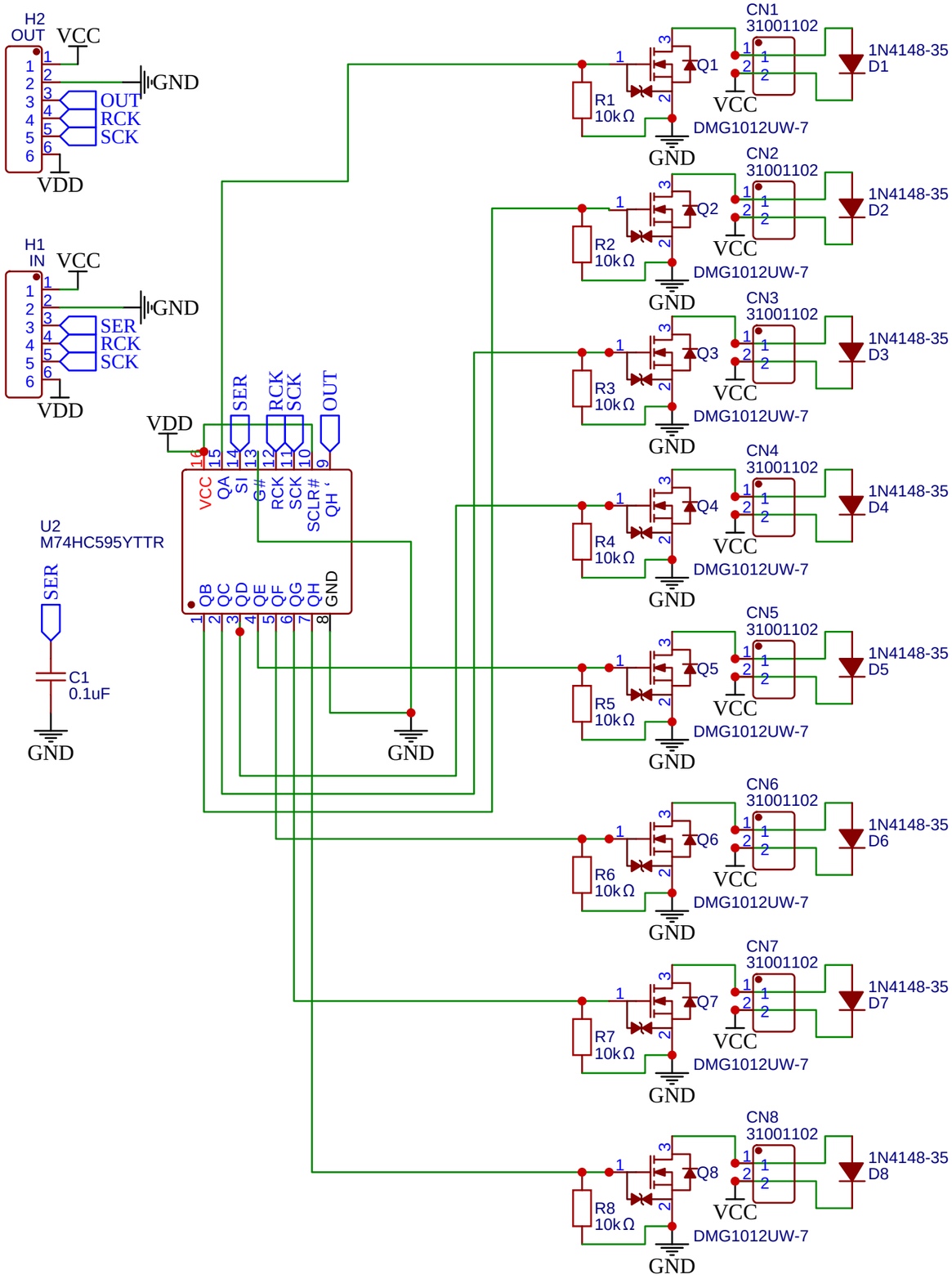

TITLE: 12V Output Module		REV: 1.0
EasyEDA	Company: Harruchan Design	Sheet: 1/1
	Date: 2024-05-03 Drawn By: 23harris23	