Technical Blueprint and Laboratory Manual for an AD5933-Based Milk-Adulteration EIS Prototype

Blueprint v4.0c — frozen lab authority (procedural-patch revision)

Tipu Sultan

Builds on v4.0b. Adds: G-RFB SSOP-probing safety caution, lab-DMM cross-check promoted to a pre-G-SAT step, JSONL examples brought into line with the 5–100 kHz default, and an explicit note that G-SAT and G-LIN are analyses applied to the F.10 resistor-sweep dataset rather than separate sweep sessions.

Project direction	Milk-first, calibration-first, fixed-geometry two-electrode EIS prototype using AD5933 module, ESP32 control, DS18B20 temperature logging, and laptop-side processing.
Current hardware state	Two AD5933 modules DMM-verified unpowered: J1 open ($\approx 3\,\mathrm{M\Omega}$), J2 closed ($\approx 0\,\Omega$), J3 open, J4 open, J5 open, J6 closed. Both are in vendor-defined Direct mode.
Primary hardware decision	Preserve one module in Direct mode as a control after Direct-mode sanity passes. Convert the other module to Dual-op-amp mode *after* both boards have been power-, I^2C-, and single-resistor-tested in their as-received state.
Evidence basis	Official AD5933 data sheet, official AD5933 evaluation-board guide (UG-364), vendor module user manual (partially trusted; pages 1–5 only), project DMM measurements, uploaded board photographs, Taobao purchase audit, EISight progress report, and existing EISight pipeline source.

Frozen rule

This document is deliberately conservative. It is not a marketing plan. It is a bench-executable engineering and publication-risk control document. Any dataset collected before the jumper-state issue, Direct-mode sanity, rework verification, resistor characterization, DC-bias check, cell repeatability, temperature logging, and cleaning/QC gates are closed must be treated as exploratory only.

v4.0b Technical Patch Summary (what changed since v4.0)

This revision keeps the v4.0 architecture and BOM intact and patches only the items where official AD5933 documentation, datasheet specifications, or basic physics required correction. The patches are:

1. **DC-bias gate is now a three-measurement procedure (Section 5.11):** log $V_{DC}(P1\text{–GND})$, $V_{DC}(P2\text{–GND})$, and $V_{DC}(P1\text{–}P2)$. Primary pass/fail is on the differential $|V_{DC}(P1\text{–}P2)| < 50\,\text{mV}$ under active excitation, with both no-load and 470 Ω-loaded conditions. Absolute values retained as diagnostics.
2. **AC-coupling capacitor sizing and placement (Section 5.11, 8.6):** if added, minimum 10 µF non-polar, 47 µF film preferred, in series with VOUT *upstream* of the DPDT common terminal so it is present in both CAL and SAMPLE paths and is absorbed by the per-frequency gain factor. Calibrate through.
3. **R_{FB} inventory gate (new, Section 6.4):** DMM-measure resistance between AD5933 Pin 4 (R_{FB}) and Pin 5 (VIN) on each module with the IC unpowered, before any wet test. Logged in `hardware/rfb_inventory.csv`.
4. **Saturation/clipping characterization gate (G-SAT, Section 6.10):** explicit resistor-sweep check that the AD5933 + on-board R_{FB} does not saturate the internal ADC at expected milk impedances (330 Ω–700 Ω). R_{FB} rework or external buffer (per AD5933 datasheet Fig. 35) is conditional on this gate failing – not pre-emptive.
5. **Amplitude-linearity gate (G-LIN, Section 6.10):** repeat one resistor at Range 2 versus Range 4 and require calibrated $|Z|$ agreement within 2%.
6. **Conservative initial trusted band (Section 8.5):** 5–100 kHz with internal MCLK; below 5 kHz only after explicit resistor QC validation, per UG-364, p. 19, on internal-oscillator spectral leakage. External MCLK at 4 MHz is reclassified as an *optional fallback*, not a mandatory addition.
7. **Range 4 rationale corrected (Section 8.6):** Range 4 minimizes the AC perturbation amplitude (linearity-friendly) but does *not* minimize the DC differential $V(P1-P2)$ in raw Direct mode, because VIN is hard-biased at $V_{DD}/2$ [1]. AC coupling or Dual-op-amp-mode buffering is the only mechanism that drives the differential toward zero independently of range. The previous v4.0 wording is corrected.
8. **Signed int16 register parsing (Sections 9.2, I.4, I.5):** the AD5933 stores real (`0x94`/`0x95`) and imaginary (`0x96`/`0x97`) results in twos-complement 16-bit format [1]. Firmware and pipeline must perform sign-extending parsing. The internal temperature register is 14-bit signed in a 16-bit envelope.
9. **Quiescent current rule relaxed (Section 6.4):** 15–25 mA is treated as a reference expectation, not a hard fail. Hard-fail is reserved for thermal runaway, unstable 3.3 V rail, large module-to-module mismatch (>50%), I^2C bus failure, or visible/smell damage.
10. **Risk register additions (Section 11.2):** new rows for TIA/R_{FB} saturation, low-frequency DFT spectral leakage, and AC-coupling calibration-path leak.

The patches do *not* require a different BOM, a different cell, a different ESP32 firmware architecture, or a different paper scope. They tighten the validity gates between Day-B0 sanity and first-liquid testing.

The single biggest operational change is point 6: the publication-candidate trusted band is now **5–100 kHz** until resistor QC at lower frequencies is recorded.

v4.0c Procedural Patch Summary (changes since v4.0b)

v4.0c is a small procedural revision. The architecture, BOM, gates, and acceptance criteria of v4.0b are preserved. The patches address an external review finding that:

1. **G-SAT and G-LIN are analyses applied to the F.10 resistor-sweep dataset, not separate sweep sessions.** The text in F.10.a / F.10.b is reworded to make this explicit, removing any ambiguity that could lead to redundant data acquisition.
2. **G-RFB SSOP-probing safety caution (Section 6.4):** direct DMM probing of AD5933 Pin 4 / Pin 5 is correct in principle but mechanically risky on a 0.65 mm SSOP package. If safe probing cannot be achieved with a magnifier and fine probes, do not force it; G-SAT will resolve the saturation question empirically.
3. **Lab-DMM cross-check on 1 kΩ promoted to a pre-G-SAT step (Section 6.7):** the gain factor is anchored on `R1k_01`, so any handheld-DMM error in that single measurement propagates through every calibrated $|Z|$ figure. The cross-check is moved from "before publication" (Open Items) to "before resistor characterization."
4. **JSONL example (Section 9.4) brought into line with the new default sweep band:** `start_hz` updated from 1000 Hz to 5000 Hz, `points` from 100 to 96. This eliminates a silent drift between the firmware example and the v4.0b trusted-band rule.

No bench-procedure changes, no new gates, no new components. v4.0c is what you should follow on the bench.

Contents

1 SECTION A — Executive verdict **6**
- 1.1 A.1 Technical soundness . . . 6
- 1.2 A.2 Realistic feasibility with confirmed hardware . . . 6
- 1.3 A.3 Paper-worthiness today . . . 6
- 1.4 A.4 Main blockers to publication-quality work . . . 7
- 1.5 A.5 Immediate highest-risk issue . . . 7

2 SECTION B — Full technical audit and validation **7**
- 2.1 B.1 Audit matrix . . . 7
- 2.2 B.2 Audit summary . . . 9

3 SECTION C — Frozen final system architecture **9**
- 3.1 C.1 Frozen architecture statement . . . 9
- 3.2 C.2 Power tree and discipline . . . 10
- 3.3 C.3 Analog signal path: Direct mode versus Dual-op-amp mode . . . 10
- 3.4 C.4 Digital/control path . . . 10
- 3.5 C.5 Calibration and sample paths . . . 11
- 3.6 C.6 Fallback path if the module underperforms . . . 12

4 SECTION D — Final EIS project BOM/status **12**
- 4.1 D.1 Already available / already bought . . . 12
- 4.2 D.2 Already ordered / in transit . . . 13
- 4.3 D.3 Still to source locally . . . 13
- 4.4 D.4 Optional or backup only . . . 14
- 4.5 D.5 Not needed now . . . 14

5 SECTION E — AD5933 module mode and rework manual **14**
- 5.1 E.1 Confirmed jumper measurements . . . 15
- 5.2 E.2 Acceptance rule for open vs closed . . . 15

5.3 E.3 Mode interpretation . . . 15
5.4 E.4 Why this matters for low-impedance milk EIS . . . 15
5.5 E.5 Exact rework table for Module B . . . 15
5.6 E.6 Module labels . . . 16
5.7 E.7 Exact solder rework procedure . . . 16
5.8 E.8 Post-rework DMM truth table . . . 16
5.9 E.9 Rework risks . . . 16
5.10 E.10 What not to touch during rework . . . 17
5.11 E.11 Post-rework DC-bias verification (three-measurement gate, v4.0b) . . . 18
5.12 E.12 When to stop and ask for help . . . 19

6 SECTION F — Final build manual from zero to first successful data 19
6.1 F.1 Bench preparation . . . 19
6.2 F.2 Module inspection checkpoints . . . 20
6.3 F.3 Jumper verification . . . 20
6.4 F.4 **Direct-mode power, R_{FB} inventory, and I^{2}C sanity on BOTH modules (before rework, v4.0b)** . . . 20
6.5 F.5 Rework Module B . . . 21
6.6 F.6 DC-bias verification . . . 21
6.7 F.7 DMM calibration-resistor metrology . . . 21
6.8 F.8 Perfboard/fixture build . . . 22
6.9 F.9 Parasitic fixture characterization (new) . . . 23
6.10 F.10 Resistor calibration and Direct-vs-Dual characterization (v4.0b: with G-SAT and G-LIN) . . . 23
6.11 F.11 Cell assembly workflow . . . 25
6.12 F.12 First dry tests in the cell . . . 25
6.13 F.13 DI water tests . . . 25
6.14 F.14 Pure milk tests . . . 26
6.15 F.15 Repeatability checks . . . 26
6.16 F.16 Data logging and file organization . . . 26
6.17 F.17 Go/no-go matrix (v4.0c) . . . 27

7 SECTION G — Final cell design and implementation guidance 27
7.1 G.1 Final recommended cell architecture . . . 28
7.2 G.2 Electrode material . . . 28
7.3 G.3 v1 candidate electrode dimensions . . . 28
7.4 G.4 Cable routing . . . 29
7.5 G.5 Mounting strategy . . . 29
7.6 G.6 Cleaning strategy . . . 29
7.7 G.7 Fusion 360 and 3D-printing notes . . . 29
7.8 G.8 Fixed vs adjustable features . . . 29

8 SECTION H — Calibration, QC, and measurement protocol 30
8.1 H.1 DMM metrology of calibration resistors . . . 30
8.2 H.2 Gain and phase calibration (notation corrected) . . . 30
8.3 H.3 Resistor characterization of both modes/modules . . . 31
8.4 H.4 Empirical acceptance thresholds . . . 31
8.5 H.5 Trusted-band selection (v4.0b: 5–100 kHz initial candidate) . . . 31
8.6 H.6 Excitation range and settling cycles (v4.0b: corrected rationale) . . . 32
8.7 H.7 Board and sample temperature logging . . . 32
8.8 H.8 Sweep QC and rejection rules . . . 32
8.9 H.9 Within-session and cross-session repeatability . . . 33
8.10 H.10 Contamination/carryover control . . . 33
8.11 H.11 Electrode cleaning SOP . . . 33
8.12 H.12 Electrode-polarization warning (new) . . . 33

9 SECTION I — Software and data architecture 33
9.1 I.1 Pipeline overview . . . 33
9.2 I.2 ESP32 firmware responsibilities . . . 33
9.3 I.3 What ESP32 must not do in v1 . . . 35
9.4 I.4 Serial packet format (JSONL) . . . 35
9.5 I.5 Raw CSV schema . . . 35
9.6 I.6 Calibration CSV schema . . . 36
9.7 I.7 Feature table schema . . . 36
9.8 I.8 Firmware/software milestone order . . . 36

10 SECTION J — Research audit and publication plan 37
10.1 J.1 Strengths . . . 37
10.2 J.2 Weaknesses . . . 37
10.3 J.3 Likely reviewer attacks . . . 37
10.4 J.4 Mandatory experiments . . . 37
10.5 J.5 Defensible novelty claim . . . 38
10.6 J.6 Minimum / stronger / journal versions . . . 38

11 SECTION K — Risk register and troubleshooting matrix 38
11.1 K.1 Experimental validation ladder . . . 38
11.2 K.2 Risk register . . . 38
11.3 K.3 Symptom-to-cause troubleshooting table . . . 39

12 SECTION L — Required changes from previous blueprint 40

13 SECTION M — Final action plan 43
13.1 M.1 Next 24 hours (v4.0c) . . . 43
13.2 M.2 Next 3 days (v4.0c) . . . 43
13.3 M.3 Next 7 days (v4.0c) . . . 44
13.4 M.4 Next 30 days . . . 44

Open items requiring bench clarification or further research 45

1 SECTION A — Executive verdict

Executive verdict

The current project direction is technically sound **only if the instrument is treated as an unvalidated measurement system until resistor, liquid-cell, DC-bias, and repeatability gates are passed**. The AD5933+ESP32+laptop architecture is feasible with the confirmed hardware, but both AD5933 modules are currently in Direct mode. That means the onboard AD8606 is physically present but is bypassed in the main sample path. For milk-range impedances, this is the highest immediate hardware risk.

The project is currently paper-capable at the **class project / AURA demonstration** level after basic resistor and pure-milk repeatability. It can become an **undergraduate or regional IEEE-style conference paper** if calibration, repeatability, temperature control, and controlled adulteration data are clean. It is not yet strong-indexed-conference or journal-ready until external/reference-instrument comparison, multi-day grouped validation, cell-to-cell reproducibility, blind samples, and uncertainty reporting are added.

1.1 A.1 Technical soundness

- **Sound core:** AD5933 impedance conversion, ESP32 control, fixed cell, DS18B20 temperature logging, and laptop-side calibration/QC is the correct reduced-scope execution path.
- **Main correction:** The DMM continuity results now overrule earlier assumptions. Both modules are currently in Direct mode, not Dual-op-amp mode.
- **Immediate action:** First, verify both modules power up, respond on I^2C, and produce sane data on a single 1 kΩ resistor in their as-received Direct mode. *Only then* rework Module B to Dual-op-amp mode. Module A remains Direct as the comparison reference.

1.2 A.2 Realistic feasibility with confirmed hardware

- **Feasible:** Yes, for a laptop-in-the-loop prototype that measures calibrated resistor loads, a fixed SS316L two-electrode cell, DI-water blank behavior, and milk spectra.
- **Not yet proven:** Reliable milk-adulteration classification. The simulator and ML pipeline do not prove the instrument works.
- **Most likely first success:** Resistor sweep repeatability, followed by pure-milk repeatability over a narrow trusted frequency band.
- **Most likely first failure:** Low-impedance milk loads causing poor accuracy, phase instability, or saturation if the AFE is not actually active after rework; or electrolysis at the SS316L electrodes if a DC bias leaks through the cell (see Section 5 DC-bias gate).

1.3 A.3 Paper-worthiness today

Venue level	Current verdict	What must be added
Class project / AURA demonstration	Achievable after first stable resistor and pure milk plots.	Resistor calibration, repeatable pure milk spectra, clear system diagram, honest limitations.
Undergraduate conference / local conference	Achievable if data collection is disciplined.	Multi-day pure/adulterated dataset, QC rejection rules, grouped validation, temperature metadata, cell cleaning SOP.
Strong indexed conference	Possible but not guaranteed.	Reference instrument or high-quality LCR cross-check, cell-to-cell reproducibility, blind samples, ablations, confidence intervals.

Journal	Not supported at today's state.	Larger sample size, independent ground truth, reference-lab comparison, uncertainty budget, robust external validation, stronger novelty than "low-cost EIS works".

1.4 A.4 Main blockers to publication-quality work

Critical risk

1. Both AD5933 modules are confirmed in Direct mode; the AD8606 path is not yet validated in the active sample path.
2. Direct-mode DC-bias at the electrodes is not yet measured and is a latent electrolysis risk for SS316L in milk.
3. No resistor-based trusted-band map exists yet.
4. No verified fixed SS316L cell geometry exists yet.
5. No cross-session pure-milk repeatability has been demonstrated.
6. No reference instrument comparison exists.
7. No grouped-by-day validation dataset exists.
8. No blind-sample protocol exists.
9. DMM accuracy class is not yet recorded; 0.1% resistors cannot be claimed beyond the DMM's own accuracy.

1.5 A.5 Immediate highest-risk issue

Reviewer-risk warning

A reviewer will not accept "AD5933 module with AD8606" as evidence that the AFE improved low-impedance measurement. The only acceptable answer is a resistor characterization plot comparing Direct mode and Dual-op-amp mode on the same resistor set, showing the trusted frequency band and residual errors, measured with the same DMM-metrology calibration values on both modules.

2 SECTION B — Full technical audit and validation

2.1 B.1 Audit matrix

Item	Verdict	Audit decision
Overall architecture	**VALID WITH CHANGES**	AD5933 + ESP32 + fixed cell + DS18B20 + laptop processing is the right reduced-scope architecture. Treat it as a calibrated instrument, not a generic ML sensor.
Signal chain	**VALID WITH CHANGES**	Correct only after Module B is converted and validated. Current Direct mode leaves the low-impedance milk path under-defended.
AD5933 module choice	**VALID WITH CHANGES**	The module is usable, but the AD5933 native range is not ideal for low-impedance milk. The data sheet gives the standard range as 1 kΩ–10 MΩ and says 100 Ω–1 kΩ requires additional circuitry [1]. The onboard AD8606 path must be activated and characterized.

Item	Verdict	Audit decision
Confirmed Direct-mode jumper state	**VALID**	DMM measurement is now the source of truth: J1 open, J2 closed, J3 open, J4 open, J5 open, J6 closed on both modules. This matches the vendor manual's Direct-mode rule [3].
Onboard AD8606 significance	**VALID WITH CHANGES**	AD8606 is physically present but is *expected to be bypassed* in the main sample path per the vendor's Direct-mode jumper convention. The bypass is verified empirically by Direct-vs-Dual resistor characterization (G-SAT, G-LIN, full F.10 map). Its exact topology after rework remains an **OPEN RISK** until that characterization is complete.
Need to convert one board to Dual-op-amp mode	**VALID**	Required before primary milk testing. One Direct module and one Dual-op-amp candidate, not both Direct and not both reworked.
Bench-order rule	**VALID**	Power + I^2C sanity on *both* modules in Direct mode *before* any rework, using a single 1 kΩ sweep as a functional check. This prevents rework from masking vendor-side defects.
ESP32 role	**VALID**	I^2C to AD5933, 1-Wire to DS18B20, USB serial to laptop. No final calibration, ML, dashboarding, or cloud logic in v1.
DS18B20 role	**VALID WITH CHANGES**	Read sample temperature before and after sweep only; no 1-Wire activity during AD5933 conversion. Log probe ROM ID and pre/post temperature. AD5933 internal temperature register is logged as board/die temperature only.
Manual CAL/SAMPLE switching	**VALID**	Preferred over analog muxes for v1. Switch only while AD5933 is idle. Switch state is metadata.
Cell material and geometry	**VALID WITH CHANGES**	Fixed-geometry direct-contact cell is correct. Geometry remains v1 candidate until DI-water blank, pure milk repeatability, and calibration gates pass.
SS316L vs SS304	**NEEDS CORRECTION**	SS304 is mockup-only. SS316L is the final electrode material. SS316L is in transit from China (ETA ≈ 1–2 weeks). Authenticity remains an open item.
Power architecture	**VALID WITH CHANGES**	Use simple USB/laptop-in-loop power first. Do not redesign power until resistor data show a noise problem. Common ground is mandatory. See Section 3 for the power discipline rules.
Calibration resistor strategy	**VALID WITH CHANGES**	0.1% resistor set (100 Ω, 330 Ω, 470 Ω, 1 kΩ, 4.7 kΩ, 10 kΩ) is well chosen, but DMM accuracy limits the claim: record DMM model and accuracy class; if DMM is worse than 0.1% the reported metrology is DMM-limited.
Shielding/interconnect strategy	**NEEDS CORRECTION**	Module SMA connectors are DDS-OUT and EXT-CLK, not the sample path. Sample path is Vin/Vout pads/terminals. Use short twisted pair (first approach) or shielded coax with deliberate single-end shield grounding.
DC bias at electrodes (v4.0b)	**OPEN RISK**	The receive stage VIN is hard-biased at $V_{DD}/2 \approx 1.65$ V [1]; the transmit stage VOUT carries a per-range DC bias (Range 1: 1.48 V, Range 4: 0.173 V). The differential across a load connected directly between VOUT and VIN is therefore non-zero in every range, with Range 4 giving the *largest* differential (≈ 1.48 V) and Range 1 the smallest (≈ 0.17 V). Either AC coupling or Dual-op-amp-mode buffering is required to drive the differential below 50 mV. Settled empirically by G-DC3 (Section 5.11).
Excitation range selection (v4.0b)	**VALID WITH CHANGES**	Default for milk: Range 4 (198 mV pp). Rationale is *linearity*, not electrolysis: small AC perturbation keeps the system in its small-signal linear regime. Electrolysis is gated separately via G-DC3. Range escalation requires G-DC3 + G-LIN agreement at the new range.

Item	Verdict	Audit decision
TIA / R_{FB} saturation (v4.0b NEW)	**OPEN RISK**	On-board R_{FB} value on the Chinese clone is unpublished. EVAL-AD5933EBZ default is 200 kΩ; Ibba uses selectable 200 Ω–200 kΩ. For 330 Ω milk at Range 4 with 20 kΩ R_{FB}, $V_{\mathrm{ADC}} \approx 12$ V and the receive stage saturates. Settled by G-RFB (DMM measurement) plus G-SAT (resistor-sweep clipping signature).
Low-frequency DFT leakage (v4.0b NEW)	**OPEN RISK**	Internal MCLK + $f_{\mathrm{exc}} < 5$ kHz does not capture an integer number of periods in the 1024-sample window [2]. Per-frequency calibration partially absorbs this. Initial trusted band restricted to 5–100 kHz; sub-5 kHz on resistor QC validation only.
Signed-int16 register parsing (v4.0b NEW)	**NEEDS CORRECTION**	AD5933 real/imag/temperature registers are twos-complement [1]. Mandatory firmware and pipeline parsing rule (Section 9.2.a).
Parasitic fixture characterization (new)	**VALID WITH CHANGES**	Open, short, and cable-motion checks are mandatory before resistor characterization. Without these, residual fixture parasitics are indistinguishable from real cell impedance.
Software pipeline	**VALID WITH CHANGES**	Add session calibration, trusted-band selection, QC, metadata, temperature handling, and grouped validation before real claims.
Dataset collection logic	**NEEDS CORRECTION**	No adulteration data until pure milk repeatability is proven. Data grouped by day, milk source/brand, cell, operator, and calibration session.
Repeatability plan	**VALID WITH CHANGES**	Within-session, cross-session, cell-to-cell, and cleaning/carryover blanks. Pure milk repeatability is the real v1 milestone.
Statistical validation plan	**OPEN RISK**	Day-grouped cross-validation, blind holdout, confidence intervals, ablations. Avoid random row splits.
Publication feasibility	**VALID WITH CHANGES**	Feasible as a disciplined prototype study. Novelty must be conservative.

2.2 B.2 Audit summary

Frozen rule

The master architecture is frozen, but the measurement system is not yet validated. The next defensible scientific step is not milk adulteration. It is: (1) Direct-mode power/I^{2}C/1 kΩ sanity on both boards, (2) rework of Module B, (3) post-rework sanity on Module B, (4) DC-bias verification at the electrode pads on both modules, (5) full resistor characterization Direct vs Dual-op-amp, (6) pure-liquid repeatability.

3 SECTION C — Frozen final system architecture

3.1 C.1 Frozen architecture statement

- **Module A:** `AD5933-A-DIRECT`. Keep in Direct mode. Use for control/comparison and fallback.
- **Module B:** `AD5933-B-DUAL-AFE`. Convert to Dual-op-amp mode *only after* Direct-mode sanity passes on both modules.
- **Controller:** ESP32-DevKitC-32E. Controls AD5933 and temperature probes; streams raw data to laptop.
- **Processing:** Laptop Python/Streamlit. Performs calibration, QC, feature extraction, model training, inference.
- **Cell:** Fixed-geometry SS316L two-electrode cell. SS304 excluded from final data.

- **Switching:** Manual CAL/SAMPLE; no analog mux in v1.

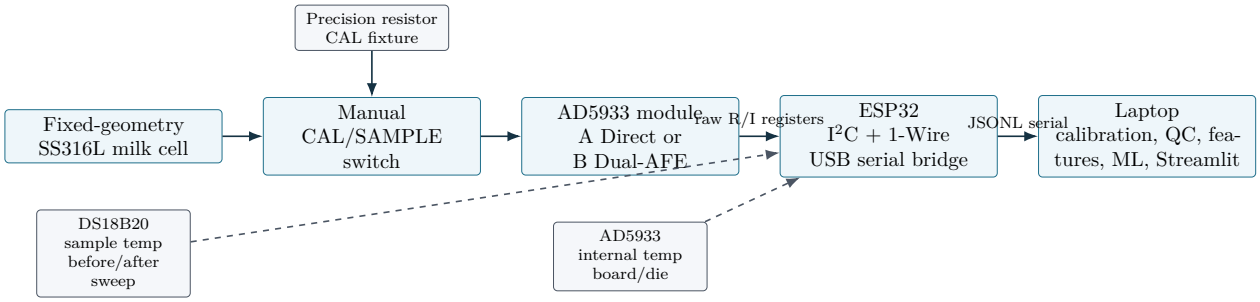

Figure 1: Full system architecture. The laptop, not the ESP32, is the calibration and inference authority.

3.2 C.2 Power tree and discipline

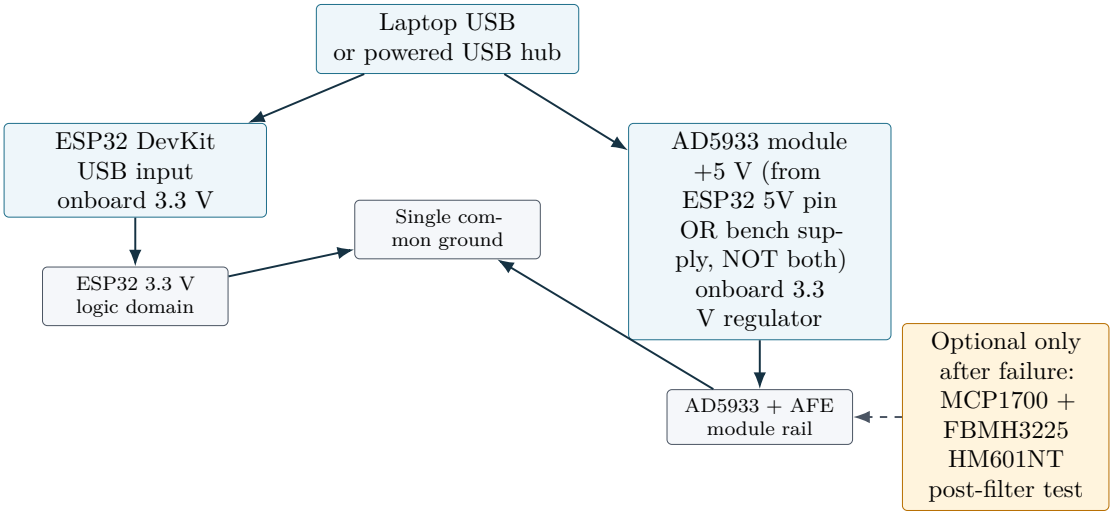

Figure 2: Power tree. Do not redesign the power system until resistor data show a noise or stability problem.

Frozen rule

Power discipline rules (frozen):

- Use exactly one 5 V source for the AD5933 module at a time. Either the ESP32 `5V/Vin` pin or an external bench supply, never both.
- ESP32 GND and module GND must be bonded *before* I^2C SDA/SCL is connected.
- I^2C SDA/SCL pull-ups go to 3.3 V only, never to 5 V. The module's onboard pull-ups (R4, R5 $\approx 2.2\,k\Omega$) already bias to its own 3.3 V rail; do not add a second pull-up to the ESP32 3.3 V rail unless I^2C is proven unstable.
- Before connecting ESP32 I^2C to the module, measure the module's SDA/SCL idle voltage with a DMM relative to module GND. Expected ≈ 3.3 V. If you measure 5 V or a floating value, stop and diagnose.
- Do not back-power the module's 3.3 V header pin from the ESP32 3.3 V rail.

3.3 C.3 Analog signal path: Direct mode versus Dual-op-amp mode

3.4 C.4 Digital/control path

- ESP32 I^2C master at 3.3 V logic level.

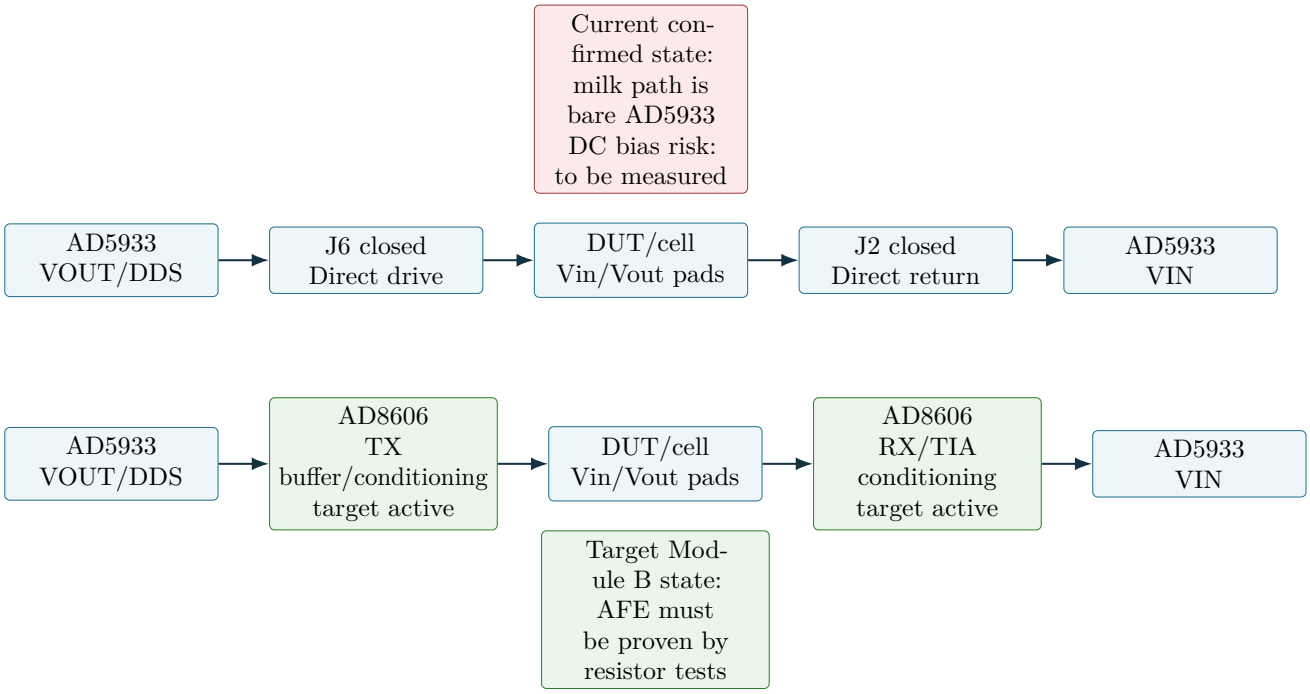

Figure 3: Analog signal path comparison. The exact vendor AFE transfer function remains open until characterized empirically.

- The AD5933 7-bit address is `0x0D`. Arduino `Wire` library uses 7-bit addressing and expects `0x0D`. Some vendor code (including the vendor manual page 3) uses the 8-bit shifted form `0x1A`: do not copy that constant blindly; it is the same device expressed differently.
- I^2C clock: start at 100 kHz; move to 400 kHz only if 100 kHz is proven stable and data rate is insufficient.
- ESP32 reads AD5933 status (`0x8F`), real (`0x94/0x95`), imaginary (`0x96/0x97`), and internal temperature (`0x92/0x93`) registers.
- ESP32 reads DS18B20 sample temperature before and after the sweep only.
- ESP32 sends raw data plus metadata; the laptop computes calibrated impedance.
- MCLK source: internal (16.776 MHz) is sufficient for sweeps above ≈ 1 kHz. External MCLK is only needed for sub-1 kHz work (not required in v1).

3.5 C.5 Calibration and sample paths

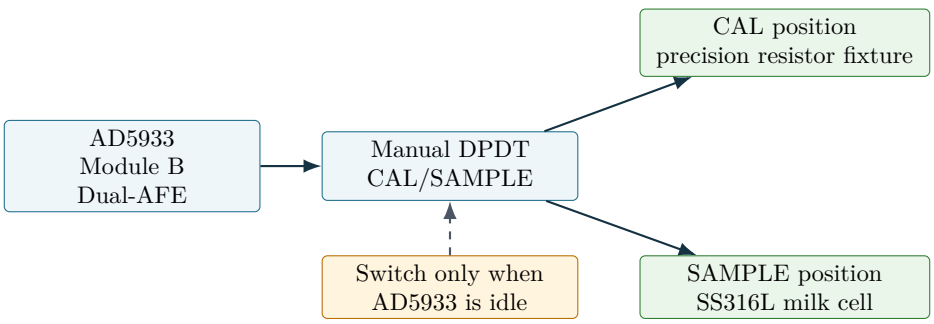

Figure 4: Manual CAL/SAMPLE switching concept. Switch state is metadata, not a lab note afterthought.

3.6 C.6 Fallback path if the module underperforms

Go/no-go gate

If Module B in Dual-op-amp mode cannot measure 330 Ω, 470 Ω, and 1 kΩ within the empirical acceptance thresholds over a contiguous trusted band, do not collect publishable milk data. Fallback sequence: (1) reduce frequency band; (2) reduce excitation range; (3) verify cables and cell; (4) repeat resistor tests; (5) compare against Module A Direct mode; (6) consider external AFE or reference-instrument access.

4 SECTION D — Final EIS project BOM/status

4.1 D.1 Already available / already bought

Name	Qty	Source	Exact version/spec	Project role
AD5933 impedance-analysis module	2	China / Taobao	Shielded AD5933 module with onboard AD8606, +5 V input, onboard 3.3 V regulation, I^2C header, Vin/Vout terminals, DDS-OUT SMA, EXT-CLK SMA, J1–J6 jumper-selectable routing (both confirmed J2+J6 closed = Direct mode)	Core EIS front-end. Module A remains Direct; Module B becomes Dual-AFE candidate.
ESP32-DevKitC-32E	1	China / Taobao	ESP32-32E DevKit with CH340 USB-UART, 3.3 V logic	Controller, I^2C master, 1-Wire temperature reader, USB serial bridge.
DS18B20 waterproof temperature probes	2	China / Taobao	One imported/Dallas-core, one domestic-core; stainless waterproof probe	Sample temperature before/after sweep; second probe for backup/ambient comparison.
Precision resistor set	10 pcs each value	China / Taobao	0.1%, 0.25 W metal-film; 100 Ω, 330 Ω, 470 Ω, 1 kΩ, 4.7 kΩ, 10 kΩ	Gain/phase calibration, Direct-vs-Dual characterization, trusted-band mapping.
47 nF C0G/NP0 capacitors	3	China / Taobao	1210, 50 V, C0G/NP0	Optional analog filtering only.
MCP1700-3302E regulators	3	China / Taobao	TO-92 3.3 V LDO	Optional clean 3.3 V rail contingency.
Ferrite beads	10	China / Taobao	FBMH3225HM601NT; 1210/3225, ≈ 600 Ω impedance at 100 MHz (ferrite-bead spec convention)	Optional supply filtering. Replaces refunded Murata BLM31PG601SN1L.
SMA solder-head pigtail cables	2	China / Taobao	Short SMA male single-head solder, ≈0.1 m	Usable only as repurposed cable stock; existing module SMAs are DDS-OUT and EXT-CLK, not sample path.
FR4 perfboard	4	China / Taobao	5 cm × 7 cm universal perfboard	Semi-permanent wiring carrier after breadboard validation.

Name	Qty	Source	Exact version/spec	Project role
DPDT toggle switch	1	China / Taobao	ETEN 1321 style 6-pin, ON-ON	Manual CAL/SAMPLE switching.
Soldering tools and consumables	available	Previous BD purchases / project bench	Iron, solder, flux, wick, tweezers, wires, breadboards, jumpers, DMM	Build, rework, jumper verification, wiring, debug.
DMM	1	Available (model/accuracy to be logged before GATE B1)	Used for jumper verification	Continuity, resistor measurement, rail checks, rework validation. Accuracy class must be recorded; it bounds the metrology claim.
SS304 stainless sheet	1	China / Taobao	0.5 mm, 304	Mechanical mockup only. Excluded from final milk data.

4.2 D.2 Already ordered / in transit

Name	Qty	Source	Exact version/spec	Project role
SS316L stainless electrode stock	to confirm	China order, ETA ≈ 1–2 weeks	SS316L sheet/strip/foil; size to be logged on arrival	Final electrode material. Must be photographed, measured, cleaned, and logged before first use. Verify authenticity via invoice/certificate.

4.3 D.3 Still to source locally

Name	Qty	Source	Spec	Project role
3D printed cell bodies	3 identical	IUB FabLab	PETG preferred over PLA (better fat tolerance); single CAD revision	Cell-to-cell reproducibility; fixed electrode positioning.
Cell fasteners and seals	set	Local	Stainless screws/nuts, nonconductive spacers, gasket or O-ring	Mechanical repeatability.
DI or distilled water	sufficient	Lab/local	For cleaning blanks and rinsing	Blank checks, carryover control.

UHT milk baseline samples	multiple batches	Local retail	One brand/fat-class per experiment block; record lot and date	Controlled baseline.
Adulterants	as approved	Lab/local	Water dilution first; other adulterants only with supervisor-approved protocol	Controlled concentration series.
Pipettes / syringes / graduated cylinders	sufficient	Lab/local	Repeatable volumes; dedicated labeled tools	Sample preparation accuracy.
Beakers / sample cups	sufficient	Lab/local	Clean, labeled, repeatable volume	Sample handling.
Lint-free wipes / gloves / IPA / mild detergent	sufficient	Lab/local	Clean handling; dairy-protein film removal	Electrode cleaning SOP.
Material-authenticity documentation	1 record	Seller/lab	Seller certificate or invoice wording for SS316L	Publication-strengthening evidence.

4.4 D.4 Optional or backup only

Item	Status	Use condition
FNIRSI portable oscilloscope / LCR combo	Not confirmed bought; optional	Would be useful for clock/excitation sanity checks. Do not assume availability.
Reference LCR meter / impedance analyzer	Open publication-strengthening item	Strongly improves defensibility. Borrow from IUB lab if possible after Module B works.
External MCLK oscillator	Optional future	Needed only if sub-1 kΩ frequency (< 1 kHz) work is added.
Second ESP32	Optional backup	Useful if primary unit fails.
Custom PCB	Future only	Not before repeatable data and frozen analog path.
Battery / OLED / enclosure polish	Future only	Presentation polish after measurement system works.

4.5 D.5 Not needed now

Frozen rule

Do not spend current build effort on: battery operation, OLED, custom PCB, analog multiplexer, automatic sample switching, mobile app inference, cloud dashboard, through-container capacitive sensing, multi-commodity oil/honey/spice extensions, or SS304 publishable electrodes.

5 SECTION E — AD5933 module mode and rework manual

5.1 E.1 Confirmed jumper measurements

Module	J1	J2	J3	J4	J5	J6	Mode
Module A	$\approx 3\,\mathrm{M\Omega}$ open	$\approx 0\,\Omega$ closed	$\approx 3\,\mathrm{M\Omega}$ open	$\approx 3\,\mathrm{M\Omega}$ open	$\approx 3\,\mathrm{M\Omega}$ open	$\approx 0\,\Omega$ closed	Direct
Module B	$\approx 3\,\mathrm{M\Omega}$ open	$\approx 0\,\Omega$ closed	$\approx 3\,\mathrm{M\Omega}$ open	$\approx 3\,\mathrm{M\Omega}$ open	$\approx 3\,\mathrm{M\Omega}$ open	$\approx 0\,\Omega$ closed	Direct

5.2 E.2 Acceptance rule for open vs closed

Frozen rule

Jumper-state classification (updated from earlier draft):

- **Closed:** DMM reads $< 1\,\Omega$ or gives a continuity beep.
- **Open:** no continuity beep *and* DMM reads megaohm-scale; a reading of several megaohms on a 20 MΩ range is acceptable as "open" (it reflects DMM input impedance, not a partial bridge). Do *not* require $> 10\,\mathrm{M\Omega}$.
- **Ambiguous:** sub-megaohm non-zero reading or inconsistent reading when probes are repositioned → treat as a **fault**, stop and diagnose.

5.3 E.3 Mode interpretation

Vendor manual [3]:

- **Direct mode:** J2 and J6 closed; J1, J3, J4, J5 open.
- **Dual-op-amp mode:** J1, J3, J4, J5 closed; J2 and J6 open.

Both purchased modules are confirmed Direct mode. Any earlier claim that the boards probably shipped in Dual-op-amp mode is rejected.

5.4 E.4 Why this matters for low-impedance milk EIS

AD5933 data sheet [1]: standard impedance range $1\,\mathrm{k\Omega}$–$10\,\mathrm{M\Omega}$; $100\,\Omega$–$1\,\mathrm{k\Omega}$ requires additional circuitry. Milk in a small two-electrode cell typically sits in the hundreds-of-ohms region. Direct mode is the least defensible for that region. Dual-op-amp mode is intended to optimize the signal link via the onboard AD8606, but the gain values and AC coupling must be proven by the resistor set (the vendor does not publish the schematic).

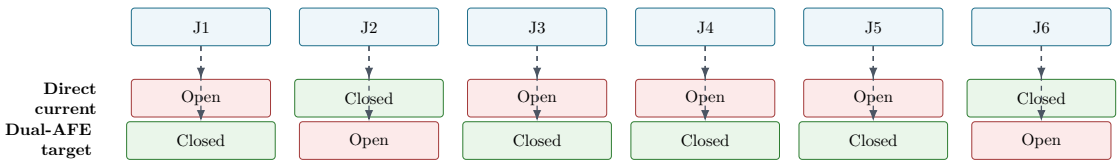

Figure 5: Jumper mode diagram. Module B must move from the top row to the bottom row.

5.5 E.5 Exact rework table for Module B

Jumper	Current state	Target state	Action
J1	Open	Closed	Add solder bridge.
J2	Closed	Open	Remove bridge with wick/flux.
J3	Open	Closed	Add solder bridge.
J4	Open	Closed	Add solder bridge.
J5	Open	Closed	Add solder bridge.
J6	Closed	Open	Remove bridge with wick/flux.

5.6 E.6 Module labels

- **Before rework**, label both boards on the back side, away from analog traces:
  - `AD5933-A-DIRECT`
  - `AD5933-B-DIRECT-PRE-REWORK`
- **After successful rework and DMM verification**, relabel Module B as `AD5933-B-DUAL-AFE`.

5.7 E.7 Exact solder rework procedure

1. Clear the bench. Use clean paper or an ESD-safe surface. Photograph Module B before rework (all six jumpers plus full board shots).
2. Disconnect all power, USB, ESP32 wires, probes, and sample wiring. The board must be fully unpowered.
3. Verify the pre-rework state one last time with DMM continuity/Ohms mode.
4. Warm the iron to 320–340 °C (lower end for leaded solder, higher for lead-free). Use a fine chisel or conical tip. Apply flux to J2 and J6.
5. Use solder wick to remove the existing bridges on J2 and J6. Do not scrape the PCB.
6. DMM-check J2 and J6: target state *open* per the acceptance rule in Section 5.2 (no beep, megaohm-scale reading).
7. Apply flux to J1, J3, J4, J5. Add small, clean solder bridges with minimum solder.
8. DMM-check J1, J3, J4, J5: target state *closed* ($< 1\,\Omega$ or beep).
9. Clean flux residue with isopropyl alcohol on a cotton swab. Allow to dry fully.
10. Inspect under magnifier or phone macro. Photograph all six jumpers post-rework.
11. Record results in `hardware/jumper_state.csv` with a new row tagged `post_rework`.

5.8 E.8 Post-rework DMM truth table

Jumper	Target reading	Decision
J1	$< 1\,\Omega$ or continuity beep	Closed; pass.
J2	no beep; megaohm-scale reading	Open; pass.
J3	$< 1\,\Omega$ or beep	Closed; pass.
J4	$< 1\,\Omega$ or beep	Closed; pass.
J5	$< 1\,\Omega$ or beep	Closed; pass.
J6	no beep; megaohm-scale reading	Open; pass.

5.9 E.9 Rework risks

Critical risk

- Overheating a jumper pad can lift the pad from the substrate.
- Excess solder can bridge adjacent passives (R1–R8, C1, C5, C10, C11).
- Flux residue creates leakage in high-impedance nodes.
- A half-open or cracked joint can pass visually but fail electrically.
- Reworking both boards destroys the Direct-vs-Dual comparison figure. Do not rework Module A.

5.10 E.10 What not to touch during rework

- Do not touch AD5933 pins.
- Do not touch AD8606 pins.
- Do not remove shield-can anchor solder unless absolutely necessary.
- Do not alter R1–R8, C1, C5, C10, C11, C4/C6/C8/C9, or the SMA connectors.
- Do not connect milk cell or ESP32 during rework.

5.11 E.11 Post-rework DC-bias verification (three-measurement gate, v4.0b)

Go/no-go gate

DC-BIAS GATE G-DC3 (MODULE A AND MODULE B, BEFORE ANY WET MEASUREMENT)

Why three measurements, not one. The AD5933 receive stage is hard-biased at $V_{DD}/2$ [1], i.e. $\approx 1.65\,\mathrm{V}$ at $V_{DD} = 3.3\,\mathrm{V}$. The transmit stage (VOUT) carries a programmable DC bias that depends on the selected excitation range (Range 1: 1.48 V, Range 2: 0.76 V, Range 3: 0.31 V, Range 4: 0.173 V). When the unknown impedance is connected directly between VOUT and VIN with no AC-coupling, the differential DC across the load is the difference between these two biases, which is non-zero in every range. Faradaic electrolysis on SS316L electrodes in milk is driven by this *differential* potential; absolute pad voltages relative to GND are diagnostic for understanding why the differential has the value it has. Therefore the gate logs all three values and pass/fail is decided on the differential.

Procedure. The DMM is used in DC-volts mode; AC excitation will average out within the DMM's bandwidth. The AD5933 must be in active output state during the measurement, not standby (in standby, the datasheet [1] ties VOUT and VIN internally to ground and the test is meaningless).

1. Power the module at 5 V. Do not connect any load across P1/P2.
2. Program a single-point sweep at 10 kHz, Range 4, PGA ×1, settling 15. Issue `Initialize with start frequency` then `Start frequency sweep`; keep the AD5933 actively excited at 10 kHz (do not exit to standby) for the duration of the DMM reading.
3. **No-load condition.** Measure and log: $V_{DC}(P1-\mathrm{GND})$, $V_{DC}(P2-\mathrm{GND})$, $V_{DC}(P1-P2)$. Settle the DMM for $\geq 5\,\mathrm{s}$ per reading.
4. **Resistive-load condition.** Place a 470 Ω 0.1% precision resistor across P1/P2. Repeat the three measurements. The resistor-loaded measurement is the more important of the two, because the bias state can shift under load (the VOUT source impedance is 600 Ω at Range 4 and forms a divider with the load).
5. **Primary pass criterion:** $|V_{DC}(P1-P2)| < 50\,\mathrm{mV}$ in *both* the no-load and 470 Ω-loaded conditions.
6. **Warning band:** $50\,\mathrm{mV} \leq |V_{DC}(P1-P2)| < 100\,\mathrm{mV}$. Do not collect publishable wet data; investigate. Try a different excitation range and re-run. Common-mode pad voltages (P1 / GND and P2 / GND) above $\sim 100\,\mathrm{mV}$ each, with low differential, indicate a high common-mode condition that is acceptable for electrolysis but degrades CMRR – record but proceed.
7. **Fail criterion:** $|V_{DC}(P1-P2)| > 100\,\mathrm{mV}$ in either condition. Do not connect milk. Apply the AC-coupling fallback in the next subsection or use Module B in Dual-op-amp mode (where the AD8606 establishes a virtual-ground reference for both transmit and receive sides, driving the differential toward zero independently of range selection).
8. Repeat the full procedure at Range 2 and Range 1 for completeness only *after* the Range 4 result is acceptable. Log results to `hardware/dc_bias_check.csv`.

Log columns: `module_id`, `range`, `condition` (`NOLOAD` or `R470`), `V_DC_P1_GND_mV`, `V_DC_P2_GND_mV`, `V_DC_DIFF_mV`, `V_DD_V`, `date`, `operator`.

E.11.a AC-coupling fallback (only if G-DC3 fails)

Frozen rule

If, and only if, G-DC3 fails on a given module:

1. Insert an AC-coupling capacitor in series with VOUT *upstream of the DPDT common terminal*, so the same capacitor is in the loop during both calibration (CAL position) and sample measurement (SAMPLE position). This guarantees the per-frequency gain factor mathematically absorbs the capacitor's reactance.
2. **Sizing rule.** The capacitor reactance at the lowest sweep frequency must be small relative to the lowest expected sample impedance. For milk in the 330 Ω–700 Ω range and a 5 kHz lower trusted band: $X_C = 1/(2\pi f C)$. At $f = 5\,\text{kHz}$: $X_C(1\,\mu\text{F}) \approx 32\,\Omega$, $X_C(10\,\mu\text{F}) \approx 3.2\,\Omega$, $X_C(47\,\mu\text{F}) \approx 0.7\,\Omega$. **Minimum 10 µF non-polar; 47 µF non-polar/film preferred.** A 1 µF cap is rejected – at 1 kHz it injects 159 Ω, larger than the SOI impedance.
3. **Polarity.** Use a non-polar (e.g. film, ceramic X7R/C0G with adequate voltage rating, or back-to-back electrolytic). Polarized electrolytics applied to the AD5933 VOUT pin will see polarity reversal with every excitation cycle.
4. **Recalibrate-through requirement.** Once the cap is installed, all gain-factor and phase-offset calibration runs must be re-done with the cap in place. Old calibration files must be invalidated.
5. **Trusted-band consequence.** Inserting any AC-coupling cap shifts the reliable lower-frequency limit upward. Verify the resistor characterization at the chosen lower band edge before assuming the cap is benign.

5.12 E.12 When to stop and ask for help

Stop immediately if any of the following occurs: pad lifts; bridge spreads to adjacent component; DMM readings are inconsistent across probe repositioning; a jumper reads neither clearly open nor clearly closed; burned smell; component shifted; you feel the urge to "fix" an IC pin with a large tip.

6 SECTION F — Final build manual from zero to first successful data

6.1 F.1 Bench preparation

1. Clean bench; remove liquids from the electronics area.
2. Prepare labeled containers: `Module A Direct`, `Module B Direct (pre-rework)`, `calibration resistors`, `temperature probes`.
3. Create project folders:

```
EISight/
  hardware/
    photos/
    jumper_state.csv
    resistor_inventory.csv
    dmm_inventory.csv
    dc_bias_check.csv
  firmware/
  data/
    raw/
    calibration/
    qc/
    features/
  docs/
    lab_notebook.md
```

4. Start a lab notebook. Every power-up and rework step gets date, operator, hardware ID, result.

6.2 F.2 Module inspection checkpoints

For both modules: photograph top/bottom/shield/jumpers/Vin-Vout pads/I^{2}C header/SMAs at macro. Confirm no loose solder balls, bent pins, cracked passives, or burned marks. Confirm silkscreen labels (ignore the `AD5355-EVAL` vendor silkscreen; it is a known vendor error — the IC under the shield is AD5933 per the sticker and AD8606 topology).

6.3 F.3 Jumper verification

Go/no-go gate

No board may be powered until all six jumpers are DMM-verified and recorded per the acceptance rule in Section 5.2.

6.4 F.4 Direct-mode power, R_{FB} inventory, and I^{2}C sanity on BOTH modules (before rework, v4.0b)

Frozen rule

This step is the most important procedural change in v4.0. Do **not** rework Module B until both modules are confirmed functional in their as-received Direct state. Otherwise you cannot distinguish a vendor defect from rework damage. v4.0b adds the R_{FB} inventory measurement (G-RFB) and relaxes the quiescent-current rule from a hard gate to a logged reference.

G-RFB (new in v4.0b): on-board R_{FB} inventory. The Chinese clone module's schematic is unpublished. The on-board feedback resistor connected between AD5933 Pin 4 (R_{FB}) and Pin 5 (VIN) determines the transimpedance gain $V_{ADC} = V_{exc} \cdot (R_{FB}/Z_{sample}) \cdot G_{PGA}$. The official EVAL-AD5933EBZ default is $R_{FB} = 200\,\mathrm{k\Omega}$ [2, 1]; the Ibba reference design uses selectable values $200\,\Omega$, $2\,\mathrm{k\Omega}$, $20\,\mathrm{k\Omega}$, $200\,\mathrm{k\Omega}$ [8]. For a milk impedance of $330\,\Omega$ at Range 4, $R_{FB} > 5\,\mathrm{k\Omega}$ would saturate the internal ADC. Therefore R_{FB} must be measured before any wet test.

1. **G-RFB.** With the module *unpowered*, place the DMM in Ω mode and measure the resistance between AD5933 Pin 4 and Pin 5 on each module (use a magnifier to identify the pins; on a 16-pin SSOP the spacing is 0.65 mm). If a hard direct probe is impractical, probe the R_{FB} test pad / SMD endpoints instead. Record both modules' values in `hardware/rfb_inventory.csv`: `module_id, rfb_measured_ohm, dmm_model, date, operator, method (pin-probe / pad-probe)`. **Safety caution (v4.0c):** a slipped probe on the SSOP package can short adjacent pins or damage the IC. Use fine needle probes, work under magnification, and keep the board fully unpowered. *If safe probing is not achievable at your bench, skip direct RFB probing — G-SAT (Section 6.10) will resolve the saturation question empirically. A skipped G-RFB is not a blocker; a damaged module is.*

2. **Decide ahead.** Compare the measured R_{FB} to the milk-target window:
   - $R_{FB} \in [330\,\Omega, 2\,\mathrm{k\Omega}]$: ideal for milk; proceed normally.
   - $R_{FB} \in [2\,\mathrm{k\Omega}, 20\,\mathrm{k\Omega}]$: borderline; G-SAT (Section 6.10) will resolve whether saturation actually occurs at expected milk impedances.
   - $R_{FB} > 20\,\mathrm{k\Omega}$: high probability of ADC saturation at $330\,\Omega$–$700\,\Omega$ milk loads; G-SAT is mandatory and a R_{FB}-rework path or external buffer (datasheet Fig. 35) should be planned.

3. Power Module A alone via its `+5V/GND` terminal block from a bench supply or ESP32 5V pin. No I^{2}C yet.

4. DMM-measure the `+3.3V` header pin: expected 3.30(5) V. Measure quiescent current.

5. **Quiescent-current rule (relaxed in v4.0b).** 15–25 mA is a logged reference range, not a hard fail. **Hard-fail conditions** are: (a) AMS1117 or AD5933 shield rises by $> 15\,^\circ\mathrm{C}$ above ambient within

10 s of power-up; (b) $V_{3.3}$ rail drifts by $> \pm 5\%$ or oscillates; (c) Module A vs Module B current draw differs by $> 50\%$ on identical setup; (d) any visible damage, smell, or audible discharge. If quiescent current is within 10–30 mA and none of (a)–(d) is observed, proceed.

6. Touch AD5933 shield, AD8606 (U1), AMS1117 (U3) with a finger after 30 s: warm is acceptable; uncomfortably hot is not.
7. Power off. Repeat steps 3–6 for Module B.
8. Wire ESP32 to Module A: 5V, GND, SDA→GPIO21, SCL→GPIO22, sharing GND before SDA/SCL.
9. Flash I^2C scanner. Expected: one device at `0x0D`.
10. Read STATUS (`0x8F`) and internal temperature (`0x92/0x93`) 100 times. Expected: stable bus, temperature between 20–35 °C. **Note (v4.0b):** the temperature register stores a 14-bit signed value with D13 as the sign bit and the upper two bits as don't-cares [1]; firmware must mask and sign-extend correctly, otherwise sub-zero readings or transient bit flips will appear as nonsense.
11. Plug 1 kΩ resistor across P1/P2. Run a single-point 10 kHz sweep at Range 4, PGA ×1, settling 15. Record raw *signed* Re/Im values.
12. Swap to Module B. Repeat steps 8–11.

Go/no-go gate

GATE F.4 pass criteria: (i) R_{FB} measured and logged for both modules; (ii) both modules power up cleanly with no hard-fail thermal or rail symptoms; (iii) both respond at `0x0D`; (iv) 100 consecutive register reads without bus error; (v) both return finite, non-saturated, signed real/imaginary values on a 1 kΩ load at 10 kHz. **Only after this gate passes is Module B reworked.**

6.5 F.5 Rework Module B

Perform Section 5 on Module B only. Do not rework Module A. After rework, repeat F.4 steps 5–8 on Module B to confirm it still powers and communicates.

6.6 F.6 DC-bias verification

Perform Section 5.11 (DC-BIAS GATE G-DC3, three-measurement procedure) on both modules. Log to `hardware/dc_bias_check.csv` with columns `module_id, range, condition, V_DC_P1_GND_mV, V_DC_P2_GND_mV, V_DC_DIFF_mV, V_DD_V, date, operator`. The `condition` field is `NOLOAD` or `R470`. Pass/fail is decided on $|V_{DC}(P1-P2)| < 50$ mV.

6.7 F.7 DMM calibration-resistor metrology

1. Record DMM model and accuracy class in `hardware/dmm_inventory.csv`.
2. Warm up DMM for 10 min. Record ambient temperature.
3. Null the leads on Ω mode. Record residual lead resistance.
4. Label all 60 resistors (`R100_01` ... `R10k_10`). Measure each. Record `nominal_ohm, measured_ohm, T_C, operator, timestamp` in `hardware/resistor_inventory.csv`.
5. Remeasure `R1k_01` at start/middle/end of session; must agree within DMM accuracy class.

Open item / clarify

DMM accuracy limitation: the 0.1% resistors are only as trustworthy as the DMM. If the DMM basic accuracy is worse than 0.1% (typical handheld DMMs are 0.5%–1%), the reported metrology is DMM-limited. Record this honestly in the paper's methods.

Go/no-go gate

G-DMMx — Lab-DMM cross-check on the gain-factor anchor (promoted in v4.0c). The per-frequency gain factor is anchored on `R1k_01` (and validated on 1 kΩ, 470 Ω, 330 Ω). Any error in those three measurements propagates through every calibrated $|Z|$ figure in the paper. Therefore, before running the F.10 resistor characterization (and therefore before G-SAT and G-LIN), the three milk-relevant calibration anchors must be cross-checked against the best available reference instrument.

1. Identify the best DMM accessible at IUB EEE lab (4.5-digit benchtop or better preferred; 6.5-digit ideal).
2. Cross-measure `R1k_01`, `R470_01`, `R330_01` on that meter.
3. Log the readings and the meter's accuracy class to `hardware/resistor_inventory.csv` as columns `lab_dmm_ohm`, `lab_dmm_model`, `lab_dmm_accuracy_class_pct`.
4. **Pass:** the lab-DMM and handheld-DMM readings agree within the handheld's accuracy class. Use the lab-DMM value as the calibration anchor downstream.
5. **Fail:** disagreement larger than the handheld's accuracy class indicates the handheld is miscalibrated; do not use it as the calibration anchor. Either substitute the lab-DMM values or borrow a better handheld before proceeding.

If a lab DMM cannot be borrowed in time, this gate is skipped, and the metrology claim in the paper must be explicitly bounded by the handheld's accuracy class. Skipped G-DMMx is a known publication weakness, not a blocker for v1 bench work.

6.8 F.8 Perfboard/fixture build

Breadboard first (temporary); move to perfboard after F.9 passes. Required:

Signal	ESP32 side	AD5933 module side
GND	ESP32 GND (first)	Module GND
SDA	ESP32 GPIO21	Module SDA
SCL	ESP32 GPIO22	Module SCL
Module +5 V	ESP32 5V/Vin pin OR bench supply (NOT BOTH)	Module +5 V terminal
Sample path	not via ESP32	Vin/Vout to DPDT switch, then CAL fixture or cell
DS18B20 data	GPIO4 with 4.7 kΩ pull-up to 3.3 V	(not on module)

6.9 F.9 Parasitic fixture characterization (new)

Go/no-go gate

Before resistor characterization, run the parasitic-fixture suite:

1. **Open test:** DPDT in SAMPLE position, cell cables dangling free, no sample. Sweep as in F.10. Record as `qc/fixture_open.csv`. Expected: very large $|Z|$ (noisy) at low frequency, dropping at high frequency as cable capacitance dominates. Gate: no NaN/invalid status flags; real/imag not saturated.
2. **Short test:** DPDT in SAMPLE position, short the cell cables together with a clean copper wire (shortest possible). Sweep. Expected: small $|Z|$ bounded by lead+cable resistance. Record as `qc/fixture_short.csv`.
3. **Cable-motion test:** plug 1 kΩ into CAL. Start a continuous sweep. Gently flex the cell cables and the DPDT wires. Spectra must not shift visibly. If they do, fix routing and strain relief before proceeding.
4. **Switch-contact test:** actuate DPDT 10 times between CAL and SAMPLE with 1 kΩ plugged into CAL. Resulting $|Z|$ at 10 kHz must be repeatable to within 1%.

6.10 F.10 Resistor calibration and Direct-vs-Dual characterization (v4.0b: with G-SAT and G-LIN)

Default sweep parameters changed in v4.0b. Per UG-364, p. 19 [2], the AD5933 with the internal 16.776 MHz oscillator exhibits significant DFT spectral leakage below approximately 1 kHz and degraded accuracy in the 1–5 kHz band. The initial publication-candidate trusted band is therefore 5–100 kHz with internal MCLK. The 1–5 kHz band may be characterized after 5–100 kHz passes, with explicit annotation; an external 4 MHz MCLK is the optional fallback for that band (Section 8.6).

1. Build a low-leakage resistor CAL fixture with banana-jack or screw terminals at the DPDT CAL position.
2. Sweep order (both modules): 1 kΩ first (anchor for gain factor), then 470 Ω, 330 Ω, 100 Ω, 4.7 kΩ, 10 kΩ. Re-sweep 1 kΩ at the end of the session as a drift check.
3. **Default sweep parameters (v4.0b):** 5–100 kHz in 96 steps of 1 kHz, settling 15 cycles, Range 4, PGA ×1. Three repeats per resistor.
4. Laptop computes magnitude residual, phase residual, coefficient of variation, saturation flags, and the trusted-band map using the equations in Section 8.2.
5. Generate Direct-vs-Dual plots: magnitude error vs frequency, phase residual vs frequency, repeatability CV vs frequency, trusted-band overlay, and a Direct-vs-Dual summary table for 330 Ω/470 Ω/1 kΩ.

F.10.a G-SAT — saturation/clipping characterization (new in v4.0b; clarified in v4.0c)

Go/no-go gate

Important (v4.0c). G-SAT is an *analysis* applied to the resistor-sweep dataset already collected in F.10 above. Do not run a separate sweep for G-SAT; the same six-resistor dataset feeds both the calibration map and this saturation check. The same applies to G-LIN below (it consumes the F.10 470 Ω sweep plus one additional Range-2 sweep on 470 Ω).

Why this gate. For a near-pure resistive load, $|Z|$ is frequency-independent and the per-frequency gain factor times the measured DFT magnitude equals $1/R$ within calibration tolerance. If the receive-stage TIA + ADC is being clipped, the apparent magnitude underestimates the true current, so $\mathrm{GF} \cdot M$ no longer scales as $1/R$ across the resistor set. This is the cleanest empirical detector of saturation when the on-board R_{FB} is unknown.

Procedure (analysis on F.10 data).

1. Use the F.10 sweeps for 100 Ω, 330 Ω, 470 Ω, 1 kΩ, 4.7 kΩ, 10 kΩ (Range 4, PGA ×1, settling 15, 5–100 kHz, 3 repeats each).
2. Anchor: choose the 1 kΩ sweep as the gain-factor anchor (per Section 8.2).
3. For each other resistor at each frequency, compute the apparent calibrated $|Z|$ and the residual $\varepsilon_R(f) = (|Z_{\mathrm{meas}}|(f) - R_{\mathrm{DMM}})/R_{\mathrm{DMM}}$. Use the lab-DMM-validated R_{DMM} values from G-DMMx where available.
4. **Pass:** For 330 Ω, 470 Ω, 4.7 kΩ resistors, $|\varepsilon_R(f)| \leq 5\%$ across a contiguous trusted band of ≥ 20 kHz width within 5–100 kHz. 10 kΩ and 100 Ω may show larger residuals at the band edges, especially at low frequencies (100 Ω is below the AD5933's stated native range).
5. **Fail signature for saturation:** the 330 Ω, 470 Ω resistors read *high* ($|Z_{\mathrm{meas}}| > R_{\mathrm{DMM}}$, $\varepsilon_R > +5\%$) by an amount that grows monotonically as resistance decreases. This is the fingerprint of a clipped sinusoid producing reduced fundamental-frequency DFT magnitude.
6. **If G-SAT fails:** do not collect milk data on this module. Remediation paths, in order of preference: (a) try Module B in Dual-op-amp mode – the AD8606 may already provide adequate input-side gain reduction; (b) R_{FB} rework: desolder the on-board R_{FB} component (identified by tracing AD5933 Pin 4 to its associated SMD resistor) and replace with a precision SMD resistor matched to the milk impedance (470 Ω–1 kΩ); document with photos, update `hardware/rfb_inventory.csv`, and re-run G-SAT; (c) external attenuator + buffer per AD5933 datasheet Fig. 35 [1] – an op-amp (e.g. AD8606 spare channel, AD8627, AD820) with a resistor divider on VOUT and a virtual-$V_{DD}/2$ reference; out of scope for the v1 milk experiment but documented as the publication-grade fallback.

F.10.b G-LIN — amplitude-linearity characterization (new in v4.0b; clarified in v4.0c)

Go/no-go gate

Important (v4.0c). G-LIN consumes the Range-4 470 Ω sweep already collected in F.10, plus exactly one additional sweep: 470 Ω at Range 2. No other new sweeps are required.

Why this gate. Standard EIS practice requires the system to be in its linear small-signal regime: the calibrated $|Z|$ of a passive load must be independent of excitation amplitude. If $|Z|$ measured at Range 4 differs from $|Z|$ measured at Range 2 on the same resistor, either the AD5933 is operating non-linearly, the on-board AFE is amplitude-dependent, or there is an unexpected DC-bias-induced effect. Resolving this before milk is a strong publication argument.

Procedure.

1. Anchor: Range-4 sweep on 470 Ω from F.10 (already collected).
2. Repeat the 470 Ω sweep at Range 2 (970 mV pp, $V_{DC} = 0.76$ V). Do not run Range 2 if G-DC3 has not also passed at Range 2.
3. Calibrate the Range-2 sweep using a Range-2 1 kΩ gain factor (computed independently of Range 4: the gain factor is range-dependent because of the different VOUT source impedance, see datasheet Table 17 [1]). This requires one additional 1 kΩ sweep at Range 2.
4. **Pass:** $||Z|_{\text{Range2}}(f) - |Z|_{\text{Range4}}(f)|/R_{\text{DMM}} \leq 2\%$ across the trusted band.
5. **If G-LIN fails:** the apparent impedance is amplitude-dependent. Investigate before continuing; possible causes include G-SAT failure (clipping), AC-coupling cap not properly absorbed, or a mode-switch artifact. Document and remediate before milk.

Open item / clarify

Settling-cycles guidance: start at 15 cycles; if the first few frequency points of a fresh sweep disagree with the rest of the sweep by more than repeat CV, increase settling to 30 or 100. Too many settling cycles slow the sweep but rarely hurt accuracy; too few cause the first points to be biased.

6.11 F.11 Cell assembly workflow

1. Print three cell bodies from the same CAD revision.
2. Cut three matched SS316L electrode pairs once material arrives. Deburr. Do not scratch active faces.
3. Install electrodes into fixed printed slots.
4. Solder/crimp cables above the liquid line; add strain relief; no exposed solder in milk.
5. Mark fill line and electrode immersion line.
6. Assign cell IDs: `CELL01`, `CELL02`, `CELL03`. Photograph each.
7. Dry-insulation test: DMM between the two electrode leads, cell empty. Expected > 20 MΩ. If < 10 MΩ, diagnose mechanical short.

6.12 F.12 First dry tests in the cell

- **Open fixture in cell slot:** verify system reports invalid/noisy behavior. Do not treat open data as real impedance.
- **Known resistor inserted in cell slot:** verify calibrated result matches actual resistor.
- **Cable motion test in cell slot:** repeat F.9 step 3 but with the cell mounted.

6.13 F.13 DI water tests

DI water is a blank/carryover check, not a calibration standard.

1. Fill cell to the marked volume.
2. Settle 60 s.
3. Read DS18B20 sample probe.
4. Sweep 3–5 times.
5. Read DS18B20 again.
6. Empty, rinse, repeat.

Go/no-go gate

Pass: DI blank behavior qualitatively repeatable between fills. **Fail:** large drift, visible bubbles, cable-position dependence.

6.14 F.14 Pure milk tests

1. One UHT brand, one fat class for the first repeatability test.
2. Mix gently and identically every time; avoid foam.
3. Bring sample into a narrow temperature window.
4. Fill to fixed volume.
5. Remove bubbles from electrode surfaces.
6. Pre-sweep DS18B20.
7. Five repeats without moving the cell.
8. Post-sweep DS18B20.
9. Clean electrodes; run DI blank before the next sample.

6.15 F.15 Repeatability checks

Check	Minimum v1 requirement
Within-fill repeatability	Five sweeps of the same milk fill stable over trusted band.
Refill repeatability	Empty, clean, refill same milk; spectrum within empirical limits.
Cross-session repeatability	Same milk measured on different days with fresh calibration.
Cell-to-cell repeatability	Same milk through `CELL01`–`CELL03`.
Cleaning/carryover	DI blank after milk does not retain milk-like spectrum.

6.16 F.16 Data logging and file organization

```
data/
  raw/YYYY-MM-DD/session_id/
  calibration/YYYY-MM-DD/session_id/
  qc/YYYY-MM-DD/session_id/
  features/YYYY-MM-DD/session_id/
  models/YYYY-MM-DD/
hardware/
  photos/
  jumper_state.csv
  resistor_inventory.csv
  dmm_inventory.csv
```

```
dc_bias_check.csv
cell_geometry.csv
probe_inventory.csv
```

6.17 F.17 Go/no-go matrix (v4.0c)

Stage	Go criterion	No-go action
Jumper verification	Mode matches truth table.	Do not power; inspect.
G-RFB (v4.0b)	R_{FB} measured between Pin 4–Pin 5; logged. *Skippable in v4.0c if SSOP probing is unsafe; G-SAT will resolve.*	Use the decision tree in F.4 to route to either G-SAT or rework planning.
Power rail test	+5 V and +3.3 V plausible and stable; no F.4 hard-fail.	Stop; inspect regulator/wiring.
I^2C sanity	100 clean reads; 1 kΩ returns sensible *signed* Re/Im.	Fix bus; verify pull-ups; verify int16 parsing.
Post-rework sanity (Module B)	Same as above after rework.	Stop; re-inspect rework.
G-DC3 (v4.0b)	$\lvert V_{DC}(P1-P2)\rvert < 50\,\mathrm{mV}$ under no-load and 470 Ω-loaded, at Range 4. Absolute pad voltages logged.	Add AC-coupling cap (10 µF min, in CAL+SAMPLE paths upstream of DPDT), OR use Module B Dual-AFE.
Parasitic fixture	Open/short/motion/switch acceptable.	Fix cabling/fixture.
G-DMMx (NEW v4.0c)	1 kΩ, 470 Ω, 330 Ω cross-checked on a benchtop lab DMM; agreement within handheld accuracy class.	If lab DMM unavailable, gate is skipped; metrology claim bounded by handheld accuracy.
G-SAT (v4.0b; analysis on F.10 data)	On 330 Ω/470 Ω/4.7 kΩ: $\lvert\varepsilon_R(f)\rvert \le 5\%$ over ≥ 20 kHz band within 5–100 kHz.	Module B Dual-AFE; or R_{FB} rework; or external attenuator/buffer.
G-LIN (v4.0b; analysis on F.10 data + 1 extra Range-2 sweep)	Range-4 vs Range-2 470 Ω: agreement $\le 2\%$.	Investigate amplitude dependence before milk.
Resistor primary band	330 Ω/470 Ω/1 kΩ pass thresholds in trusted band.	No milk data; debug AFE/path.
DI-water blank	Repeatable.	Fix cleaning/cell/cables.
Pure milk repeatability	Stable within and across refills.	No adulteration study.
Adulteration session	CAL and pure control both pass same day.	Discard session.

7 SECTION G — Final cell design and implementation guidance

7.1 G.1 Final recommended cell architecture

Fixed-geometry two-electrode parallel-plate cell, SS316L electrodes mounted rigidly in a 3D-printed PETG body. Cell is part of the instrument, not a disposable cup.

Open item / clarify

Geometry below is a v1 candidate, not permanent scientific truth. It is frozen for publication only after parasitic fixture checks, DI-water blanks, pure milk repeatability, and cell-to-cell reproducibility pass.

7.2 G.2 Electrode material

- **Final material:** SS316L.
- **SS304 status:** mockup only. Do not mix SS304 and SS316L data.
- **Authenticity:** confirm via seller invoice, receipt wording, or certificate; magnet test (austenitic 316L is weakly magnetic at most); soak a small sample in 0.9% saline for 24 h — no visible pitting on genuine 316L.

7.3 G.3 v1 candidate electrode dimensions

Parameter	v1 candidate
Electrode material	SS316L, 0.5–1.0 mm thick.
Active wet face	$\approx$ 8 mm wide $\times$ 12 mm immersed height per electrode.
Facing-surface gap	12 mm fixed.
Immersion depth control	Printed fill mark and electrode stop; no freehand depth.
Sample volume	20–30 mL; exact volume fixed and logged.
Cable connection	Solder/crimp above liquid line; strain relief; no exposed solder in milk.
Cell count	Three identical printed cells from one CAD revision.

Open item / clarify

Geometry fallback rule: if resistor characterization shows Module B Dual-AFE cannot handle milk loads below $\approx 500\,\Omega$, adjust cell constant $\kappa = L/A$ *upward* (increase gap, decrease area) to push expected milk impedance into the board's trusted window. This changes cell geometry and resets the dataset — so decide before data collection begins.

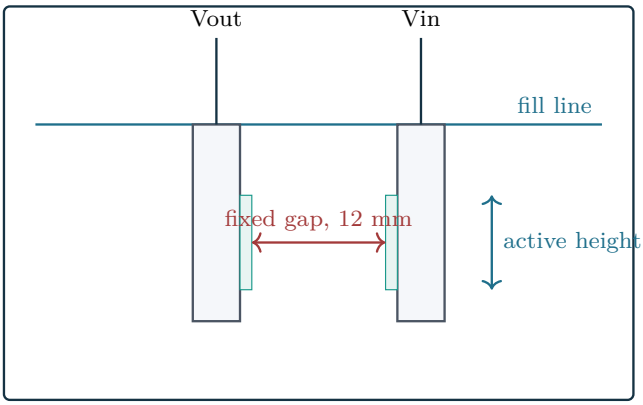

Fixed-geometry two-electrode SS316L cell: no hand-adjusted spacing during data collection.

Figure 6: Cell geometry schematic. Dimensions are v1 candidates until repeatability gates pass.

7.4 G.4 Cable routing

- Keep Vin/Vout leads short ($\leq 150\,\mathrm{mm}$).
- First tests use short twisted pair. Coax only if shield termination is deliberate.
- Avoid ground loops through the liquid cell.
- Mechanical strain relief so cable motion does not move electrodes.
- Cable route must be identical across cells for cell-to-cell comparison.

7.5 G.5 Mounting strategy

- Electrodes slide into printed slots with hard stops.
- Clamping screws must not bend electrodes.
- Active area defined by geometry, not by fill-level variation.
- DS18B20 holder places the probe near sample but not touching electrodes.
- Cell allows visual bubble inspection.

7.6 G.6 Cleaning strategy

1. Immediately after milk, rinse with DI/distilled water.
2. Mild detergent wash if milk film visible or blank fails.
3. Rinse thoroughly with DI.
4. Optional IPA wipe; do not depend on IPA alone for dairy protein.
5. Air dry or lint-free wipe.
6. DI blank before next dataset sample.

7.7 G.7 Fusion 360 and 3D-printing notes

- Parameterize: electrode width, gap, immersion height, fill volume, wall thickness, cable exit angle.
- Engrave labels: `CELL01/02/03`, fill line, Vin/Vout side.
- Print all three in the same orientation and material batch.
- PETG preferred over PLA (milk fat tolerance).
- Record slicer settings, material, nozzle size, layer height, print date.
- Post-process: IPA wipe and 60 °C DI water soak 30 min $\times$ 3 cycles before first use.

7.8 G.8 Fixed vs adjustable features

Feature	Status	Reason
Electrode spacing	Fixed	Changes cell constant.
Active area	Fixed	Changes cell constant.
Immersion depth / fill level	Fixed	Changes interface conditions.
Cable strain relief	Fixed during data	Prevents motion artifacts.
DS18B20 position	Fixed after validation	Reduces temperature variability.

Cell lid/cover	Adjustable for usability	Must not alter electrode geometry.

8 SECTION H — Calibration, QC, and measurement protocol

8.1 H.1 DMM metrology of calibration resistors

1. Label each resistor (`R330_01` etc.).
2. DMM-measure after probe stabilization.
3. Record actual value, nominal value, date, operator, DMM model, DMM accuracy class, room temperature.
4. Use the measured values in calibration metadata, not the nominal values.

Open item / clarify

DMM accuracy bound. Report the metrology limitation honestly in the paper: "calibration resistors specified at 0.1% tolerance, DMM-measured on a [model, accuracy class] meter; measurements therefore bounded by DMM accuracy."

8.2 H.2 Gain and phase calibration (notation corrected)

At each frequency point f_i the AD5933 returns signed real and imaginary DFT register values, denoted $R_{\mathrm{DFT}}(f_i)$ and $I_{\mathrm{DFT}}(f_i)$. The DFT magnitude is

$$M(f_i) = \sqrt{R_{\mathrm{DFT}}(f_i)^2 + I_{\mathrm{DFT}}(f_i)^2}. \tag{1}$$

Let R_{cal} be the DMM-measured resistance of the calibration resistor. With a near-pure resistive load $Z_{\mathrm{cal}} = R_{\mathrm{cal}}$, the per-frequency gain factor is

$$GF(f_i) = \frac{1}{R_{\mathrm{cal}}\, M_{\mathrm{cal}}(f_i)}. \tag{2}$$

For an unknown sample, the calibrated impedance magnitude is

$$|Z_{\mathrm{unk}}(f_i)| = \frac{1}{GF(f_i)\, M_{\mathrm{unk}}(f_i)}. \tag{3}$$

The raw DFT phase is

$$\phi_{\mathrm{raw}}(f_i) = \mathrm{atan2}(I_{\mathrm{DFT}}(f_i),\, R_{\mathrm{DFT}}(f_i))\,. \tag{4}$$

A near-ideal calibration resistor has zero impedance phase. The measured resistor DFT phase is therefore treated as the system phase offset:

$$\phi_{\mathrm{system}}(f_i) = \mathrm{atan2}(I_{\mathrm{DFT,cal}}(f_i),\, R_{\mathrm{DFT,cal}}(f_i))\,. \tag{5}$$

The corrected sample phase is

$$\phi_{\mathrm{sample}}(f_i) = \mathrm{atan2}(I_{\mathrm{DFT,sample}}(f_i),\, R_{\mathrm{DFT,sample}}(f_i)) - \phi_{\mathrm{system}}(f_i). \tag{6}$$

If reported in degrees, convert after correction:

$$\phi_{\mathrm{sample,deg}}(f_i) = \phi_{\mathrm{sample}}(f_i) \cdot \frac{180}{\pi}. \tag{7}$$

Frozen rule

Phase must be unwrapped (e.g., with NumPy `numpy.unwrap`) before any slope, derivative, or Nyquist-arc feature is computed. Raw `atan2` output has $\pm\pi$ jumps that break downstream analysis.

Open item / clarify

For milk-range work, prefer a multi-load calibration/validation map rather than a single global gain factor. The calibration resistor should bracket the expected unknown impedance region. For v1, 330 Ω/470 Ω/1 kΩ are the primary milk-relevant calibration/validation loads.

8.3 H.3 Resistor characterization of both modes/modules

Load group	Purpose
330 Ω, 470 Ω, 1 kΩ	Primary milk-relevant acceptance band. Module B must pass here before milk data.
100 Ω	Low-bound stress test.
4.7 kΩ, 10 kΩ	Higher-range characterization.

8.4 H.4 Empirical acceptance thresholds

Metric	Minimum v1 go criterion	Stronger paper target
Magnitude residual on primary resistors	$\leq 3\%$ over contiguous trusted band	$\leq 1.5\%$
Resistive-load phase residual	$\leq 5°$ over trusted band	$\leq 3°$
Within-session CV on resistor magnitude	$\leq 1\%$	$\leq 0.5\%$
Trusted band coverage	At least one contiguous band with enough points for features	Broad, stable band across most planned sweep
End-of-session resistor check	Drift $\leq 2\%$ from start check	Drift $\leq 1\%$
DC-bias at electrodes	< 50 mV at chosen range	< 20 mV

8.5 H.5 Trusted-band selection (v4.0b: 5–100 kHz initial candidate)

Initial publication-candidate trusted band: 5–100 kHz with internal 16.776 MHz MCLK. The AD5933 internal-oscillator behavior, per UG-364, p. 19 [2], exhibits significant DFT spectral leakage when the excitation period is comparable to or shorter than the 1024-sample DFT window (977 µs). At 1 kHz (period 1.0 ms) the window captures less than one full period, and accuracy degrades. Per-frequency calibration with a known resistor partially absorbs this error but does not eliminate it for non-resistive samples. The conservative ceiling is therefore the 5 kHz lower bound published in UG-364's Table 2 for the 16 MHz clock.

Sub-5 kHz operation is permitted only after empirical validation: resistor characterization at the candidate sub-5 kHz points must show $|\varepsilon_R| \leq 5\%$ on 330 Ω/470 Ω/1 kΩ across ≥ 3 contiguous frequency points. Any sub-5 kHz data published from this prototype must be plotted with an explicit annotation (e.g. shaded band, footnote citing UG-364) that distinguishes it from the conservative band. The optional fallback is to drive an external 4 MHz MCLK from an ESP32 PWM output into the AD5933 EXT-CLK SMA, with the control register `0x81[D3]` updated to select external MCLK.

A frequency point is in the trusted band only if all of the following hold:

- it passes the magnitude residual threshold for 330 Ω/470 Ω/1 kΩ (or a documented justified subset);
- phase residual is not pathological on resistors;

- replicate CV is acceptable;
- AD5933 status flags are valid;
- no phase discontinuity or saturation appears;
- G-SAT did not flag the load as clipping at this frequency point.

8.6 H.6 Excitation range and settling cycles (v4.0b: corrected rationale)

Frozen rule

Default for milk v1: Range 4 (198 mV pp AC, 173 mV DC bias on the VOUT pin, 600 Ω source impedance [1]).

Why Range 4 (corrected in v4.0b). Range 4 minimizes the *AC excitation amplitude* across the load, which is the standard EIS practice for staying in the small-signal linear regime ($V_{\mathrm{ac}} \leq 20\,\mathrm{mV}$ across each electrode is a common literature target; Range 4's 99 mV half-amplitude is acceptable for the milk impedance range we expect). Range 4 does **not** minimize the differential DC potential $V(P1-P2)$ across the load when the impedance is connected directly between VOUT and VIN. The receive stage VIN is hard-biased at $V_{DD}/2 \approx 1.65\,\mathrm{V}$ [1], so the differential DC across the load is approximately

$$V_{DC}(P1-P2) \;\approx\; V_{DD}/2 \;-\; V_{\mathrm{VOUT,DC}}(\mathrm{range}).$$

Numerically, at $V_{DD} = 3.3\,\mathrm{V}$:

Range	$V_{\mathrm{VOUT,DC}}$	$V_{DC}(P1-P2)$ **ideal**
Range 1	1.48 V	≈ 0.17 V
Range 2	0.76 V	≈ 0.89 V
Range 3	0.31 V	≈ 1.34 V
Range 4	0.173 V	≈ 1.48 V

In other words, in raw Direct mode without AC coupling and without the AD8606 buffer, Range 4 actually maximizes the differential DC across the load — a counter-intuitive result that v4.0 had inverted. The rationale for choosing Range 4 over Range 1 is therefore *linearity, not electrolysis*. Electrolysis is addressed by the G-DC3 gate (Section 5.11), which mandates either AC-coupling (E.11.a) or Dual-op-amp-mode buffering (Module B) to bring the differential below 50 mV, irrespective of range selection.

Range escalation rule. Use Range 4 by default. Escalate to Range 2 only if Range 4 SNR is insufficient *and* the G-DC3 gate also passes at Range 2 *and* G-LIN agreement holds between Ranges 2 and 4. Range 1 (1.98 V pp) is reserved for resistor characterization in the Direct-mode comparison module only; it is not used for milk.

Settling cycles: default 15; increase to 30 or 100 if first-point bias is observed (per F.10 settling guidance).

PGA: ×1 default; ×5 only after G-SAT confirms there is headroom for the 5× gain.

8.7 H.7 Board and sample temperature logging

- AD5933 internal temperature register: log as `ad5933_temp_c` (board/die only).
- DS18B20 sample probe: read before and after sweep only; never during AD5933 conversion.
- Reject a sweep with $|T_{\mathrm{after}} - T_{\mathrm{before}}| > 0.5\,^{\circ}\mathrm{C}$ (early tests may relax this).

8.8 H.8 Sweep QC and rejection rules

Reject a sweep if any of: missing frequency points; AD5933 status timeout or invalid-data flag; real/imag saturation; phase jump > 10° on adjacent resistor points without physical justification; non-physical or negative magnitude; DS18B20 pre/post drift exceeded; CAL check before or after session fails; visible bubbles on electrodes; wrong fill volume; cable moved during sweep; post-milk DI blank fails.

8.9 H.9 Within-session and cross-session repeatability

Test	Protocol
Within-session resistor	5 sweeps per resistor without moving fixture.
Within-session milk	5 sweeps per fill, same milk, no cable/cell movement.
Refill	Empty, clean, refill same sample type.
Cross-session	Recalibrate on a different day and repeat pure milk.
Cell-to-cell	Same milk through `CELL01`–`CELL03`.

8.10 H.10 Contamination/carryover control

1. DI blank before first milk sample.
2. Measure pure milk.
3. Clean cell per SOP.
4. DI blank again.
5. If blank contaminated, repeat cleaning; mark preceding sample suspect.
6. Null milk-to-milk (pure-into-pure) check after every third adulterated sample.

8.11 H.11 Electrode cleaning SOP

Step	Action
1	Rinse with DI/distilled water immediately after milk.
2	Gently wash active faces with mild detergent if film visible or blank failed.
3	Rinse thoroughly with DI.
4	Shake dry; wipe with lint-free tissue.
5	Visually inspect for film, spots, bubbles, scratches.
6	DI blank before next dataset sample.

8.12 H.12 Electrode-polarization warning (new)

Reviewer-risk warning

For a two-electrode SS316L cell in milk, low-frequency impedance ($\lesssim 1\,\mathrm{kHz}$, sometimes up to a few kilohertz) is typically dominated by electrode polarization at the metal–electrolyte interface, not bulk milk properties. This is a standard reviewer point. State it explicitly in the paper; select the trusted band *above* the polarization region; if necessary, note that a four-electrode geometry (future work) would reduce this effect. The v1 paper claim must be constrained to the trusted band where polarization is small enough.

9 SECTION I — Software and data architecture

9.1 I.1 Pipeline overview

9.2 I.2 ESP32 firmware responsibilities

- Initialize I^2C and AD5933.
- Configure start frequency, increment, number of increments, settling cycles, excitation range, PGA.

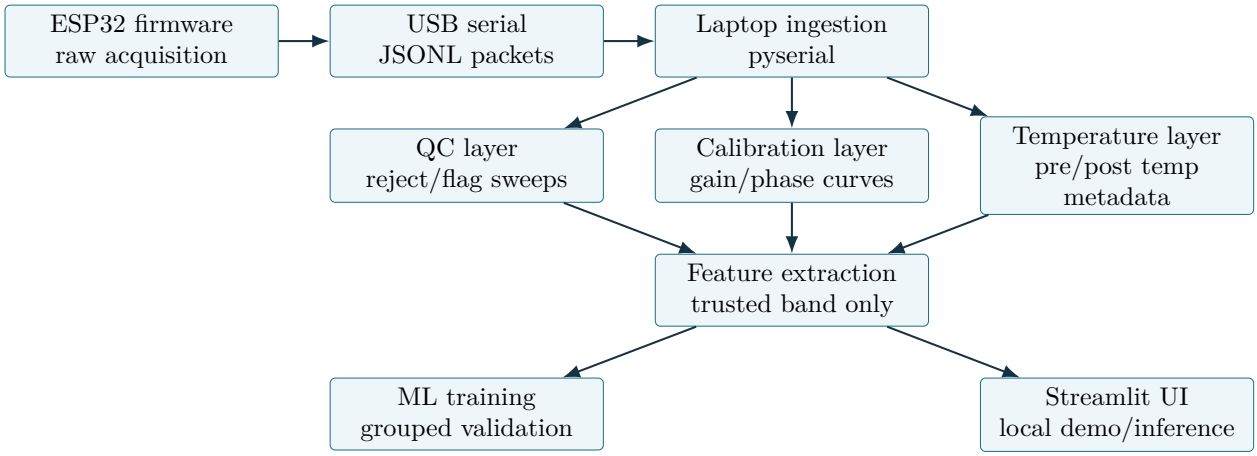

Figure 7: Data/software pipeline. Calibration and QC occur before feature extraction.

- Start sweep; poll STATUS (`0x8F`); read real (`0x94/0x95`) and imaginary (`0x96/0x97`) per point.
- Read AD5933 internal temperature (`0x92/0x93`) before and after sweep.
- Read DS18B20 before and after sweep only.
- Stream raw data plus metadata as JSONL.
- Watchdog: if sweep-complete status does not appear within expected time, soft-reset AD5933 and report error.

I.2.a Signed register parsing (frozen rule, v4.0b)

Frozen rule

The AD5933 stores DFT real (`0x94/0x95`) and imaginary (`0x96/0x97`) results in twos-complement 16-bit format [1]. The internal temperature register (`0x92/0x93`) is 14-bit signed; D13 is the sign bit; the upper two bits are don't-cares. Firmware must read MSB and LSB as separate bytes, combine them, and interpret as `int16_t` (not `uint16_t`). The signed integers are streamed directly in the JSONL `data` record; the ESP32 does not compute magnitude/phase. The Python ingestion layer must range-validate incoming `real` and `imag` values against $[-32768, +32767]$ and refuse any record outside that range. Phase is unwrapped (`numpy.unwrap`) before any slope or derivative feature. A firmware regression test must exercise both branches – a known small-negative real component (e.g. a capacitive load at high frequency) and a known small-positive real component – to confirm sign handling.

Reference C/C++ implementation:

```
// Real / imag: full 16-bit signed
int16_t real_val = (int16_t)(((uint16_t)real_msb << 8) | real_lsb);
int16_t imag_val = (int16_t)(((uint16_t)imag_msb << 8) | imag_lsb);

// Internal temperature: 14-bit signed in 16-bit envelope
uint16_t raw = ((uint16_t)temp_msb << 8) | temp_lsb;
int16_t  s14 = (int16_t)(raw & 0x3FFF);
if (s14 & 0x2000) s14 -= 0x4000;       // sign-extend D13
float t_c = s14 * 0.03125f;            // 1/32 degC per LSB
```

Reference Python ingestion:

```
def parse_ri(msb, lsb):                # for real and imag registers
    return int.from_bytes(bytes([msb, lsb]), 'big', signed=True)

assert -32768 <= real_val <= 32767     # range guard at ingest
```

9.3 I.3 What ESP32 must not do in v1

Frozen rule

No calibration math, no ML inference, no cloud, no UI. Boring and reliable.

9.4 I.4 Serial packet format (JSONL)

```
{"type":"hello","fw":"eisight-fw-0.1.0","module_id":"AD5933-B-DUAL-AFE"}
{"type":"sweep_begin","session_id":"2026-04-24_S01",
 "sweep_id":"SWP0001","module_id":"AD5933-B-DUAL-AFE",
 "cell_id":"CAL_FIXTURE","row_type":"CAL","load_id":"R470_03",
 "start_hz":5000,"stop_hz":100000,"points":96,
 "range":"RANGE_4","pga":"X1","settling_cycles":15,
 "ds18b20_pre_c":25.12,"ad5933_pre_c":31.0}
{"type":"data","sweep_id":"SWP0001","idx":0,
 "frequency_hz":5000.0,"real":1234,"imag":-567,"status":2}
{"type":"sweep_end","sweep_id":"SWP0001",
 "ds18b20_post_c":25.14,"ad5933_post_c":31.1,
 "elapsed_ms":1800,"error":null}
```

The packet uses the v4.0c default sweep parameters (5–100 kHz, 96 steps of 1 kHz, Range 4). For exploratory sub-5 kHz characterization runs (Section 8.5), use `start_hz` as low as 1000 Hz and adjust `points` accordingly, and tag the row in `row_type` or `notes` as `LFEXPLORATORY` so downstream QC can separate it from publication-band data.

9.5 I.5 Raw CSV schema

Column	Description
session_id	Date/session identifier.
sweep_id	Unique sweep ID.
row_type	`CAL`, `SAMPLE`, `BLANK`, `CONTROL`, `OPEN`, `SHORT`.
module_id	`AD5933-A-DIRECT` or `AD5933-B-DUAL-AFE`.
cell_id	CAL fixture or cell ID.
sample_id	Sample identifier.
load_id	Resistor ID for calibration rows.
frequency_hz	Frequency point.
real_raw	Signed DFT real register value.
imag_raw	Signed DFT imaginary register value.
status	AD5933 STATUS register.
range_setting	AD5933 excitation range.
pga_setting	PGA setting.
settling_cycles	Programmed settling cycles.
ds18b20_pre_c	Sample temperature before sweep.
ds18b20_post_c	Sample temperature after sweep.
ad5933_pre_c	AD5933 die temperature before sweep.
ad5933_post_c	AD5933 die temperature after sweep.
operator	Operator initials.
notes	Anomaly note.

9.6 I.6 Calibration CSV schema

Column	Description
session_id	Calibration session ID.
module_id	Module used.
load_id	Resistor ID.
nominal_ohm	Nominal value.
actual_ohm	DMM-measured value.
dmm_model	DMM model used for metrology.
dmm_accuracy_class_-pct	DMM basic accuracy (%).
frequency_hz	Frequency point.
gain_factor	Per-frequency gain factor.
phase_system_deg	System phase from resistor.
repeat_cv_percent	Repeatability CV.
trusted_flag	Point valid for downstream use.

9.7 I.7 Feature table schema

Column	Description
sample_id	Sample identifier.
sweep_id	Source sweep.
session_id	Session.
day_group	Day grouping for validation.
brand_group	Milk brand group.
cell_id	Cell ID.
label	Pure/adulterated/concentration label.
trusted_band_start_hz	Lower bound of accepted band.
trusted_band_stop_hz	Upper bound of accepted band.
zmag_mean, zmag_slope, phase_mean, phase_slope, f_c	Spectral features.
nyquist_area	Area-like feature on trusted band.
qc_pass	Sweep-level QC boolean.
reject_reason	Empty if accepted.

9.8 I.8 Firmware/software milestone order

1. I^2C scanner.
2. AD5933 register read/write.
3. Short single-frequency test.
4. Full sweep.
5. DS18B20 read before/after.
6. JSONL serial output.
7. Laptop ingestion and raw logging.

8. Calibration table generation.
9. QC/rejection rules.
10. Parasitic fixture analysis helpers.
11. Trusted-band feature extraction.
12. Streamlit dashboard.
13. ML training with grouped validation.
14. Optional live-inference mode for demo.

10 SECTION J — Research audit and publication plan

10.1 J.1 Strengths

Strong national relevance; correct scope pivot to milk-first; real inspected hardware; appropriate calibration resistor set; Direct-vs-Dual module comparison as instrumentation figure; laptop-side pipeline allows rigorous QC.

10.2 J.2 Weaknesses

No validated impedance data yet; no reference instrument comparison; no proven SS316L cell; no confirmed trusted band; no empirical temperature correction; no blind validation; synthetic ML performance is not evidence.

10.3 J.3 Likely reviewer attacks

Reviewer-risk warning

1. "How do you know the AD5933 is accurate in milk's impedance range?"
2. "Where is the reference-instrument comparison?"
3. "Does the model detect adulteration or just day/brand/temperature drift?"
4. "Why two electrodes instead of four? How do you handle polarization?"
5. "What is the DC bias at the electrodes? Are you electrolyzing your sample?"
6. "How did you control electrode fouling and bubbles?"
7. "Are repeated sweeps leaking between train and test?"
8. "What is the limit of detection and uncertainty?"
9. "What is novel beyond an already published EIS+ML concept?"

10.4 J.4 Mandatory experiments

Experiment	Why mandatory
Direct-mode sanity (both boards)	Proves hardware works before rework attribution.
Resistor characterization, Module A vs B	Proves analog mode choice and trusted band.
DC-bias gate at electrodes	Proves no electrolysis risk.

Parasitic fixture (open/short/motion/switch)	Isolates cable/switch artifacts.
Pure milk within-session repeatability	Proves the sensor measures a stable liquid.
Pure milk cross-session repeatability	Proves calibration/cleaning survive days.
DI-water blank/carryover	Proves cleaning is not fiction.
Water-dilution series	Safest first adulteration model.
Blind holdout samples	Prevents overfitted demo.
Cell-to-cell reproducibility	Printed cell is not a one-off artifact.
Temperature perturbation subset	Quantifies temperature sensitivity.

10.5 J.5 Defensible novelty claim

> This study presents a low-cost, calibration-audited AD5933/ESP32 milk-EIS prototype with explicit hardware-mode validation (Direct vs Dual-op-amp), DC-bias verification at the electrodes, SS316L fixed-geometry cell design, session-wise calibration, sweep QC, and grouped ML validation for controlled milk-adulteration screening.

Do not claim: first EIS milk detector; universal food adulteration platform; field-ready deployment; clinical-grade accuracy; smartphone/TinyML/cloud device unless implemented; high accuracy from synthetic data.

10.6 J.6 Minimum / stronger / journal versions

Minimum publishable: Module A vs Module B resistor characterization; one SS316L cell; one brand; water dilution; ≥ 3 measurement days; session-wise calibration; day-grouped validation.

Stronger conference: three printed cells; multiple brands; blind samples; reference-LCR cross-check on resistors and subset of liquids; Direct-vs-Dual AFE ablation; temperature ablation; confidence intervals.

Journal-oriented: larger dataset across brands/days/operators/cells; reference-lab validation; formal uncertainty budget; LOD analysis; multiple adulterants; external validation set; long-term drift study; open dataset.

11 SECTION K — Risk register and troubleshooting matrix

11.1 K.1 Experimental validation ladder

11.2 K.2 Risk register

Risk	Likely cause	How to test	Immediate fix	Decision
Wrong jumper mode	Visual assumption instead of DMM	DMM all six jumpers unpowered	Rework Module B only	No-go until fixed
Vendor-defective board	Dead rail, bad part	Direct-mode power/I^2C BEFORE rework	Return/replace before rework	No-go
Failed rework	Incomplete bridge, lifted pad, short	DMM post-rework, macro photo	Clean/rework if minor; stop if pad risk	Discard data
DC bias at electrodes (differential)	No AC cap; raw Direct connection between VOUT bias and VDD/2-biased VIN	G-DC3 three-measurement gate at P1/P2 under active excitation, no-load and 470 Ω-loaded	AC-coupling cap (10 µF min, 47 µF preferred) in CAL+SAMPLE paths, OR Module B Dual-AFE	Discard wet data until fixed (v4.0b)

Risk	Likely cause	How to test	Immediate fix	Decision
TIA / R_{FB} saturation (NEW v4.0b)	On-board R_{FB} too large for milk impedance ($R_{FB}/Z \cdot V_{\text{exc}} > V_{DD}$)	G-RFB inventory + G-SAT resistor sweep	Module B Dual-AFE; or R_{FB} rework to 470 Ω–1 kΩ; or external attenuator/buffer per datasheet Fig. 35	No milk data until G-SAT passes
Low-frequency DFT spectral leakage (NEW v4.0b)	Internal MCLK + sub-5 kHz excitation: 1024-sample window does not cover integer periods	Resistor sweep at sub-5 kHz vs ≥5 kHz; check ε_R	Restrict trusted band to 5–100 kHz; external 4 MHz MCLK if sub-5 kHz needed	Flag and exclude sub-5 kHz unless validated
AC-coupling cap calibration leak (NEW v4.0b)	Cap installed in SAMPLE path only, not CAL path	Compare CAL-with-cap vs CAL-without-cap GF	Move cap upstream of DPDT common; full recalibration	Invalidate sessions where mismatch present
Unsigned register parsing (NEW v4.0b)	Firmware reads `0x94`–`0x97` as `uint16_t`	Capacitive-load test; check whether negative-real points appear as ∼65000 instead of small negative	Update firmware to `int16_t` per Section 9.2.a; pipeline range-validates (−32768..32767)	Reprocess raw data; recompute features
I²C not detected	Wrong address, wiring, pull-up, power, GND	Scanner + DMM rails	Common GND first; 3.3 V pull-ups	No-go
I²C pulled to 5 V by mistake	Pull-up to wrong rail	DMM on SDA/SCL idle	Rewire pull-up to 3.3 V	Inspect ESP32 pins for damage
Unstable Re/Im	Noise, contacts, cable motion	Repeated resistor sweeps	Fix fixture/cables	Discard unstable sweeps
330 Ω/470 Ω/1 kΩ calibration fails	AFE not active, saturation, poor contacts	Primary resistor map	Verify jumpers/range/switch/fixture	No milk data
Phase discontinuity	Wrap, SNR, settling	Adjacent-jump rule	Unwrap, increase settling, restrict band	Reject points
DMM accuracy insufficient	0.5%–1% handheld DMM	Cross-check on lab DMM	Use best available DMM; state limit	Limit metrology claim
Poor DI repeatability	Bubbles, contamination, motion	Repeated blank fills	Improve cleaning, fixed routing	Flag/repeat
Pure milk drift	Temperature, creaming, fouling	Repeated pure controls	Standardize timing/temp/clean	No adulteration
Electrode polarization dominates	Two-electrode cell, low frequency	Compare bands; review literature	Restrict to higher-frequency band	Constrain claim
DS18B20 instability	Pull-up, parasite, water ingress	Dual-probe cup compare	Replace probe	Flag temp data
Power/ground noise	Shared supply, long loops	CV vs wiring config	Short ground, powered hub, optional filter	Repeat calibration
Sample-path shielding	Long unshielded leads	Cable motion test	Short twisted pair, strain relief	Discard bad
Bubbles	Filling/mixing foam	Visual + spectrum jump	Gentle mix, tap, refill	Discard
Electrode fouling	Milk protein film	Blank after milk, visual	Cleaning SOP, detergent rinse	Discard sequence
Cell geometry drift	Loose slots, hand adjustment	Caliper, repeat same sample	Fix mechanical slots	No-go
Unconfirmed SS316L	Seller listing not verified	Invoice; magnet; saline soak	Documentation or mark as assumption	Limit claims
No reference instrument	No access to LCR	N/A	Borrow from IUB lab	Weakens paper
ML data leakage	Random split across day/brand	Grouped CV vs random split	Rebuild split protocol	Invalidate old metric

11.3 K.3 Symptom-to-cause troubleshooting table

Symptom	Likely cause	Test	Fix	Discard data?
Board not detected	Wrong wiring, address, power	I²C scan, rail DMM	Rewire, common GND, correct pull-ups	Yes

Symptom	Likely cause	Test	Fix	Discard data?
Sweep hangs	Firmware FSM or AD5933 STATUS stuck	Timeout log	Reset AD5933 via STANDBY 0xB0, add watchdog	Yes
Re/Im near constant	Wrong register read, no excitation, open path	Known resistor, raw log	Fix firmware/path	Yes
Values saturated	Too high signal, wrong range, low load	Sweep 1 kΩ, 470 Ω	Lower excitation/PGA, validate AFE	Yes
High noise at high freq	Lead parasitics, shielding	Cable motion test	Shorter leads, fixed routing	Usually
High noise at low freq	Electrode polarization, settling	Increase settling, compare bands	Restrict band	Affected band
Milk spectra shift over minutes	Temperature, creaming, fouling	Temp log, repeat same fill	Fixed timing/mixing/cleaning	Flag/repeat
DI blank looks like milk	Carryover and fouling	Repeat after cleaning	Detergent clean, inspect	Yes
Module B worse than Module A	Rework fault or AFE topology issue	DMM jumpers, resistor map	Inspect/rework or abandon B	Yes for B
Direct mode good only at 1 kΩ	AD5933 native range	Compare 330 Ω/470 Ω	Use Dual-AFE for milk	Direct not primary
ML accuracy unrealistically high	Data leakage by repeat/day/brand	Grouped CV vs random split	Rebuild split protocol	Yes, invalid
Electrolysis bubbles on electrode in milk	DC bias leaking through	DMM at P1/P2 under drive	Use Range 4; add series AC cap if needed	Yes

12 SECTION L — Required changes from previous blueprint

Frozen updates to the master blueprint (v3.1 → v4.0):

1. Both AD5933 modules confirmed Direct mode by DMM and visual inspection.
2. AD8606 is present but bypassed in the confirmed current Direct-mode sample path.
3. Module A remains Direct mode as `AD5933-A-DIRECT`.
4. Module B becomes `AD5933-B-DUAL-AFE` *after* Direct-mode sanity passes on both modules.
5. Any earlier claim that the boards probably shipped in Dual-op-amp mode is rejected.
6. Module SMA connectors are DDS-OUT and EXT-CLK, not the sample Vin/Vout path.
7. Bench-order rule: Direct-mode power/I^2C/1 kΩ sanity on BOTH modules BEFORE rework.
8. Open-jumper acceptance is "no beep, megaohm-scale," not "> 10 MΩ."
9. New **DC-bias gate** at P1/P2 is mandatory before any wet measurement.
10. New **parasitic-fixture characterization** (open/short/cable-motion/switch-contact) is mandatory before resistor characterization.
11. Default excitation **Range 4** for milk contact; Range 1 is forbidden for milk.
12. DMM model and accuracy class recorded in `hardware/dmm_inventory.csv`; metrology claim bounded by DMM accuracy.
13. Ferrite-bead spec: FBMH3225HM601NT, ≈ 600 Ω impedance at 100 MHz.
14. SS316L is the only publishable electrode material; 304 demoted to mockup.
15. Portable oscilloscope is not confirmed bought; optional backup only.
16. DS18B20 sample temperature is read before and after sweep only.
17. Cell geometry remains v1 candidate until repeatability gates pass; geometry fallback rule added if milk $|Z|$ is outside trusted window.
18. Manual CAL/SAMPLE switching frozen for v1.
19. Electrode-polarization warning added explicitly (Section 8.12).

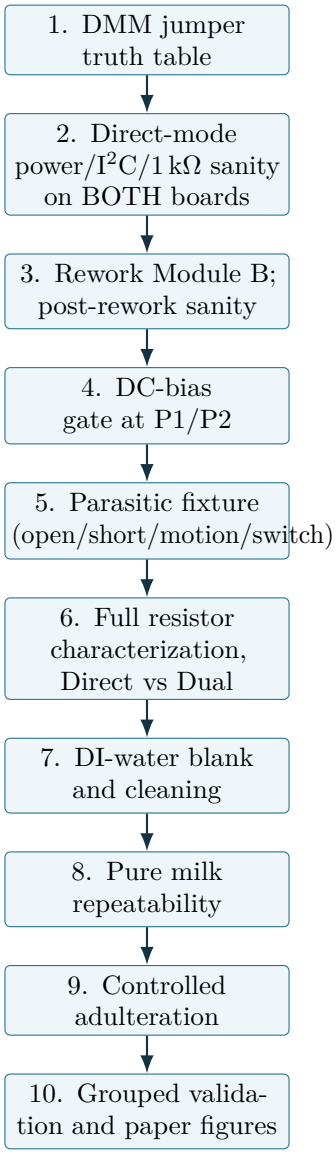

Figure 8: Experimental validation ladder (v4.0). Do not skip levels.

20. Phase calibration notation corrected: R_{DFT} / I_{DFT} for register values vs R_{cal} for known resistance; phase unwrap before features.
21. Settling cycles guidance added (start 15, escalate if first-point bias).
22. Grouped validation by day/session/source/cell mandatory.
23. Synthetic ML results are not evidence of physical performance.

Reviewer-risk warning

The most important correction from earlier drafts is that hardware-mode status is measured, not inferred. DMM continuity is the authority. And rework happens only after Direct-mode sanity confirms vendor delivery was good.

L.b v4.0 → v4.0b technical patches

The following patches were applied after a multi-source adjudication (datasheet, UG-364, Ibba 2021, two AI feedback rounds). Patches preserve the v4.0 architecture, BOM, cell, and firmware structure; they tighten the gates between Day-B0 sanity and first-liquid testing.

1. **DC-bias gate (Section 5.11) is now a three-measurement procedure** (G-DC3): $V_{DC}(P1-$

GND), $V_{DC}(P2-\text{GND})$, $V_{DC}(P1-P2)$. Primary pass on differential $|V(P1-P2)| < 50\,\text{mV}$ under both no-load and 470 Ω-loaded conditions, under active excitation. Absolute pad voltages retained as diagnostics for common-mode interpretation.

2. **AC-coupling fallback rule corrected:** minimum 10 µF, preferred 47 µF non-polar/film, placed in series with VOUT *upstream of the DPDT common terminal* so the cap is in both CAL and SAMPLE paths and is absorbed by the per-frequency gain factor. The 1 µF value previously suggested in v4.0 is rejected on the grounds that $X_C(1\,\text{kHz}) = 159\,\Omega$ is comparable to the load.

3. R_{FB} **inventory gate (G-RFB) added to F.4** (Section 6.4): DMM-measure between AD5933 Pin 4 and Pin 5 unpowered; log to `hardware/rfb_inventory.csv`. Decision tree on the measured value flags whether saturation is likely.

4. **Saturation gate G-SAT and amplitude-linearity gate G-LIN added to F.10**, addressing the inferable but unverified TIA/R_{FB} saturation risk for a milk-range load with an unknown clone-module R_{FB}. R_{FB} rework is conditional on G-SAT failure, not pre-emptive.

5. **Trusted-band initial candidate restricted to 5–100 kHz** (Section 8.5), per UG-364 [2] guidance on internal-MCLK spectral leakage below ∼5 kHz. Sub-5 kHz operation is permitted only after explicit resistor-QC validation; external 4 MHz MCLK is reclassified as an optional fallback.

6. **Range 4 rationale corrected (Section 8.6):** Range 4 minimizes AC excitation amplitude (linearity-friendly) but does *not* minimize the DC differential across the load when connected directly between VOUT and VIN. Differential is governed by $V_{DD}/2$ on VIN minus $V_{\text{VOUT,DC}}$. The previous v4.0 wording ("Range 4 minimizes electrolysis") is corrected.

7. **Signed int16 register parsing rule (Section 9.2.a):** firmware and pipeline must parse `0x94`/`0x95` and `0x96`/`0x97` as twos-complement 16-bit signed integers, with concrete C and Python examples. Temperature register (`0x92`/`0x93`) is 14-bit signed in 16-bit envelope.

8. **Quiescent-current rule relaxed** (Section 6.4): 15–25 mA is reference, not gate. Hard-fail conditions are explicit (thermal runaway, unstable rail, > 50% module mismatch, I^2C failure, visible/smell damage).

9. **Risk register (Section 11.2) extended** with five new rows: differential DC-bias, TIA/R_{FB} saturation, low-frequency DFT leakage, AC-cap calibration leak, unsigned register parsing.

10. **Synthetic Cole–Cole simulation reclassified** as software scaffolding only; no paper figure/metric is sourced from it. (No structural rewrite of the pipeline; only a hygiene rule.)

The patches do *not* require new components, a different cell, or a different ESP32 firmware architecture. The largest operational impact is the trusted-band ceiling at 5 kHz, which simplifies the initial F.10 sweep and protects the publication argument from spectral-leakage attacks.

L.c v4.0b → v4.0c procedural patches

v4.0c is a small procedural revision following an external review. It adds no new gates and no new components.

1. **G-SAT and G-LIN clarified as analyses on the F.10 dataset (Sections 6.10.a, 6.10.b):** both gates are computed from sweeps already collected in F.10 plus, in G-LIN's case, one additional Range-2 470 Ω sweep and its accompanying Range-2 1 kΩ anchor. They are not separate sweep sessions. This wording change removes the risk of redundant data acquisition.

2. **G-RFB SSOP-probing safety caution (Section 6.4):** a slipped DMM probe on the AD5933 SSOP package can short adjacent pins. If safe probing cannot be achieved, G-RFB may be skipped; G-SAT will resolve the saturation question empirically. A skipped G-RFB is acceptable; a damaged module is not.

3. **Lab-DMM cross-check promoted to a pre-G-SAT gate (G-DMMx, Section 6.7):** the gain factor is anchored on `R1k_01` and validated against 1 kΩ/470 Ω/330 Ω, so any handheld-DMM error in those measurements propagates through every calibrated $|Z|$ figure. Cross-check on a benchtop lab

DMM before the F.10 resistor characterization. If no lab DMM is available, the gate is skipped and the metrology claim in the paper is bounded by the handheld's accuracy class.

4. **JSONL example brought into line with the v4.0b default (Section 9.4):** `start_hz` updated to 5000 Hz, `points` to 96. Sub-5 kHz exploratory sweeps must be tagged as such (`LFEXPLORATORY`) so downstream QC separates them from publication-band data.

13 SECTION M — Final action plan

13.1 M.1 Next 24 hours (v4.0c)

1. Label modules: `AD5933-A-DIRECT` and `AD5933-B-DIRECT-PRE-REWORK`.
2. Photograph both modules (top, bottom, shield, jumpers, Vin/Vout, I^2C header) at macro.
3. Create `hardware/jumper_state.csv`, `dmm_inventory.csv`, `rfb_inventory.csv`, `dc_bias_check.csv`.
4. Re-verify all six jumpers on both modules with DMM; log.
5. Log DMM model and accuracy class in `dmm_inventory.csv`.
6. **G-RFB (new):** DMM-measure R_{FB} between AD5933 Pin 4 and Pin 5 on each module, IC unpowered; log to `rfb_inventory.csv`. Apply the decision tree in Section 6.4.
7. Power-test Module A alone: +5 V input, measure +3.3 V rail, check heat/current (reference 15–25 mA; hard-fail criteria per F.4).
8. Power-test Module B alone (same).
9. Connect ESP32 to Module A (GND first; SDA/SCL with 3.3 V pull-ups only). Run I^2C scanner; confirm `0x0D`; read STATUS and internal temp 100× *using signed int16 parsing per Section 9.2.a.*
10. Repeat step 9 on Module B.
11. Single-point sweep at 10 kHz, Range 4, PGA ×1, 15 settling cycles on 1 kΩ resistor, both modules in Direct mode. Confirm signed Re/Im values are finite and not at ±32767.
12. **Only if all above pass**, prepare rework tools and rework Module B per Section 5.
13. Post-rework DMM truth table on Module B.
14. Post-rework repeat of steps 9–11 on Module B.
15. **G-DC3 three-measurement DC-bias gate** (Section 5.11) on both modules: log $V_{DC}(P1-\text{GND})$, $V_{DC}(P2-\text{GND})$, $V_{DC}(P1-P2)$ under no-load and 470 Ω loaded, at Range 4. Pass on $|V(P1-P2)| < 50\,\text{mV}$.
16. Do not connect milk, water, or cell yet.

13.2 M.2 Next 3 days (v4.0c)

1. Implement minimal resistor sweep firmware (JSONL output) with **signed int16 register parsing** per Section 9.2.a. Add a unit test using a capacitive load (1 Ω kΩ + 47 nF) where some imag values must be negative.
2. Laptop ingestion script and raw CSV writer; range-validate signed integers $[-32768, 32767]$ on every record. Default sweep parameters 5–100 kHz, 96 points, Range 4 (per the v4.0c JSONL example in Section 9.4).
3. DMM-measure and label all 60 calibration resistors.
4. **G-DMMx (v4.0c):** cross-check `R1k_01`, `R470_01`, `R330_01` on the best available IUB lab DMM (per Section 6.7). Log to `resistor_inventory.csv`.

5. Build clean resistor CAL fixture on perfboard with DPDT.
6. Parasitic-fixture suite (open/short/motion/switch).
7. Begin full resistor characterization at the v4.0c default sweep parameters (5–100 kHz, Range 4): 1 kΩ first, then 470 Ω, 330 Ω.
8. Apply G-SAT and G-LIN *analyses* to the resistor-sweep dataset (no separate sweep sessions). Decide whether R_{FB} rework or external buffer is needed.
9. Compare Module A Direct and Module B Dual-AFE on primary resistors.
10. Send advisor email requesting EVAL-AD5933EBZ or reference-LCR loan.

13.3 M.3 Next 7 days (v4.0c)

1. Complete full resistor characterization across all six values on both modules in the trusted band 5–100 kHz.
2. Optionally extend to 1–5 kHz if and only if G-SAT/G-LIN both pass at the band edge; explicitly annotate sub-5 kHz points in the plot.
3. Generate Direct-vs-Dual plots; write the trusted-band selection report including G-SAT/G-LIN evidence.
4. Validate DS18B20 probes (ice-water + room-temp cup compare); assign and log ROM IDs.
5. Design v1 Fusion 360 cell with parameterized electrode geometry.
6. Print first cell body prototype (PETG) in IUB FabLab.
7. Dry-fit assembly using 304 offcut for mechanical check only.
8. Laptop calibration/QC notebook scaffolding.

13.4 M.4 Next 30 days

1. Receive SS316L; document material; cut final electrodes; soak-test in saline for authenticity.
2. Fabricate three identical cells.
3. DI-water blank and cleaning/carryover tests.
4. Pure milk within-session, refill, cross-session, cell-to-cell repeatability.
5. Only after pure milk passes, begin water-dilution adulteration series.
6. Day-grouped validation from first real dataset.
7. Prepare paper figures alongside data: architecture, jumper truth table, DC-bias evidence, resistor validation, trusted band, cell schematic, pure milk repeatability, Direct-vs-Dual comparison.
8. Pre-registration document committed to git before blind-sample decoding.
9. Reference-instrument cross-check on a subset if borrow succeeds.

Executive verdict

The next real milestone is not an ML accuracy number. It is this: both modules pass Direct-mode sanity, Module B is reworked and still passes sanity, the DC-bias gate passes, and Module B in Dual-op-amp mode measures 330 Ω, 470 Ω, and 1 kΩ repeatably in a documented trusted frequency band. Only then does the milk repeatability work begin. Only after pure milk repeatability does the adulteration study begin.

Open items requiring bench clarification or further research

The following items are not resolved in this document and are flagged for bench or supervisor resolution:

1. **R_{FB} value on the Chinese AD5933 modules (G-RFB, NEW v4.0b).** Vendor schematic is unpublished. Will be settled by the Day-B0 DMM measurement between Pin 4 and Pin 5 on each module, before powering. Determines whether R_{FB} rework or external buffer is required for milk-impedance measurements.
2. **DC-bias gate outcome (G-DC3).** Whether the module's Direct-mode path contains an AC-coupling capacitor between AD5933 VOUT and P2 is unknown from photographs alone. The three-measurement Day-B0 DMM gate ($P1-$GND, $P2-$GND, $P1-P2$, no-load and 470 Ω-loaded) settles it.
3. **Saturation behavior across the resistor set (G-SAT).** Will be characterized by the resistor sweep at 5–100 kHz on both modules; clipping fingerprint is 330 Ω/470 Ω reading systematically high.
4. **Amplitude-linearity behavior (G-LIN).** Range-2 vs Range-4 470 Ω agreement.
5. **AD8606 exact topology in Dual-op-amp mode.** The vendor does not publish the schematic. Gain values and TIA feedback must be characterized empirically via the resistor set on Module B.
6. **SS316L authenticity.** Chinese order ETA 1–2 weeks; confirm via invoice wording plus magnet test plus 0.9% saline 24-hour soak.
7. **DMM accuracy class.** Log the actual meter's basic accuracy and note in the paper; if worse than 0.5%, a cross-check on an IUB lab DMM is strongly recommended before publication.
8. **Reference-instrument loan.** Request to Dr. Feroz Ahmed for EVAL-AD5933EBZ or benchtop LCR. This is the single highest-leverage item for indexed-conference publication strength.
9. **Milk impedance actual value.** The v1 candidate cell geometry is designed for 200–700 Ω expected milk impedance based on literature; the real value depends on brand, fat, temperature, and our specific cell constant. First pure-milk test answers this; geometry fallback rule (Section 7.3) applies if the value lands outside the trusted band.
10. **Electrode polarization crossover frequency.** Typical two-electrode SS polarization dominates below ≈ 1 kHz but the exact crossover for this cell must be measured. The trusted band will exclude the polarization-dominated region.
11. **Sub-5 kHz operability.** Open until the resistor characterization tells us whether per-frequency calibration absorbs the internal-MCLK leakage well enough at 1–5 kHz, or whether the optional 4 MHz external MCLK must be added.
12. **Settling-cycles optimum.** Start at 15; will be tuned per module empirically during GATE F.10.
13. **Blind-sample protocol.** Requires coordination with Mahin or Rafi; pre-registration document drafted before decoding.

References

[1] Analog Devices, *AD5933: 1 MSPS, 12-Bit Impedance Converter, Network Analyzer*, Rev. F, data sheet (project-uploaded).

[2] Analog Devices, *UG-364: Evaluating the AD5933 1 MSPS, 12-Bit Impedance Converter Network Analyzer*, evaluation-board user guide (project-uploaded).

[3] Vendor module document, *AD5933 Impedance Converter Network Analyzer Module User Manual* (project-uploaded). **Use with caution:** pages 1–5 (mode configuration, jumper logic, I^2C addressing, basic register-init sequence) are usable as starter reference; pages 8–9 (marketing copy claiming 10 Hz–1 MHz sweep, SPI support, anecdotal lab stories) contradict the official data sheet and are disqualified for this project.

[4] EISight, *AURA Phase 2 Project Progress Report*, project-uploaded progress report.

[5] EISight project record, Taobao purchase audit and uploaded order screenshots.

[6] EISight, `eisight_pipeline.py`, project-uploaded source file.

[7] EISight hardware update, DMM continuity measurements on both modules (2026-04-24) and uploaded board photographs. Source of truth for jumper state and Direct-mode confirmation.

[8] P. Ibba *et al.*, "Design and Validation of a Portable AD5933–Based Impedance Analyzer for Smart Agriculture," *IEEE Access*, vol. 4, 2021. Reference architecture for AD5933 + AD8606 AFE with selectable R_{FB}.

[9] M. Ashoorirad *et al.*, "Bioimpedance sensor to detect water content in milk based on van der Pauw," *IET Nanobiotechnology*, 2021. Reference for milk characteristic frequency ($\approx$ 23–46 kHz) and water-dilution linear trend.