Food Chemistry 385 (2022) 132678

Contents lists available at ScienceDirect

Food Chemistry

journal homepage: www.elsevier.com/locate/foodchem

Identifying adulteration of raw bovine milk with urea through electrochemical impedance spectroscopy coupled with chemometric techniques

Taiz Alana Minetto [a], Beatriz Denardi França [a], Gabriel da Silva Dariz [a], Emiliano Amarante Veiga [b], Alessandro Cazonatto Galvão [a], Weber da Silva Robazza [a,*]

[a] Laboratory ApTher - Applied Thermophysics, Department of Food and Chemical Engineering, Santa Catarina State University (UDESC), Pinhalzinho, SC, Brazil
[b] Bionexus Technology LLC, Chapecó, SC, Brazil

ARTICLE INFO

Keywords:
Milk analysis
Milk adulteration detection
Chemometrics
Electrochemical impedance spectroscopy

ABSTRACT

This study aimed to evaluate the applicability of electrochemical impedance spectroscopy to identify raw bovine milk adulteration with urea. Three batches of raw milk adulterated with urea were studied. Hierarchical clustering indicated that the samples could be split in three groups corresponding to low adulteration (less than 7 wt %), medium adulteration (between 8 and 16 wt%) and high adulteration (over than 16 wt%). A linear discriminant analysis was performed resulting in 90% of accuracy in classifying between groups. Besides, a partial least squares model containing three directions provided good accuracy in quantitatively predicting the urea mass fraction added to raw bovine milk. Finally, calculations using an approximated electric circuit model suggested the formation of urea aggregates that hinder charge transportation within the milk thus diminishing the solution conductivity. Results indicate that electrochemical impedance spectroscopy can be a useful, low cost and rapid tool to identify milk adulteration with urea.

1. Introduction

Dairy are highly nutritive food products and essential sources of proteins, vitamins, fatty acids, and minerals. The consumption of milk and dairy products is associated with a healthy diet (Chalupa-Krebzdak, Long, & Bohrer, 2018). Bovine milk is the most consumed milk by humans (Pham et al., 2020). It is composed mainly of water (87%), protein (3%), fat (3%), minerals (0.8%), and vitamins (0.1%) (Pereira, 2014). The milk constituents can vary depending on several factors, including animal genetics, lactation stage, and environmental conditions (Jenkins & McGuire, 2006).

Global milk production has steadily increased in the past few years. The world production levels have reached over 900 million tons in 2020 (Rosenberg, 2021). Due to their economic importance, milk products are prone to be adulterated by adding different compounds, such as starch, hydrogen peroxide, formaldehyde, and urea. In this respect, several cases of milk adulteration have been reported in several countries. Milk and dairy products were the second main food ingredients involved in frauds and adulterations worldwide from 1980 to 2010, corresponding to 14% of the incidents reported (Handford, Campbell, & Elliott, 2016). In addition to economic losses, milk adulteration can cause severe problems to human health like heart attack and cancer.

Urea is intentionally added to milk to increase the total nitrogen content to mask its adulteration with water (Kahn, Krishna, Majumder, & Gupta, 2015). The consumption of milk adulterated with high urea levels can cause ulcers, cancers, and malfunctioning of the kidneys in humans (Toledo, Toci, Pezza, & Pezza, 2017). Besides, the addition of urea alters some physicochemical properties of raw milk, like the total solids content and moisture (Ahirwar, Harilal, Srihari, & Pandey, 2014).

Electrochemical Impedance Spectroscopy (EIS) is a long-standing fast and non-destructive electrochemical technique that has been only recently applied to characterize food products. In brief, it consists of applying an alternating current or voltage signal at different frequencies followed by the measurement of the response impedance as a function of the frequency. Some applications of the principles of EIS to food products include the characterization of beverages (Soares, Machado, Lopes, Vieira, & Delerue-Matos, 2020), the characterization of milk (Lopes, Machado, Ramalho, & Silva, 2018), the determination of honey local

* Corresponding author.
E-mail address: weber.robazzi@udesc.br (W. da Silva Robazza).

https://doi.org/10.1016/j.foodchem.2022.132678
Received 21 October 2021; Received in revised form 7 March 2022; Accepted 8 March 2022
Available online 10 March 2022
0308-8146/© 2022 Elsevier Ltd. This article is made available under the Elsevier license (http://www.elsevier.com/open-access/userlicense/1.0/).

origin (Pazskowski, Wilczek, Szyptowska, Nakonieczna, & Skierucha, 2014), the evaluation of olive oil acidity (Grossi, Di Lecce, Toschi, & Riccò, 2014), the identification of bovine milk fat (Veiga & Bertemes-Filho, 2012), and the control of ice cream freezing (Grossi, Lazzarini, Lanzoni, & Riccò, 2011). So far, although a few studies report the application of electric sensors to evaluate milk adulteration (Bueno, Araujo, Salles, Kussuda, & Paixão, 2014), EIS application to uncover milk adulterants in different food products has not been appropriately assessed. However, since the electrical properties of milk change with the addition of adulterants, this methodology has the potential to adequately describe milk adulteration.

Therefore, this study aimed to evaluate the application of EIS to identify the intentional addition of urea to raw bovine milk. The limit of identification of the technique was quantitatively assessed through the usage of the chemometric methods: Hierarchical Clustering on Principal Components (HCPC) and Linear Discriminant Analysis (LDA). Finally, an equivalent electric circuit that mimics the electrical properties of the system composed of electrode, milk, and urea was employed to provide insights into the molecular behavior of the adulterated milk.

2. Materials and methods

2.1. Samples preparation

Raw bovine milk was obtained from a milk processing industry. Samples were collected in three different batches between October 2019 and August 2020. After arriving in the industry plant, the samples were immediately transported to the Laboratory ApTher (Applied Thermophysics) of Santa Catarina State University and kept refrigerated at 4 °C. The following mass fractions of analytical grade urea (Sigma Aldrich) were added to raw bovine milk (wt%) for the first batch: 0 (control), 1, 2, 3, 4, 6, 9, 12, 16, 25, and 31. The mass fractions of the samples collected for the other two batches were: 0 (control), 0.5, 1, 2, 5, 7, 10, 13, 16, 20, and 25. Therefore, 11 different treatments were used in the current study for each of the samples collected with mass fractions of urea ranging between 0 and 31 wt%.

2.2. EIS measurements

The EIS device (Model Leitexpec FS315, Bionexus Technology LLC, Brazil) consisted of a 50 mL electrode cell in which 30 mL raw bovine milk samples were placed at room temperature (25 °C). The system was composed by a tetrapolar impedance probe working from copper electrodes, where a pair applied the current signal and the other pair was used to conduct the impedance measurements. The electrical impedance was evaluated at 28 different discrete frequencies points ranging from 0.1 kHz to 852 kHz. All the measurements were repeated 5 times. To evaluate the accuracy of the measurements, intra and inter day repeatability were calculated and expressed as the relative standard deviations (RSD).

2.3. Equivalent electrical circuit

The concept of equivalent electrical circuit is widely used in the field of EIS. It assumes that the electrical properties of the measured sample and the electrode can be described by a combination of elementary circuit components like resistors and capacitors or more complicated components like constant-phase elements (CPE) (Ciucci, 2019). In the current study, an equivalent circuit previously used to describe water-sucrose solutions adulterated with sodium carbonate was employed to describe the raw bovine milk adulteration with urea (Chakraborty, Das, Bera, Chattopadhyay Karmakar, & Chattopadhyay, 2017). Fig. 1 exhibits the equivalent circuit representation adopted in this study. The two capacitors (C_{dl}) describe the double layer which is formed between the electrodes and the sample studied. The other components R_{sol} and C_{sol} account for the resistance and the capacitance of the sample due to

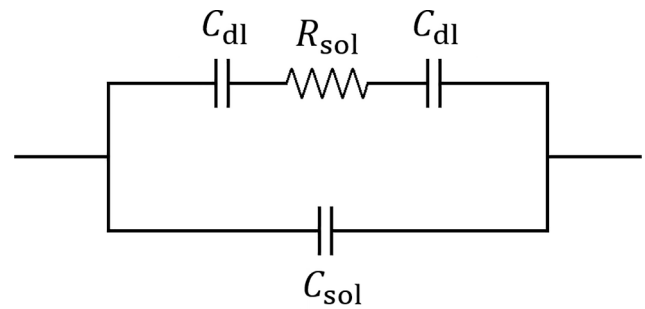

Fig. 1. Equivalent circuit representation of the system studied.

the dielectric nature of the liquid solution. It can be shown that the absolute value of the resulting impedance of the equivalent circuit shown in Fig. 1 as a function of the frequency (f) and of its capacitances and resistance is given by:.

$$|Z(f)| = \frac{1}{2\pi f C_{sol}} \sqrt{\frac{(\pi f R_{sol})^2 + \frac{1}{(C_{dl})^2}}{(\pi f R_{sol})^2 + \left(\frac{1}{C_{dl}} + \frac{1}{2C_{sol}}\right)^2}} \tag{1}$$

The Complex-Impedance Plane representation, or Nyquist plot, in which the data from each frequency point is plotted as the negative of the imaginary part on the ordinate and the real part on the abscissa was obtained. This diagram is a useful tool to provide visual information about the samples studied. The real (Z_{Re}) and imaginary (Z_{Im}) components of the resulting impedance are given by Eqs. (2) and (3), respectively.

$$Z_{Re}(f) = \frac{R_{sol} C_{dl}[2C_{sol}(1 - \pi f) + C_{dl}]}{(2\pi f C_{sol} R_{sol} C_{dl})^2 + (2C_{sol} + C_{dl})^2} \tag{2}$$

$$Z_{Im}(f) = \frac{-2\pi f C_{sol}(R_{sol} C_{dl})^2 - (2C_{sol} + C_{dl})}{(2\pi f C_{sol} R_{sol} C_{dl})^2 + (2C_{sol} + C_{dl})^2} \tag{3}$$

Nonlinear regression analysis was conducted with the software R (R Core Team, 2019) through the package minpack.lm which uses the Levenberg-Marquardt algorithm to estimate the parameters of the model (Elzhov, Mullen, Spiess, & Bolker, 2016).

2.4. Dependence of the fitted parameters on the urea concentration

To evaluate the influence of the urea concentration on the fitted parameters of the equivalent circuit, linear mixed-effects models (LME), as described by Eq. (4), were fitted to the whole set of data. In Eq. (4), the term Y represents the response, β_0 and β_1 are the regression coefficients, [Urea] represents the value of the urea mass fraction, and ε corresponds to the residual error associated to the model prediction.

$$Y = \beta_0 + \beta_1[\text{Urea}] + \varepsilon \tag{4}$$

In addition, because the electrical conductivity is proportional to the reciprocal of the resistance, the following empirical equation was adapted from the literature (Lawton & Pethig, 1993) and applied to describe the dependence of the equivalent resistance, R_{sol}, on the urea mass fraction (ϕ). The parameter R_0 correspond to the resistance (Ω) of the sample without urea and γ in Eq. (5) is an empirical parameter without biological meaning.

$$R_{sol} = R_0(1 - \phi)^{-\gamma}\left(1 + 0.3\phi^2\right)^{-\gamma} \tag{5}$$

The linear mixed-effects models were fitted with the R package lme4 (Bates, Maechler, Bolker, & Walker, 2015) and the nonlinear mixed-effects model was fitted through the R package saemix (Comets, Lavenn, & Lavielle, 2017). The goodness of fit for both the linear and nonlinear mixed-effects models were evaluated with the coefficient of

determination (R^2), the root mean square error (RMSE), and the mean relative percentage error (MRPE), given by Eqs. (6) to (8), respectively. In these equations, N corresponds to the number of experimental observations, $Y_{pred,i}$ is the ith prediction of the variable Y, $Y_{obs,i}$ is its ith experimental value, and $\overline{Y}$ represents the mean value of Y.

$$R^2 = \frac{\sum_{i=1}^{N}\left(Y_{pred,i} - Y_{obs,i}\right)^2}{\sum_{i=1}^{N}\left(\overline{Y} - Y_{obs,i}\right)^2} \tag{6}$$

$$RMSE = \sqrt{\frac{\sum_{i=1}^{N}\left(Y_{pred,i} - Y_{obs,i}\right)^2}{N}} \tag{7}$$

$$MRPE = \frac{100}{N}\sum_{i=1}^{N}\left|\frac{Y_{pred,i} - Y_{obs,i}}{Y_{obs,i}}\right| \tag{8}$$

2.5. Hierarchical clustering on principal components

Unlike other clustering methods such as K-Nearest Neighbors (KNN), hierarchical clustering establishes the number of clusters by using more objective criteria. Through this technique, a dissimilarity measure such as the Euclidean distance is used to build a dendrogram, which is a tree-based representation of each observation. To interpret the dendrogram correctly, it must be noted that the observations that fuse close to the bottom of the tree are very similar whereas observations that fuse close to the top are very dissimilar (James, Witten, Hastie, & Tibshirani, 2021). The HCPC consists in the use of principal component analysis (PCA), previous to the hierarchical clustering aiming to reduce the dimension and noise of the data and consequently resulting in a more stable clustering.

In the current study, three groups (batches) comprising 28 observations corresponding to the impedance results as functions of the frequency of the alternate current applied were utilized for each treatment. Analysis of these groups was conducted to establish the number of clusters. To attain this objective, principal component analysis was applied to the observations of each group and a dendrogram was built defining the total number of clusters corresponding to the 11 treatments. These analyses were performed with the R packages FactoMineR (Le, Josse, & Husson, 2008) and factoextra (Kassambara & Mundt, 2020).

2.6. Linear discriminant analysis

Linear Discriminant Analysis is other classification algorithm that was employed in this study. Through LDA, the Bayes decision boundary that classifies the treatments into clusters is estimated by assuming that the conditional probability of a random chosen observation belongs to a given class is Gaussian leading to a discriminant function which is linear in relation to the observations (James, Witten, Hastie, & Tibshirani, 2021).

The LDA model developed in this study was validated through two different approaches: the first consisted in randomly selecting 60% of the total 33 treatments (11 treatments for batch) to train the model and using the remaining datasets to test the model. The other approach consisted in the leave-one-out cross-validation approach. In brief, this technique involves splitting the data points into a training set constituted by all except one observation which is used to validate the model. This procedure is repeated for all data points. To check the accuracy obtained after the two approaches of validation, a confusion matrix was calculated that determined the number of observations correctly or incorrectly classified. Linear discriminant analysis was conducted with the function lda of the R library MASS.

2.7. Partial least squares regression (PLSR)

Partial least squares regression models were performed to quantitatively evaluate the urea concentration added to the raw bovine milk samples. The number of partial least squares directions (M) used was selected through 10-fold cross-validation for each different value of M using the RMSEP (root mean square errors of prediction) as minimum criteria. This analysis was conducted with the R package pls (Mevik, Wehrens, & Liland, 2019).

3. Results and discussion

3.1. Impedance spectra

Fig. S1 (see supplementary file) exhibits the spectra containing the impedance results obtained as functions of the logarithm of the 28 discrete frequencies of the applied alternating current signal. Overall, it can be observed that the main difference between the treatments occurs at low frequencies (below 10^5 Hertz), in α and β regions (Grimnes & Martinsen, 2015). This behavior suggests that the main difference between the spectra can be ascribed to the double layer formed in the interface samples-electrodes (low frequencies) and to the resistive part (mid frequencies) (Das et al., 2017). The patterns observed for spectra corresponding to the raw bovine milk samples collected for the different batches changed reflecting the seasonal variation in raw bovine milk composition (Chen, Lewis, & Grandison, 2014).

3.2. Fit of the equivalent circuit model

Table 1 displays the values of the parameters obtained after fit of Eq. (1) to experimental results of the impedance. The value of the double

Table 1
Parameters obtained after fit of Eq. (1) to experimental data. Results are expressed as estimated value (standard error).

Urea [a]	Batch 1		Batch 2		Batch 3	
	R_{sol} [b]	C_{sol} [c]	R_{sol} [b]	C_{sol} [c]	R_{sol} [b]	C_{sol} [c]
0.0%	107.0 (0.87)	5.63 (0.26)	118.8 (1.09)	5.85 (0.30)	138.1 (2.25)	5.94 (0.53)
0.5%	–	–	127.1 (1.23)	5.81 (0.31)	117.4 (0.82)	5.56 (0.22)
1.0%	107.5 (0.83)	5.49 (0.25)	114.7 (0.65)	6.22 (0.20)	123.9 (0.57)	5.90 (0.15)
2.0%	106.7 (0.96)	5.59 (0.29)	113.8 (0.54)	6.04 (0.16)	125.3 (0.59)	5.84 (0.15)
3.0%	111.4 (1.07)	5.35 (0.30)	–	–	–	–
4.0%	111.0 (0.88)	5.65 (0.26)	–	–	–	–
5.0%	–	–	126.1 (2.52)	7.32 (0.79)	119.5 (0.56)	6.07 (0.16)
6.0%	114.2 (0.90)	5.35 (0.24)	–	–	–	–
7.0%	–	–	121.8 (1.03)	6.29 (0.29)	126.0 (0.61)	5.64 (0.15)
9.0%	119.0 (0.70)	5.40 (0.18)	–	–	–	–
10.0%	–	–	137.1 (0.59)	5.99 (0.14)	135.5 (0.59)	6.43 (0.15)
12.0%	125.3 (0.86)	5.59 (0.22)	–	–	–	–
13.0%	–	–	138.0 (0.62)	6.75 (0.16)	140.7 (0.70)	6.31 (0.17)
16.0%	128.0 (0.72)	5.56 (0.18)	148.0 (0.66)	6.01 (0.15)	142.8 (0.64)	5.80 (0.14)
20.0%	–	–	147.3 (0.64)	6.52 (0.15)	150.1 (0.73)	7.23 (0.19)
25.0%	143.9 (1.01)	5.50 (0.21)	147.8 (0.70)	7.33 (0.18)	172.1 (0.67)	6.45 (0.13)
31.0%	151.7 (0.96)	5.71 (0.20)	–	–	–	–

[a] expressed in wt%.
[b] expressed in Ω.
[c] expressed in pF.

layer capacitance (C_{dl}) parameter was empirically set as 0.1 nF as a constraint of the fitting procedure. Fig. 2 presents the Nyquist plots for the three batches. From the Nyquist diagrams, one can see an apparent difference between the samples, mainly for higher values of the real component of the impedance. It can be visualized that for batches 1 and 2, the samples adulterated with over than approximately 7% weight can be distinguished from the control. However, a clear-cut pattern between the control and the adulterated samples was not observed for batch 3.

Fig. 3 and Table 2 display the results obtained after the fit of the mixed effects models for the parameters R_{sol} and C_{sol} as a function of the mass fraction of urea added to the raw milk. From analysis of Fig. 3, it can be concluded that the parameter R_{sol} increases with the concentration of added urea, suggesting that it can be used to quantitatively evaluate the amount of urea added to the raw bovine milk samples. According to the results obtained after fit of the LME shown in Table 2, a 1% increase in the urea fraction causes an increase of 1.51 Ω in the equivalent resistance. Similarly to this study, a linear behavior was obtained for the relationship between the dielectric constant and the fat content in bovine milk (Zhu, Guo, & Liang, 2015). In this respect, this increase of the equivalent resistance can be ascribed to a deterioration in the charge transport within the sample due to the addition of adulterant (Durante, Becari, Lima, & Peres, 2016). As a matter of fact, it has been previously demonstrated that the addition of urea in water leads to the formation of dimers and higher aggregates (clusters) when the urea concentration increases (Jung, Czarnik-Matusewicz, & Bin Kim, 2004; Mafy, Afrin, Rahman, Mollah, & Susan, 2015). As raw bovine milk is mainly constituted by water, it is expected a similar behavior after the addition of urea to raw milk samples. These urea aggregates difficult the motion of the ions that are most responsible for the electrical conductivity of the milk. This hypothesis is reinforced due to the good accuracy obtained after the fit of Eq. (5) (although not as good as the LME model) to the data of the resistance as a function of the urea mass fraction. This model was originally proposed to express the conductivity of milk as a function of the fat content and provided good results in the current study if the fat content is replaced by urea mass fraction.

In what concerns the relationship between the parameter C_{sol} and the adulterant concentration, it increased in a way slightly linearly with the urea mass fraction and from a practical standpoint, it can be assumed as constant throughout the range of adulterant added to the raw bovine milk.

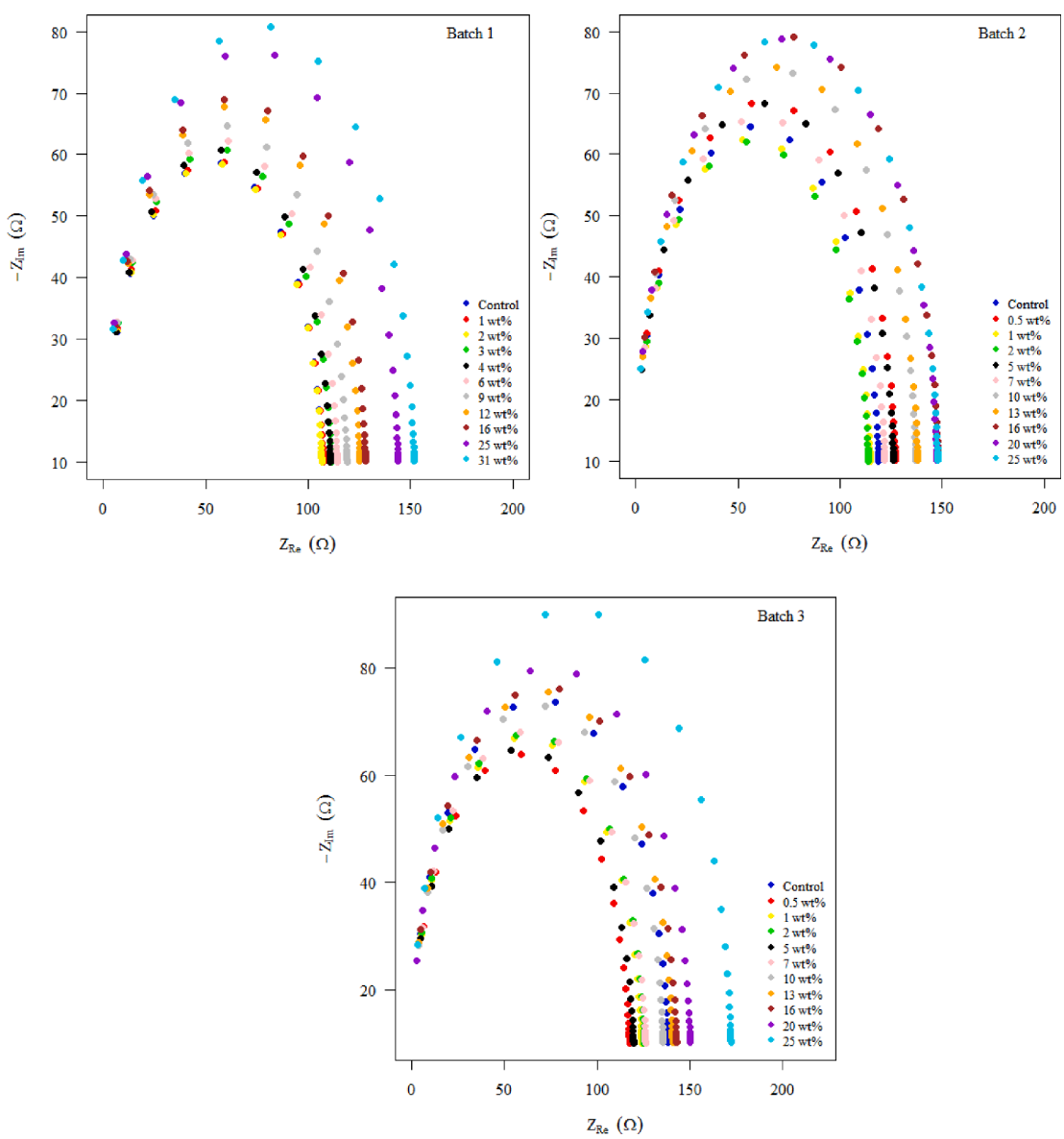

Fig. 2. Nyquist diagrams obtained for the three batches.

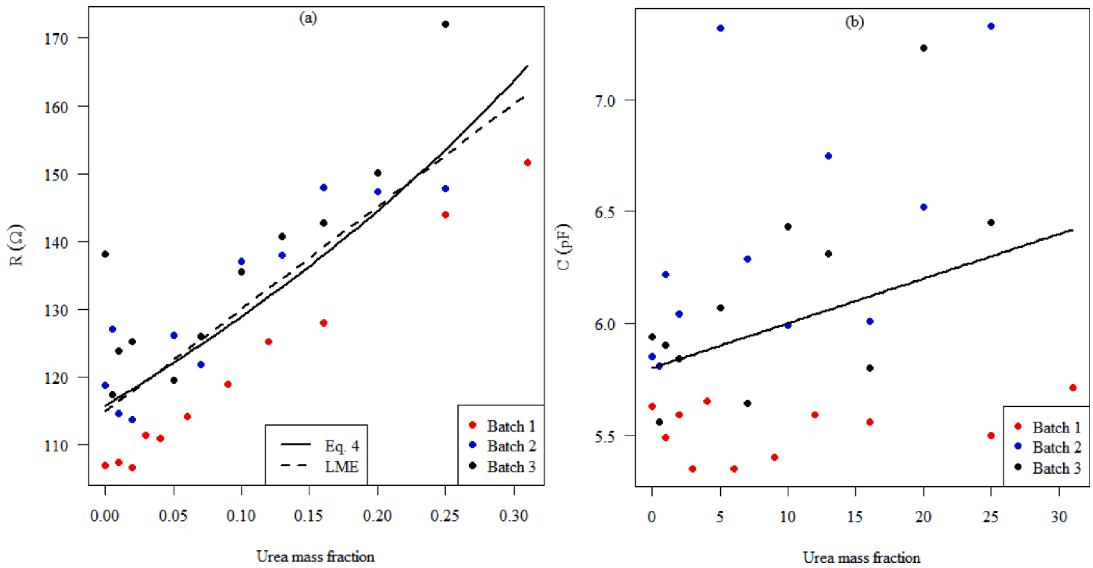

Fig. 3. Plots of the mixed-effects models obtained for the parameters (a) R_{sol} and (b) C_{sol} as a function of the urea mass fraction.

Table 2
Summary of the results obtained after the fit of linear and nonlinear mixed-effects models for the values of the parameters R_{sol} and C_{sol} as a function of the urea concentration.

Parameters	LME (R_{sol})	Eq. (4) (R_{sol})	LME (C_{sol})
β_0*	114.91 (4.98) (Ω)	–	5.80 (0.27) (pF)
β_1**	151.14 (11.23) (Ω)	–	2.23 (0.75) (pF)
R_0	–	115.83 (3.79) (Ω)	–
γ	–	1.05 (0.08)	–
R^2	0.87	0.84	0.51
RMSE	4.21×10^{-14} (Ω)	0.14 (Ω)	4.02×10^{-15} (pF)
MRPE	2.70 (Ω)	2.88 (Ω)	4.22 (pF)

* intercept of the linear model.
** coefficient of the urea mass fraction term.

3.3. Hierarchical clustering on principal components

To establish the more appropriate number of clusters that can be used to classify the groups, hierarchical clustering on principal components was applied to the experimental results. After conducting the principal component analysis to the spectra data, dendrograms were separately computed for each batch. Results (not shown) suggested that for the first and third batches, the most appropriate number of clusters to classify the eleven treatments was 3, whereas for the second batch, the results are better described by 6 clusters. Therefore, the more parsimonious choice for the number of clusters to group the data was equal to 3 clusters. In what follows, the clusters were labeled as "low adulteration", corresponding to samples adulterated with 0 to 7 wt% of urea, "medium adulteration" representing samples adulterated with 8 to 16 wt% of urea and "high adulteration", including samples adulterated with over than 16 wt% of urea.

3.4. Linear discriminant analysis

By using the three classes previously defined as: "low adulteration", "medium adulteration", and "high adulteration", linear discriminant analysis (LDA) was conducted. The results obtained for the LDA model are expressed in the confusion matrices shown in the supplementary file (Fig. S2 using 60% of the data as a training set and Fig. S3 using leave-one-out cross-validation). According to Fig. S2, the model correctly classified 10 out of 13 observations (76.92%) and as shown in Fig. S3, the model correctly classified 30 out of 33 observations (90.91%) through the leave-one-out cross-validation approach. These preliminary results indicate that the model developed can provide accurate classifications of raw bovine milk adulteration with up to 7 wt% of urea. Fig. 4 displays the resulting LDA scores separately for each group as histograms. A clear distinction between the class "high adulteration" and the other classes can be visualized in Fig. 4, whereas the classes labeled as "medium and low adulteration" are more similar. Linear discriminant analysis has also been successfully applied to distinguish between Emmental cheeses in terms of their thermo-physical properties (Hartmann, Samudrala, Hofmann, Schieberle, Hitzmann, & Hinrichs, 2015). Besides, through the combination between laser-induced fluorescence spectroscopy and LDA, it was possible to discriminate between adulterated samples of extra-virgin olive oil at low concentrations (Li, Chen, Chen, Guo, Li, & Xu, 2020).

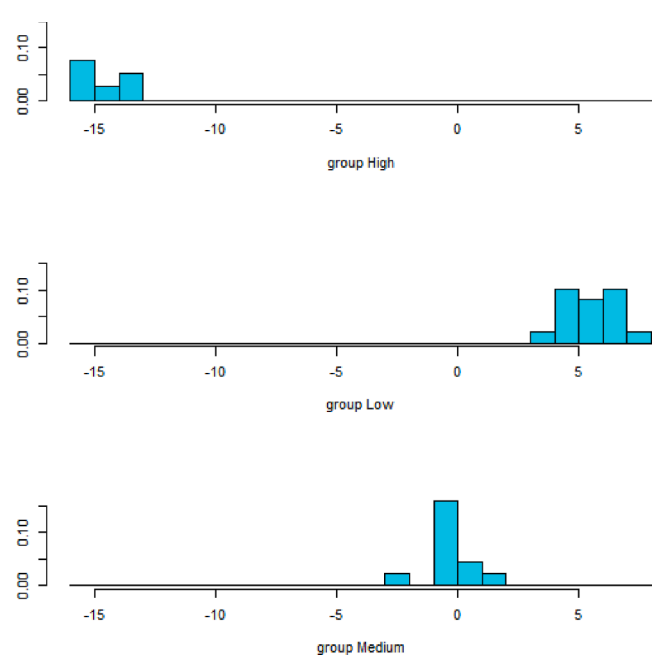

Fig. 4. LDA scores presented separately for each group as histograms.

3.5. Partial least squares regression

As previously mentioned in the Methods section, the root mean square errors obtained after 10-fold cross-validation were evaluated for each value of M Although the training error diminishes with M, the minimum cross-validated RMSEP estimated (CV) as well as the minimum bias corrected cross-validated RMSEP estimated (adjCV) were obtained when three partial least squares directions were selected.

Fig. S4 (Supplementary file) exhibits a plot of the predicted versus observed values obtained with the PLS model. In the developed three components PLS model, 99.44% of the variance of the predictor and 82% of the response were explained. The total RMSE obtained with the model was approximately 3.69 wt% and the coefficient of determination was 0.82 suggesting that the model can also accurately predict raw bovine milk adulteration with urea from the tested samples database.

3.6. Comparison between EIS and other methods to detect milk adulteration

Many studies apply different analytical techniques such as infrared spectroscopy (Santos, Pereira-Filho, & Rodriguez-Saona, 2013; Jha, Jaiswal, Borah, Gautam, & Srivastava, 2017), gas chromatography (Xie, Yu, & Gong, 2019) and Raman spectroscopy (Hu, Feng, Gao, Li-Chan, Grant, & Lu, 2015) to identify milk adulteration. Overall, these techniques provide a large amount of information and are combined with chemometrics tools like principal component analysis to select the most relevant information to process the available data. On the other hand, electrochemical methods as, for instance, EIS do not provide so much data as the above mentioned approaches. Thus, it is easier to process the resulting data constituting the spectra. Besides, the EIS is related to the transport of charges within the milk which is a more intuitive feature of the system than vibrational atomic levels of energy. Consequently, it provides a more accessible picture about the physicochemical action of the adulterant on the colloidal system studied (milk).

An advantage of the use of non-electrical approaches involving spectrophotometry or chromatography is the higher accuracy provided with these techniques in relation to electrical measurements. Some examples include reported values of 0.30 g/L for the RMSE of a PLS regression model developed in milk adulterated with urea (Santos, Pereira-Filho, & Rodriguez-Saona, 2013) or 0.50 g/l for the detection limit, corresponding to less than 1 wt% (Khan, Krishna, Majumder, & Gupta, 2015). However, the EIS approach considered in the current study can provide results in real time at a low cost. Moreover, as can be visualized in Table S1, the intra and inter day repeatability provided a good accuracy, since the intraday variability ranged between 0.84 and 6.02% for the three batches studied and the interday repeatability ranged between 1.84 and 8.36% suggesting that samples obtained from different days can be characterized confidently. It should be noted that interday repeatability was evaluated only for identical mass fractions of urea added to milk samples, Thus, some values were computed taking into account the three batches, whereas the other values were computed considering only batches 2 and 3. In addition, it does not require the use of chemical reagents or pretreatment of the raw milk. Besides, the amount of urea actually employed to adulterate raw milk is much larger than this detection limit (Khan, Krishna, Majumder, & Gupta, 2015). Thus, EIS can accurately discriminate raw milk adulteration with urea from a practical perspective.

4. Conclusion

A preliminary study was conducted to evaluate the accuracy of electrochemical impedance spectroscopy to predict raw bovine milk adulteration with urea. From the use of linear discriminant analysis, through the similarity between the different spectra, the detection limit of the technique was established as approximately 7 wt%. A confusion matrix applied to the LDA model cross-validated via leave-one-out approach, resulted in a 90% accuracy in classifying the adulterated samples between three groups. In addition, a partial least squares regression model was able to explain 82% of the results. The results also suggested that the urea forms aggregates in the solution colloidal that difficult the motion of the charged species causing a decrease in milk conductivity. Overall, despite the small amount of samples tested, the study indicates that the use of EIS can provide good results and be applied to evaluate raw bovine milk adulteration with urea. A more complete study including a larger number of samples and considering the seasonal variation in milk properties could provide more information regarding the underlying phenomena involved in bovine raw milk adulteration with urea.

CRediT authorship contribution statement

Taiz Alana Minetto: Data curation, Conceptualization, Formal analysis. **Beatriz Denardi França:** Data curation, Investigation. **Gabriel da Silva Dariz:** Methodology, Investigation. **Emiliano Amarante Veiga:** Methodology, Formal analysis. **Alessandro Cazonatto Galvão:** Formal analysis, Writing – review & editing. **Weber da Silva Robazza:** Methodology, Formal analysis, Investigation.

Declaration of Competing Interest

The authors declare that they have no known competing financial interests or personal relationships that could have appeared to influence the work reported in this paper.

Acknowledgements

The authors express their gratitude to FAPESC (Fundação de Amparo à Pesquisa e Inovação do Estado de Santa Catarina, grant no. 2019TR583) and to CAPES (Coordenação de Aperfeiçoamento de Pessoal de Nível Superior) for financial support.

Appendix A. Supplementary data

Supplementary data to this article can be found online at https://doi.org/10.1016/j.foodchem.2022.132678.

References

Ahirwar, R., Harilal, P. T., Srihari, K. A., & Pandey, M. C. (2014). Quality changes in milk adulterated with detergent, urea, ammonium sulphate and neutralizers. *Asian Journal of Dairy and Food Research, 34*(4), 285–289. https://doi.org/10.18805/ajdfr.v34i4.6879

Bates, D., Maechler, M., Bolker, B., & Walker, S. (2015). Fitting linear mixed-effects models using lme4. *Journal of Statistical Software, 67*(1), 1–48. https://doi.org/10.18637/jss.v067.i01

Bueno, L., Araujo, W. R., Salles, M. O., Kussuda, M. Y., & Paixão, T. R. L. C. (2014). Voltammetric electronic tongue for discrimination of milk adulterated with urea, formaldehyde and melamine. *Chemosensors, 2*(4), 251–266. https://doi.org/10.3390/chemosensors2040251

Chakraborty, S., Das, C., Bera, N. K., Chattopadhyay, D., Karmakar, A., & Chattopadhyay, S. (2017). Analytical modelling of electrical impedance based adulterant sensor for aqueous sucrose solutions. *Journal of Electroanalytical Chemistry, 784*, 133–139. https://doi.org/10.1016/j.jelechem.2016.11.055

Chalupa-Krebzdak, S., Long, C. J., & Bohrer, B. M. (2018). Nutrient density and nutritional value of milk and plant-based milk alternatives. *International Dairy Journal, 78*, 84–92. https://doi.org/10.1016/j.idairyj.2018.07.018

Chen, B., Lewis, M. J., & Grandison, A. S. (2014). Effect of seasonal variation on the composition and properties of raw milk destined for processing in the UK. *Food Chemistry, 158*, 216–223. https://doi.org/10.1016/j.foodchem.2014.02.118

Ciucci, F. (2019). Modeling electrochemical impedance spectroscopy. *Current Opinion in Electrochemistry, 13*, 132–139. https://doi.org/10.1016/j.coelec.2018.12.003

Comets, E., Lavenn, A., & Lavielle, M. (2017). Parameter estimation in nonlinear mixed effect models using saemix an R implementation of the SAEM algorithm. *Journal of Statistical Software, 80*(3), 1–41. https://doi.org/10.18637/jss.v080.i03

Das, C., Chakraborty, S., Acharya, K., Bera, N. K., Chattopadhyay, D., Karmakar, A., & Chattopadhyay, S. (2017). FT-MIR supported electrical impedance spectroscopy based study of sugar adulterated honeys from different floral origins. *Talanta, 171*, 327–334. https://doi.org/10.1016/j.talanta.2017.05.016

Durante, G., Becari, W., Lima, F. A. S., & Peres, H. E. M. (2016). Electrical impedance sensor for real-time detection of bovine milk adulteration. *IEEE Sensors Journal, 16* (4), 861–865. https://doi.org/10.1109/JSEN.2015.2494624

Elzhov, T. V., Mullen, K. M., Spiess, A. N., & Bolker, B. (2016). minpack.lm: R interface to the Levenberg-Marquardt non-linear least squares algorithm found in MINPACK, plus support for bounds. R package version 1.2-1.

Grimnes, S., & Martinsen, O. G. (2015). Bioimpedance and Bioelectricity Basics. *Academic Press*. https://doi.org/10.1016/C2012-0-06951-7

Grossi, M., Di Lecce, G., Toschi, T. G., & Riccò, B. (2014). Fast and accurate determination of olive oil acidity by electrochemical impedance spectroscopy. *IEEE Sensors Journal, 14*(9), 2947–2954. https://doi.org/10.1109/jsen.2014.2321323

Grossi, M., Lazzarini, R., Lanzoni, M., & Riccò, B. (2011). A novel technique to control ice cream freezing by electrical characteristics analysis. *Journal of Food Engineering, 106* (4), 347–354. https://doi.org/10.1016/j.jfoodeng.2011.05.035

Handford, C. E., Campbell, K., & Elliott, C. T. (2016). Impacts of milk fraud on food safety and nutrition with special emphasis on developing countries. *Comprehensive Reviews in Food Science and Food Safety, 15*(1), 130–142. https://doi.org/10.1111/1541-4337.12181

Hartmann, K. I., Samudrala, R., Hofmann, T., Schieberle, P., Hitzmann, B., & Hinrichs, J. (2015). Thermo-physical parameters applied for instrumental profiling and statistical evaluation of German Emmental Cheese. International Dairy Journal, v. 49, p. 118-124. https:///doi.org/10.1016/j.idairyj.2015.05.004.

Hu, Y., Feng, S., Gao, F., Li-Chan, E. C., Grant, E., & Lu, X. (2015). Detection of melamine in milk using molecularly imprinted polymers-surface enhanced Raman spectroscopy. *Food Chemistry, 176*, 123–129. https://doi.org/10.1016/j.foodchem.2014.12.051

James, G., Witten, D., Hastie, T., & Tibshirani, R. (2021). *An Introduction to Statistical Learning with Applications in R* (2nd Edition, p. 622p). New York: Springer.

Jenkins, T. C., & McGuire, M. A. (2006). Major advances in nutrition: Impact on milk composition. *Journal of Dairy Science, 89*(4), 1302–1310. https://doi.org/10.3168/jds.S0022-0302(06)72198-1

Jha, S. N., Jaiswal, P., Borah, A., Gautam, A. K., & Srivastava, N. (2017). Detection and quantification of urea in milk using attenuated total reflectance-Fourier transform infrared spectroscopy. *Food and Bioprocess Technology, 8*(4), 926–933. https://doi.org/10.1007/s11947-014-1455-y

Jung, Y. M., Czarnik-Matusewicz, B., & Bin Kim, S. (2004). Characterization of concentration-dependent infrared spectral variations of urea aqueous solutions by principal component analysis and two-dimensional correlation spectroscopy. *Journal of Physical Chemistry B, 108*, 13008–13014. https://doi.org/10.1021/jp049150c

Kassambara, A., & Mundt, F. (2020). factoextra: Extract and visualize the results of multivariate data analysis. *R package version, 1*, 7. https://CRAN.R-project.org/package=factoextra.

Khan, K. M., Krishna, H., Majumder, S. K., & Gupta, P. K. (2015). Detection of urea adulteration in milk using near-infrared Raman spectroscopy. *Food Analytical Methods, 8*, 93–102. https://doi.org/10.1007/s12161-014-9873-z

Lawton, B. A., & Pethig, R. (1993). Determining the fat content of milk and cream using conductivity measurements. *Measurement Science and Technology, 4*(1), 38–41.

Le, S., Josse, J., & Husson, H. (2008). FactoMineR: An R package for multivariate analysis. *Journal of Statistical Software, 25*(1), 1–18. https://doi.org/10.18637/jss.v025.i01

Li, H., Chen, S., Chen, H., Guo, P., Li, T., & Xu, Q. (2020). Effect of thermal oxidation of adulteration at low concentrations in extra virgin olive oil: Study based on laser-induced fluorescence spectroscopy combined with KPCA-LDA. *Food Chemistry, 309*, Article 125669. https://doi.org/10.1016/j.foodchem.2019.125669

Lopes, A. M., Machado, J. A. T., Ramalho, E., & Silva, V. (2018). Milk characterization using electrical impedance spectroscopy and fractional models. *Food Analytical Methods, 11*, 901–912. https://doi.org/10.1007/s12161-017-1054-4

Mafy, N. N., Afrin, T., Rahman, M. M., Mollah, M. Y. A., & Susan, M. A. B. H. (2015). Effect of temperature perturbation on hydrogen bonding in aqueous solutions of different urea concentrations. *RSC Advances, 5*(73), 59263–59272. https://doi.org/10.1039/C5RA10718K

Mevik, B. H., Wehrens, R., & Liland, K. H. (2019). pls: Partial least squares and principal components regression. R package version 2.7-2.

Paszkowski, B., Wilczek, A., Szyptowska, A., Nakonieczna, A., & Skierucha, W. (2014). A low frequency sensor for determination of honey electrical properties in varying temperature conditions. *Journal of Food Engineering, 138*, 17–22. https://doi.org/10.1016/j.jfoodeng.2014.04.004

Pereira, P. C. (2014). Milk nutritional composition and its role in human health. *Nutrition, 30*(6), 619–627. https://doi.org/10.1016/j.nut.2013.10.011

Pham, A. C., Peng, K. Y., Salim, M., Ramirez, G., Hawley, A., Clulow, A. J., & Boyd, B. J. (2020). Correlating digestion-driven self-assembly in milk and infant formulas with changes in lipid composition. *ACS Applied Bio Materials, 3*(5), 3087–3098. https://doi.org/10.1021/ascabm.0c00131

R Core Team. (2019). *R: A language and environment for statistical computing*. Vienna, Austria: R Foundation for Statistical Computing. Available in http://www.r-project.org.

Rosenberg, M. (2021). Thoughts about food security, food loss and waste and what has to be done. *AIMS Agriculture and Food, 6*(3), 797–798. https://doi.org/10.3934/agrfood.2021048

Santos, P. M., Pereira-Filho, E. R., & Rodriguez-Saona, L. E. (2013). Rapid detection and quantification of milk adulteration using infrared microspectroscopy and chemometric analysis. *Food Chemistry, 138*(1), 19–24. https://doi.org/10.1016/j.foodchem.2012.10.024

Soares, C., Machado, J. A. T., Lopes, A. M., Vieira, E., & Delerue-Matos, C. (2020). Electrochemical impedance spectroscopy characterization of beverages. *Food Chemistry, 302*, Article 125345. https://doi.org/10.1016/j.foodchem.2019.125345

Toledo, P. R. A. B., Toci, A. T., Pezza, H. R., & Pezza, L. (2017). Fast and simple method for identification of adulteration of cow's milk with urea using diffuse reflectance spectroscopy. *Analytical Methods, 9*, 6357–6364. https://doi.org/10.1039/C7AY02354E

Veiga, E. A., & Bertemes-Filho, P. (2012). Bioelectrical impedance analysis of bovine milk fat. *Journal of Physics: Conference Series, 407*, Article 012009. https://doi.org/10.1088/1742-6596/407/1/012009

Xie, W. Q., Yu, K. X., & Gong, Y. X. (2019). Rapid and quantitative determination of urea in milk by reaction headspace gas chromatography. *Microchemical Journal, 147*, 838–841. https://doi.org/10.1016/j.microc.2019.03.063

Zhu, X., Guo, W., & Liang, Z. (2015). Determination of the fat content in cows milk based on dielectric properties. *Food and Bioprocess Technology, 8*(4), 1485–1494. https://doi.org/10.1007/s11947-015-1508-x