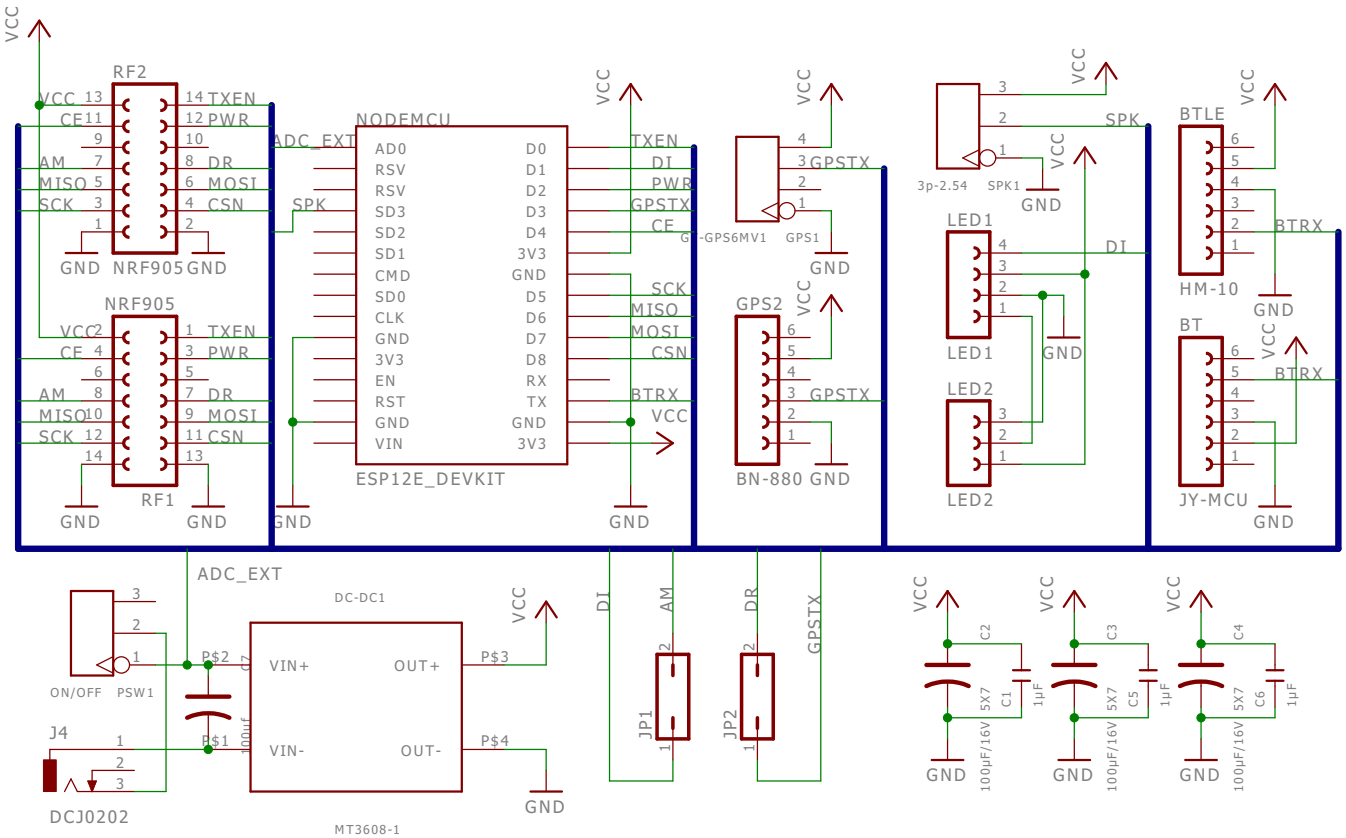

Shield for SoftRF project.

Author: Linar Yusupov

http://github.com/lyusupov/SoftRF

Version 1.1

SOFTRF_SHIELD

29.01.2017 1:19

Sheet: 1/1