BLOCK DIAGRAM

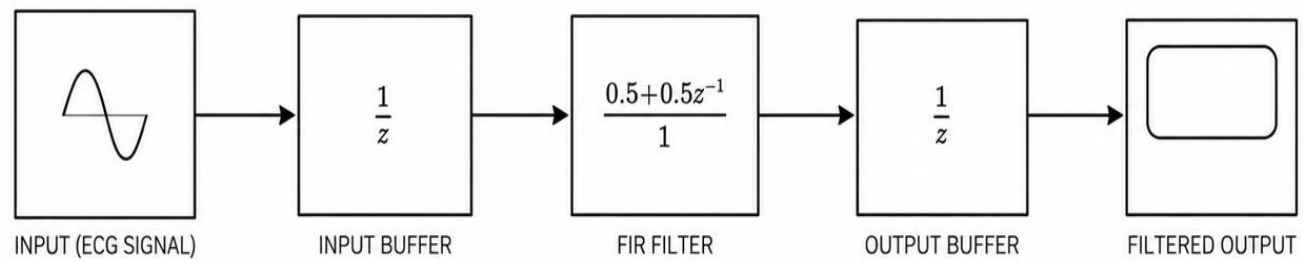

Input (ECG Signal):

This is the original ECG signal obtained from the patient. It contains heartbeat information along with unwanted noise. The signal is given as the input to the filtering system.

Input Buffer (1/z):

This block acts as a delay element in the digital system. It delays the input signal by one sample time. **1/z** represents a one-sample delay element.

FIR Filter *(*Main Block):

This is the main block concentrated in the system. FIR stands for Finite Impulse Response filter. The filter performs the main signal processing operation. The filter reduces unwanted noise present in the ECG signal. This block plays an important role in obtaining a clear ECG output.

The term $\mathbf{0.5+0.5z^{-1}/1}$ indicates that the FIR filter combines equal portions of the current and previous input samples to produce a smoother output signal.

Output Buffer:

This block introduces another one-sample delay. It stabilizes the processed signal before output.

Filtered Output:

This is the final filtered ECG signal obtained from the system. Noise and unwanted disturbances are reduced significantly.

ARCHITECTURE

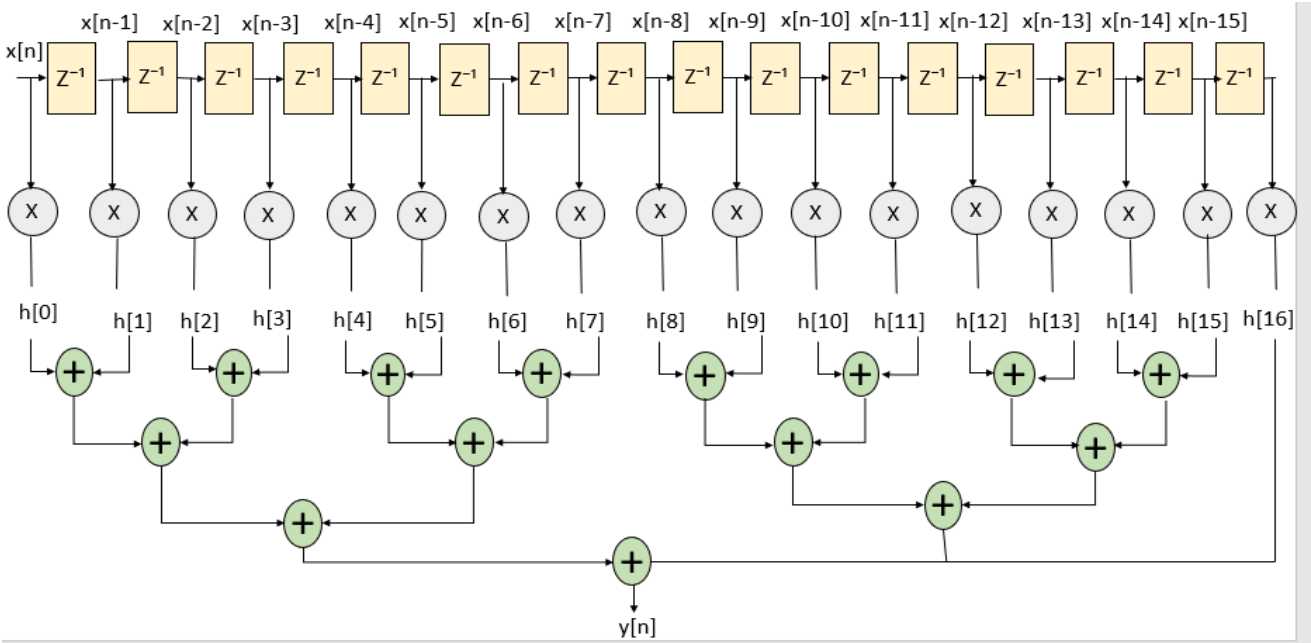

FORMULA:

$$y[n] = \sum_{k=0}^{N-1} h[k] \cdot x[n-k]$$

y[n] = h[0]x[n] + h[1]x[n−1] + h[2]x[n−2] + h[3]x[n−3] + h[4]x[n−4] + h[5]x[n−5] + h[6]x[n−6] + h[7]x[n−7] + h[8]x[n−8] + h[9]x[n−9] + h[10]x[n−10] + h[11]x[n−11] + h[12]x[n−12] + h[13]x[n−13] + h[14]x[n−14] + h[15]x[n−15]

Delay Element: Stores the input signal for one sample time. Produces delayed versions such as x[n−1],x[n−2], etc. Helps the filter use previous signal values for processing.

Multiplier Block: Multiplies each delayed signal with a filter coefficient commonly fractional values. Performs the main weighting operation in the FIR filter.

Adder Block: Adds all multiplied outputs together. Produces the final filtered output signal y[n]. Combines present and delayed sample contributions.

Filter Coefficients : These are constant values used for filtering. They control the filter response.

Output Signal : Represents the final filtered signal y[n].