cisco Live!
Let's go
#CiscoLive

The bridge to possible

Routing IPv6 In VXLAN BGP EVPN Fabrics

Venkat Kirishnamurthyi , Principal Architect, CX

BRKDCN-2682

Cisco Webex App

Questions?

Use Cisco Webex App to chat
with the speaker after the session

How

1. Find this session in the Cisco Live Mobile App
2. Click “Join the Discussion”
3. Install the Webex App or go directly to the Webex space
4. Enter messages/questions in the Webex space

Webex spaces will be moderated by the speaker until June 9, 2023.

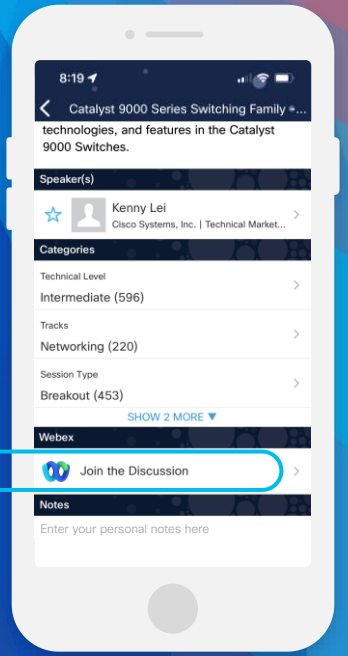

https://ciscolive.ciscoevents.com/ciscolivebot/# BRKDCN-2682

© 2023 Cisco and/or its affiliates. All rights reserved. Cisco Public

Agenda

- Introduction
- Why IPv6 in the Data Center?
- Introduction to Underlay and Overlay Networks
- IPv6 Unicast Routing in the Overlay with IPv4 Underlay
- IPv6 Unicast Routing in the Overlay with IPv6 Underlay
- Conclusion

© 2023 Cisco and/or its affiliates. All rights reserved. Cisco Public

IPv6 in The Data Center

Why IPv6 in the DC?

Key IPv6 Drivers in the Data Center

- We are running out of IPv4 addresses
- Explosion of IP address requirements in the Data center due to:
  - Disaggregation of application into micro services
  - Proliferation of Kubernetes and Containers in the Data center
- Massive scale service provider /Cloud Data center deployments
- Federal Government Mandate / Requirements
  - DOD requirements to transition to IPv6 by 2025
  - FedRAMP Mandatory IPv6 only requirement

© 2023 Cisco and/or its affiliates. All rights reserved. Cisco Public

IPv6 Address Hierarchy

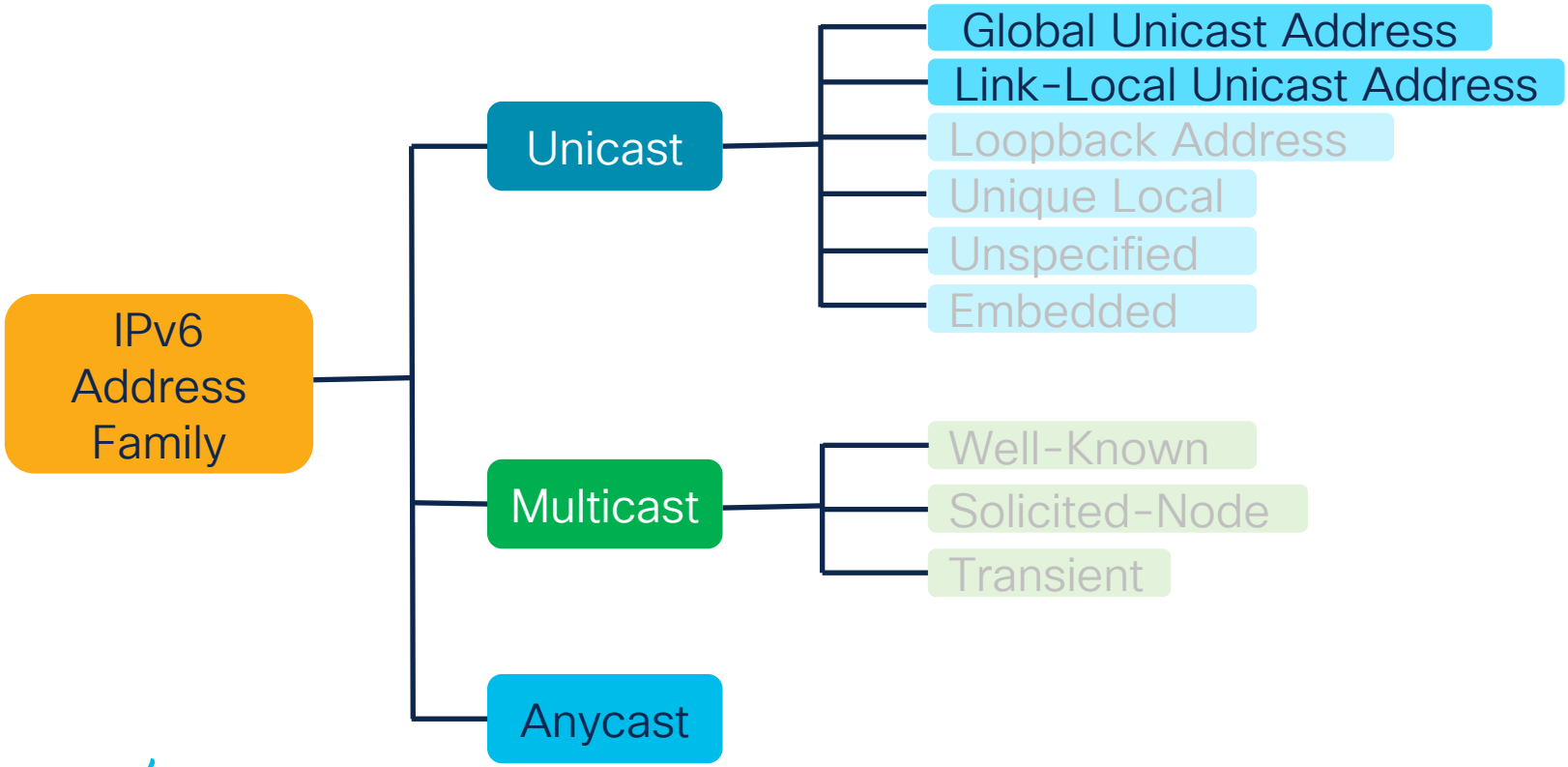

© 2023 Cisco and/or its affiliates. All rights reserved. Cisco Public

IPv6 Unicast Address
Global Unicast Address

Global unicast addresses (GUAs) are:

- Routable globally and reachable in the IPv6 Internet
- Same as routable IPv4 addresses

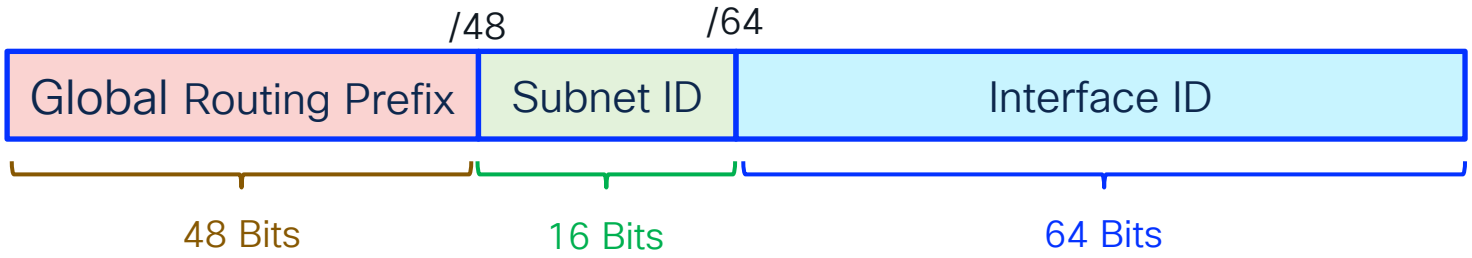

© 2023 Cisco and/or its affiliates. All rights reserved. Cisco Public

IPv6 Unicast Address
Link-Local Address

- Link-Local address : unicast address confined to a subnet/segment; Typically, auto created
- Non-Routable address
- Used to communicate with routers, DHCPv6 servers in the same subnet/segment

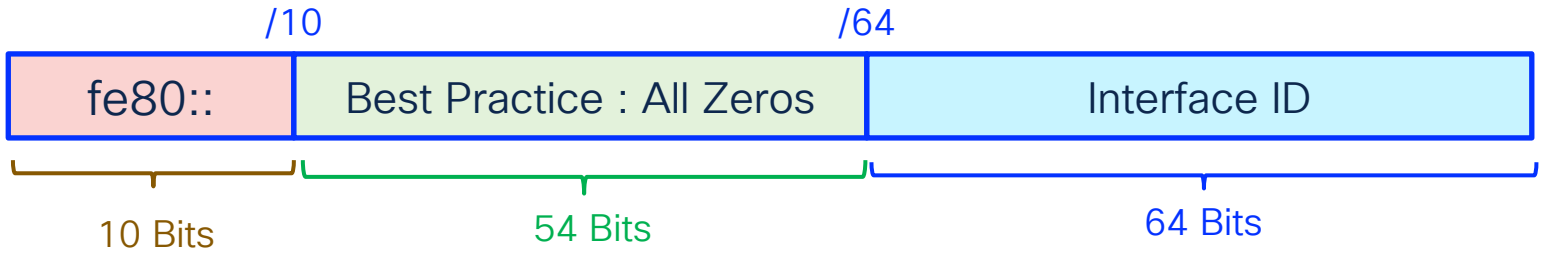

© 2023 Cisco and/or its affiliates. All rights reserved. Cisco Public

IPv6 Multicast Address
Well-Known Multicast Address

Well-Known Multicast Address assigned by IANA :

- Uses the prefix ff00::/12
- Are predefined or reserved multicast addresses.
  - ff02::1 : All IPv6 Devices
  - ff02::2 : All IPv6 routers

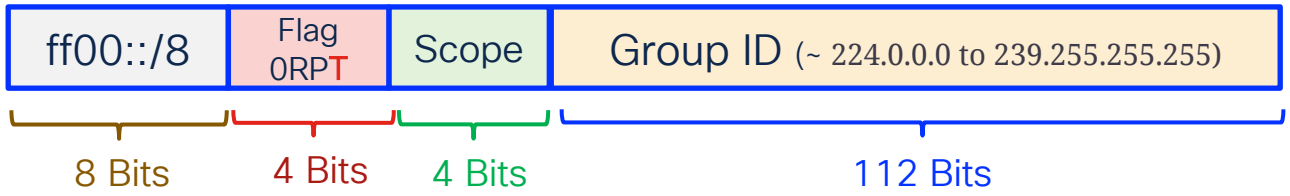

T- Flag: 0 – Well-defined; 1- Transient/ Dynamically defined

© 2023 Cisco and/or its affiliates. All rights reserved. Cisco Public

IPv6 Multicast Address
Solicited-node multicast Address

Solicited-mode Multicast Address:

- Used by Neighbor Discovery Protocol for Address resolutions and Duplicate Address Detection (DAD)
- Auto created using a special mapping of the device unicast address with the solicited-node multicast prefix ff02:0:0:0:0:1:ff00::/104
- Auto created for every unicast IPv6 address on a node

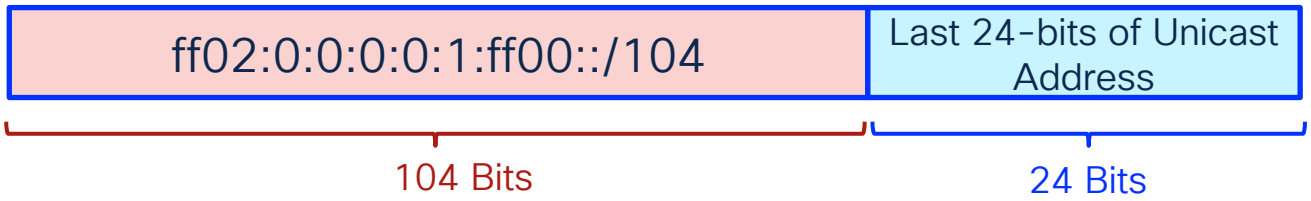

© 2023 Cisco and/or its affiliates. All rights reserved. Cisco Public

HW that supported VXLAN with IPv6 in underlay

Cisco Nexus 9332C	Cisco Nexus 9364C	Cisco Nexus 9300-EX
Cisco Nexus 9300-FX	Cisco Nexus 9300-FX2	Cisco Nexus 9300-FX3
Cisco Nexus 9300-FXP	Cisco Nexus 9300-GX\	Cisco Nexus 9300-GX2

© 2023 Cisco and/or its affiliates. All rights reserved. Cisco Public

Introduction to Underlay and Overlay Networks

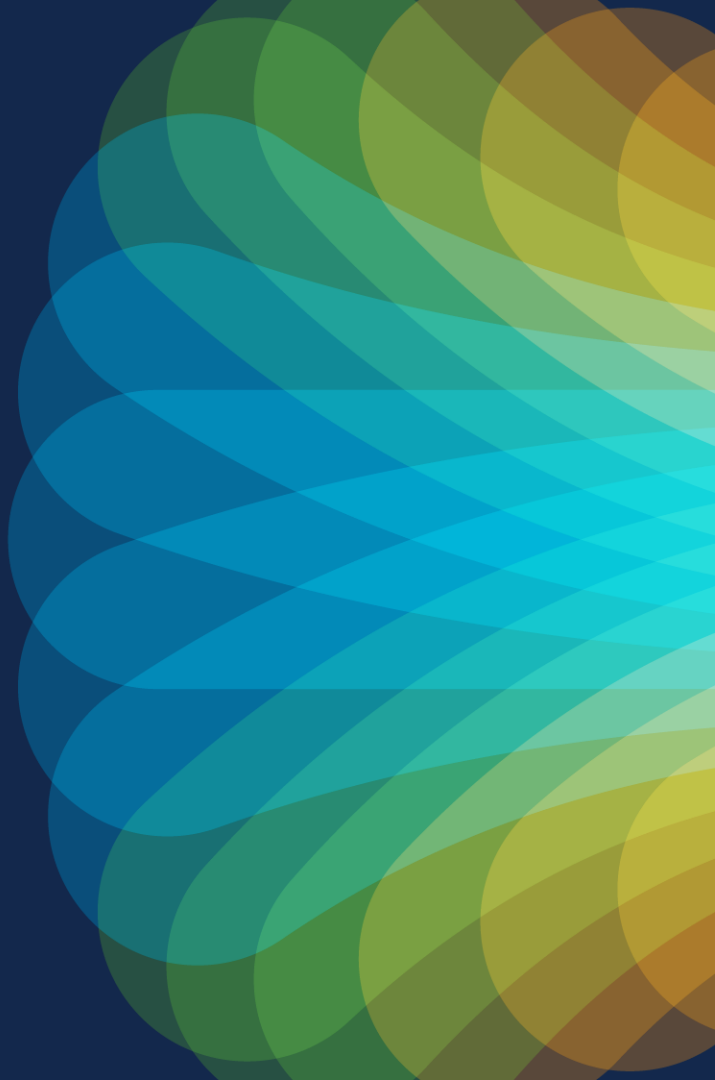

Underlay Network Architecture

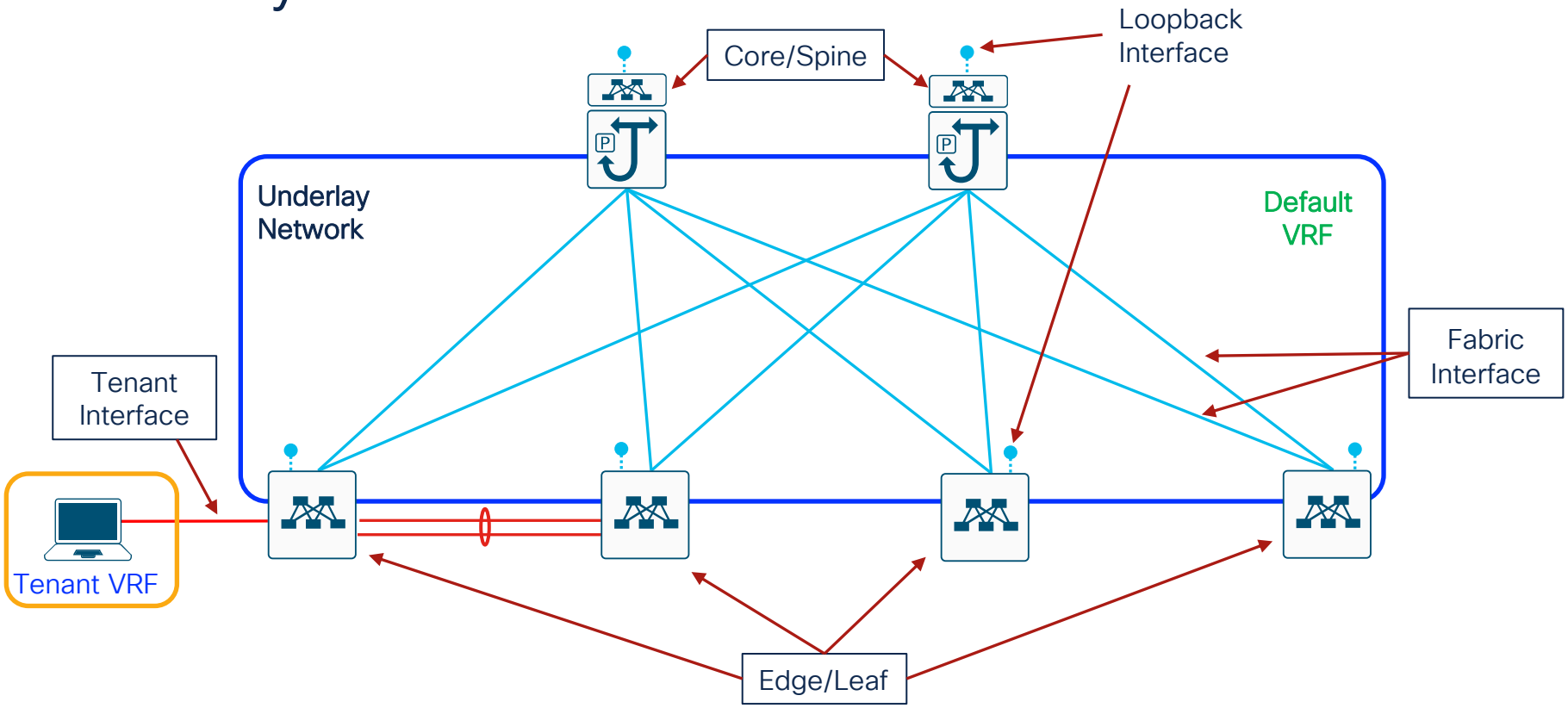

© 2023 Cisco and/or its affiliates. All rights reserved. Cisco Public

Underlay Network Protocols
Unicast Protocols

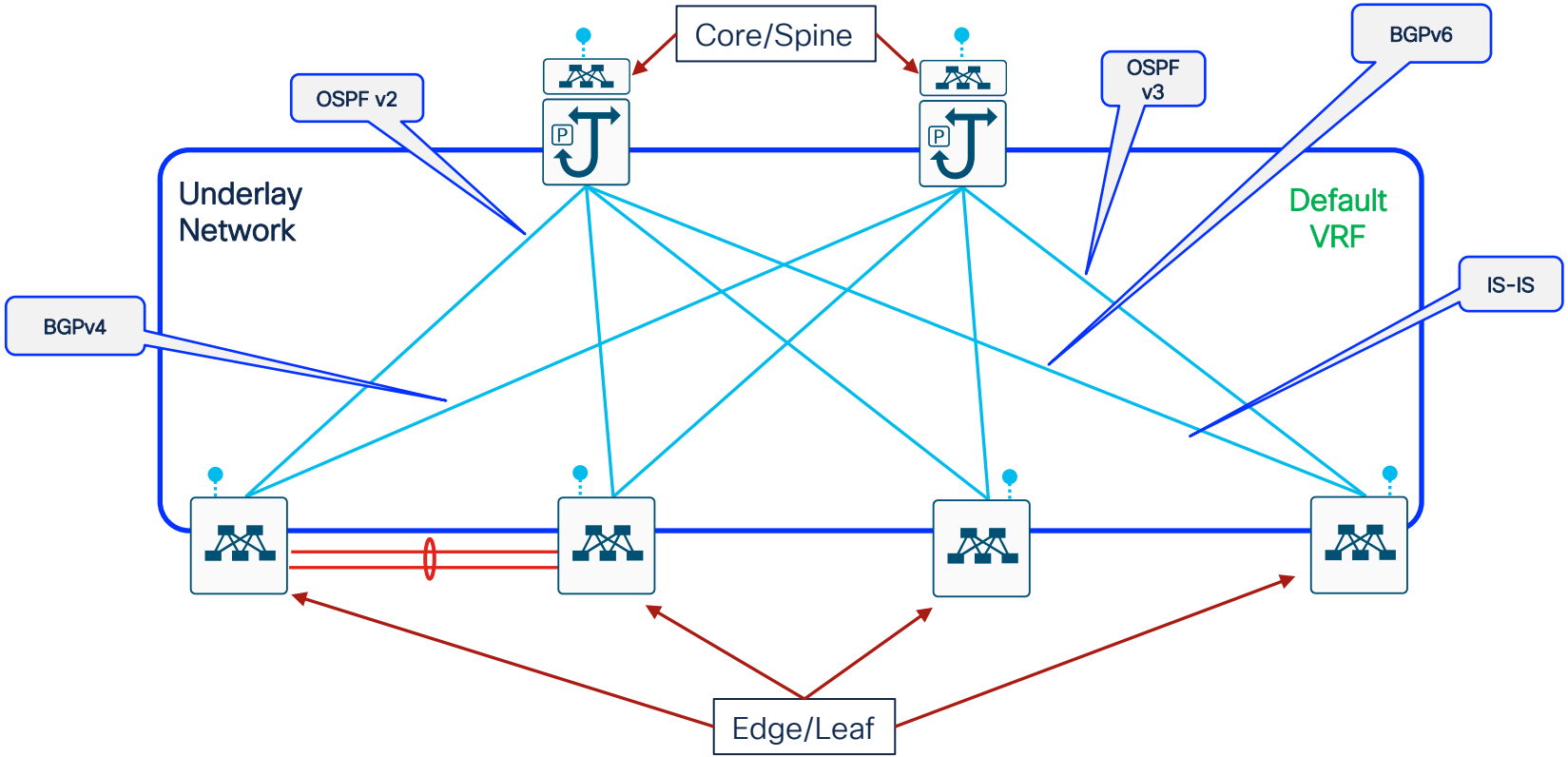

© 2023 Cisco and/or its affiliates. All rights reserved. Cisco Public

Underlay Network Protocols
Unicast Protocol

Device Role	Interface	Protocol	Function
Spine, Leaf	Loopback0	OSPF/ISIS/BGP	Router ID
Leaf	Loopback1	OSPF/ISIS/BGP	NVE Source Int
Spine, Leaf	Fabric Interface	OSPF/ISIS/BGP	Switch Peering
Leaf (vPC)	vPC backup SVI	OSPF/ISIS/BGP	vPC peer link routing

© 2023 Cisco and/or its affiliates. All rights reserved. Cisco Public

Underlay Network Protocols
Multicast Protocols

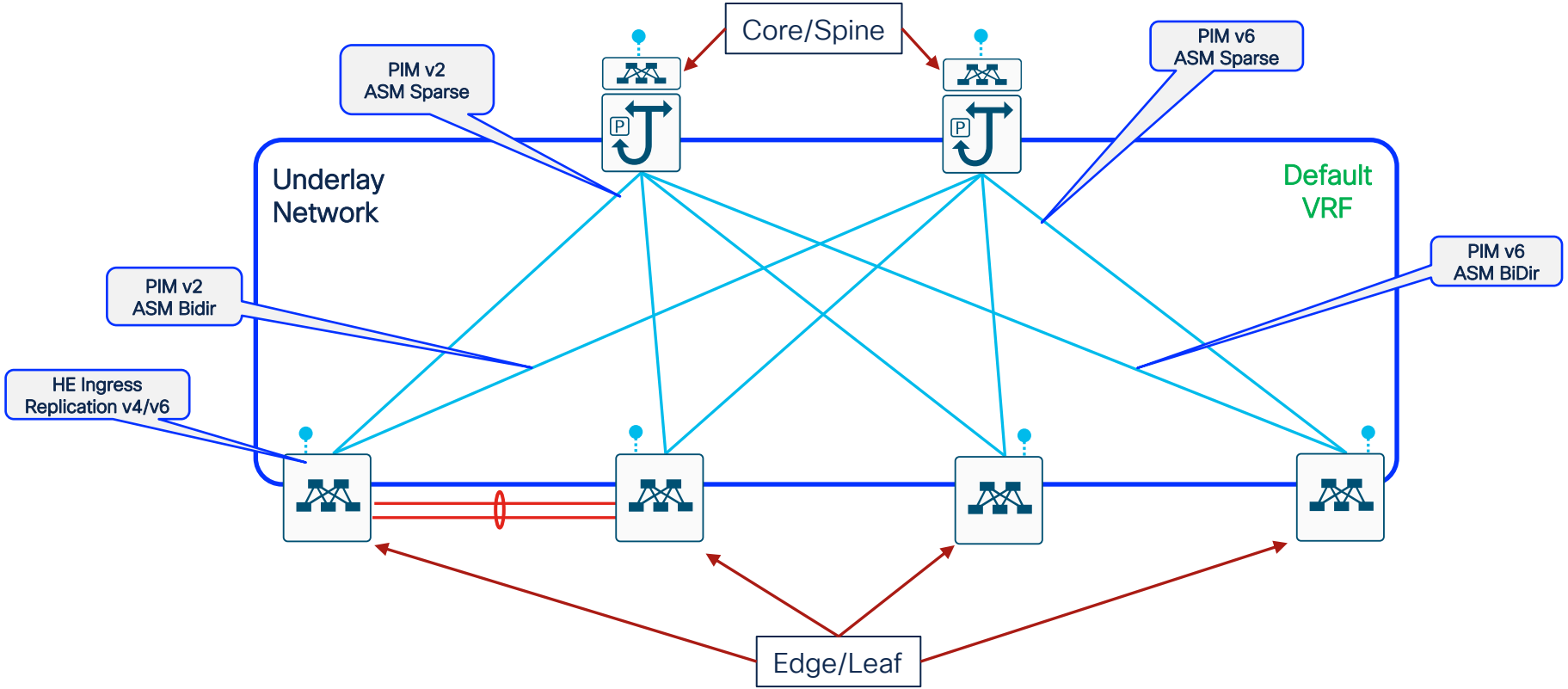

© 2023 Cisco and/or its affiliates. All rights reserved. Cisco Public

Overlay Network Architecture

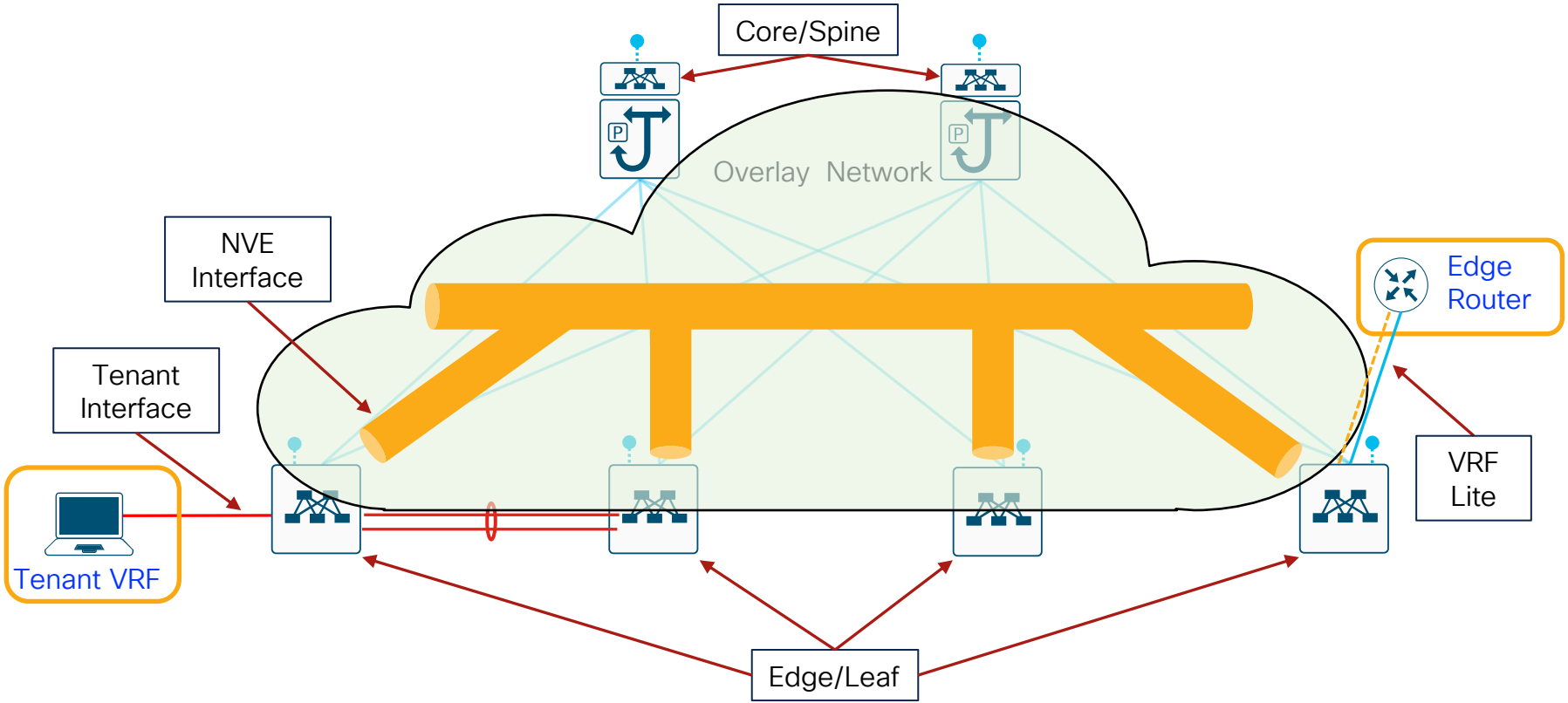

© 2023 Cisco and/or its affiliates. All rights reserved. Cisco Public

Overlay Network Protocols
Unicast

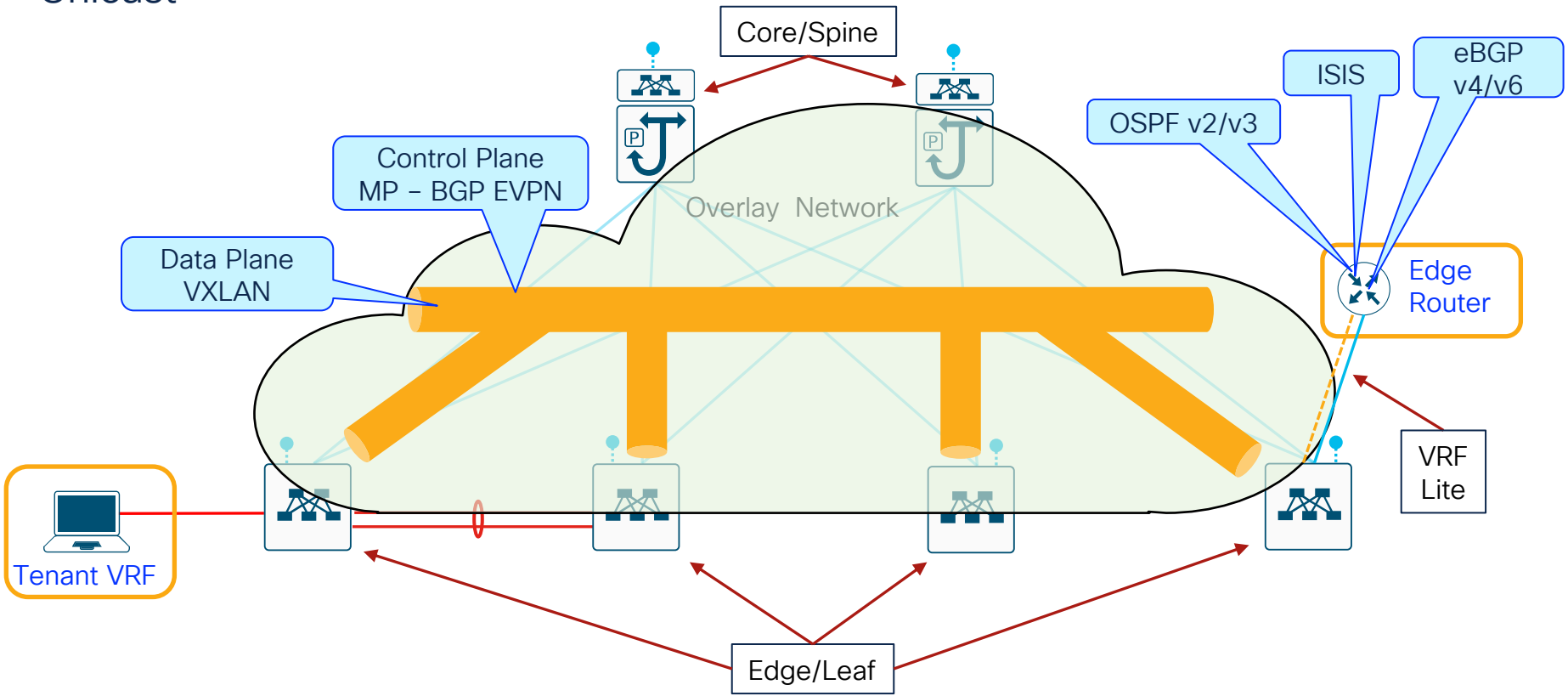

© 2023 Cisco and/or its affiliates. All rights reserved. Cisco Public

Overlay Network Protocols
Unicast Protocol

Device Role	Interface	Protocol	Function
Leaf	L2 VNI SVI	BGP EVPN	Anycast Gateway Subnet
Leaf	L3 VNI SVI	BGP EVPN	VRF Routing
Spine	N/A	BGP EVPN	Route Reflector
Border Leaf/Gateway	External Interface	OSPF/ISIS/eBGP	External Routing

© 2023 Cisco and/or its affiliates. All rights reserved. Cisco Public

Overlay Network Protocols
Multicast

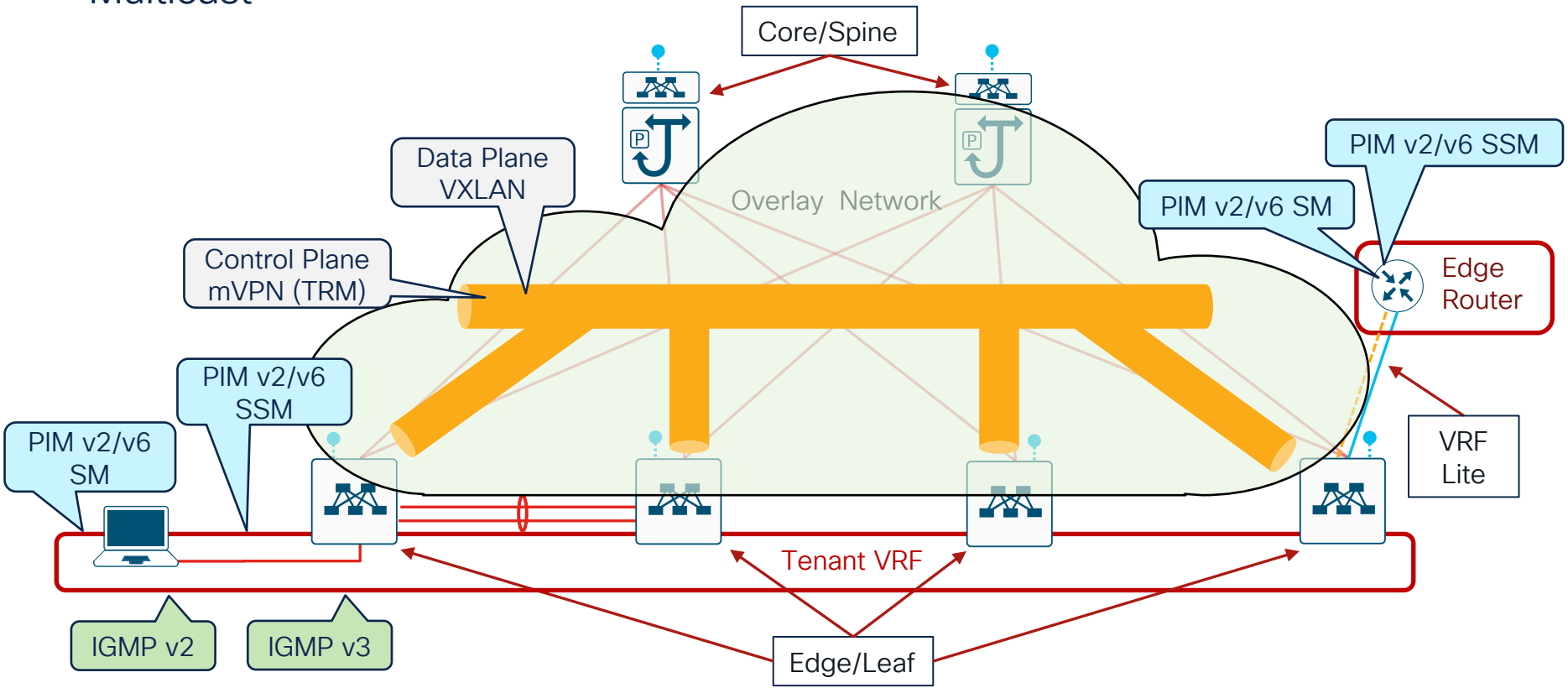

© 2023 Cisco and/or its affiliates. All rights reserved. Cisco Public

Overlay Network Protocols
Multicast Protocol

Device Role	Interface	Protocol	Function
Leaf	L2 VNI SVI	PIM v2/PIM v6 mVPN	Multicast Routing
Leaf	L3 VNI SVI	PIM v2/PIM / mVPN	Multicast Routing
Leaf	L2 VNI SVI	IGMPv2/v3	Host Join/Leave
Leaf	L3 VNI SVI	IGMPv2/v3	Host Join/Leave
Border Leaf/Gateway	External Interface	PIM v2/PIM v6	External Multicast Routing

© 2023 Cisco and/or its affiliates. All rights reserved. Cisco Public

VXLAN IPv6 Deployment modes in the Data Center

cisco Live!

VXLAN IPv6 routing in the Data Center

- IPv6 routing in a IPv4 Underlay
  - IPv6 specific configs needed in a IPv4 Underlay
  - IPv6 routing in the overlay with IPv4 in the Underlay
- IPv6 routing in a IPv6 Underlay
  - VXLAN IPv6 deployment in the underlay
  - IPv6 routing in the overlay with IPv6 in the Underlay

© 2023 Cisco and/or its affiliates. All rights reserved. Cisco Public

Adding configs to IPv4 underlay to support IPv6 in the Overlay

VXLAN Headers IPv6 transport thru IPv4 Underlay

The IPv6 packet is encapsulated in the overlay as IPv4 UDP packets and uses IPv4 routing to transport the VXLAN encapsulated traffic.

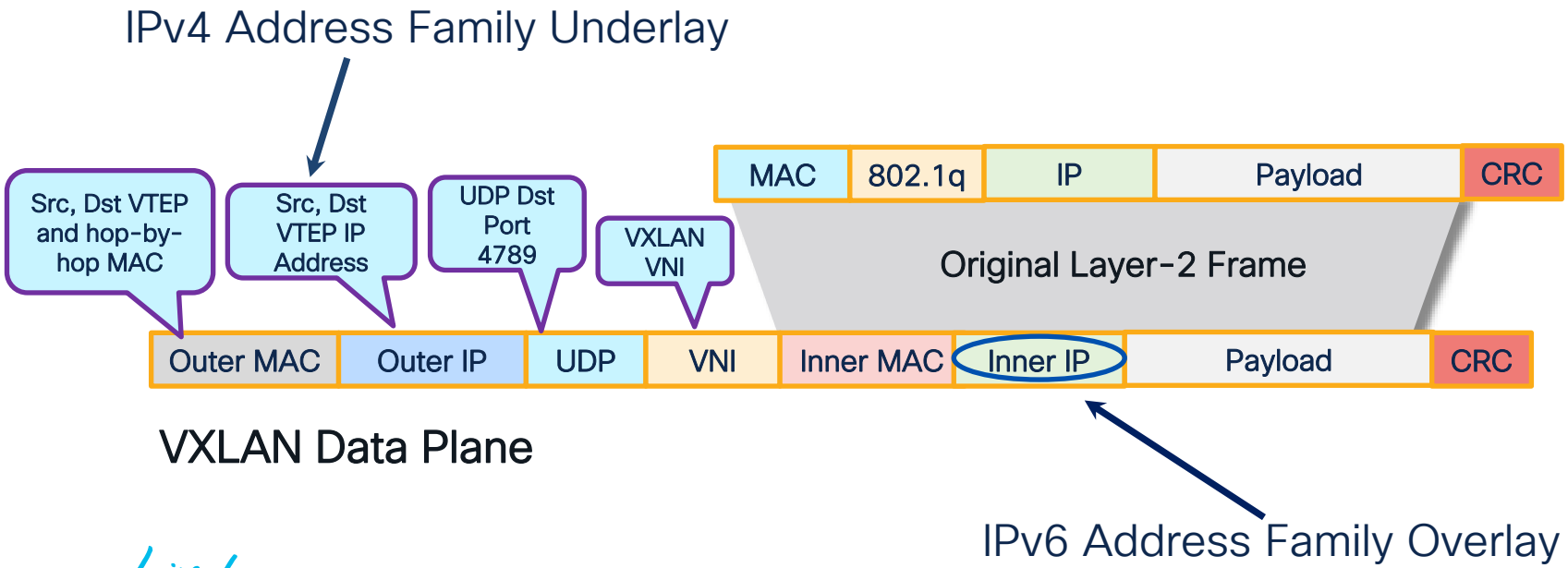

© 2023 Cisco and/or its affiliates. All rights reserved. Cisco Public

IPv6 Overlay Configuration Steps

- Synchronize IPv6 Neighbor discovery in the vPC domain
- Configure IPv6 gateway address on the L2VNI SVI and host
- Enable IPV6 Forwarding for L3VNI VLANs
- The IPv6 Address Family must be enabled in the VRF and BGP EVPN Configurations

© 2023 Cisco and/or its affiliates. All rights reserved. Cisco Public

IPv6 Configuration on SVIs

- Configure IPv6 ND synchronize between vpc domain.
- Assign IPv6 GW address on L2VNI SVI and enable IPv6 forwarding on SVIs for L3 VNI VLANs.
- The IPv6 address “use-link-local-only” serves the same purpose as “ip forward” for IPv4

L2VNI AND VPC CONFIG

```
vpc domain 1
<snip>
ipv6 nd synchronize
<snip>
interface Vlan13
  no shutdown
  vrf member tenant-1
  ip address 192.168.13.254/24 tag 12345
  ipv6 address 2023:192:168:13::254/64 tag 12345
  fabric forwarding mode anycast-gateway
```

L3VNI CONFIG

```
interface Vlan3000
  no shutdown
  mtu 9216
  vrf member tenant-1
  no ip redirects
  ip forward
  ipv6 address use-link-local-only
  no ipv6 redirects
```


© 2023 Cisco and/or its affiliates. All rights reserved. Cisco Public

Enable IPv6 AF in VRFs

- Add configuration to the VRF definition
- Add configuration to the VRF definition under BGP

VRF

```
vrf context tenant-1
  vni 50000
  rd auto
  address-family ipv4 unicast
    route-target both auto
    route-target both auto evpn
  address-family ipv6 unicast
    route-target both auto
    route-target both auto evpn
```

BGP VRF

```
router bgp 65501
  vrf tenant-1
    address-family ipv4 unicast
      advertise l2vpn evpn
      redistribute <..> fabric-rmap-redist-subnet
      maximum-paths ibgp 2
    address-family ipv6 unicast
      advertise l2vpn evpn
      redistribute <..> fabric-rmap-redist-subnet
      maximum-paths ibgp 2
```


© 2023 Cisco and/or its affiliates. All rights reserved. Cisco Public

VXLAN IPv6 unicast routing in the Overlay with IPv4 Underlay

IPv6 overlay host route advertisement

Type	MAC/Length	L2VNI/RT	IP/Length	L3VNI /RT	Next-Hop	SEQ.
2	0000.2500.0001 /48	2500, 65500:2500	2023:172:16:10::100/128	5000,65500:5000	10.10.100.15	
2	0000.2500.0002 /48	2500, 65500:2500	2023:172:16:10::101/128	5000,65500:5000	10.10.100.16	
2	0000.3000.0003 /48	3000, 65500:3000	2023:172:16:20::100/128	5000,65500:5000	10.10.100.18	

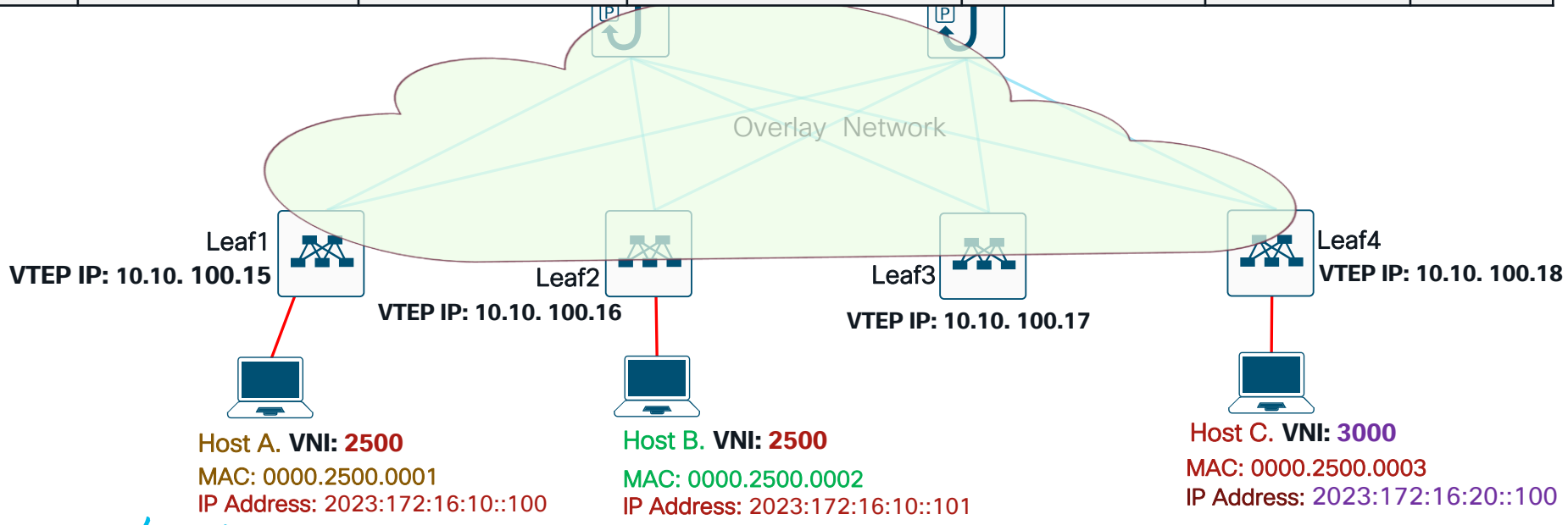

© 2023 Cisco and/or its affiliates. All rights reserved. Cisco Public

IPv6 overlay Packet Forwarding (Route)

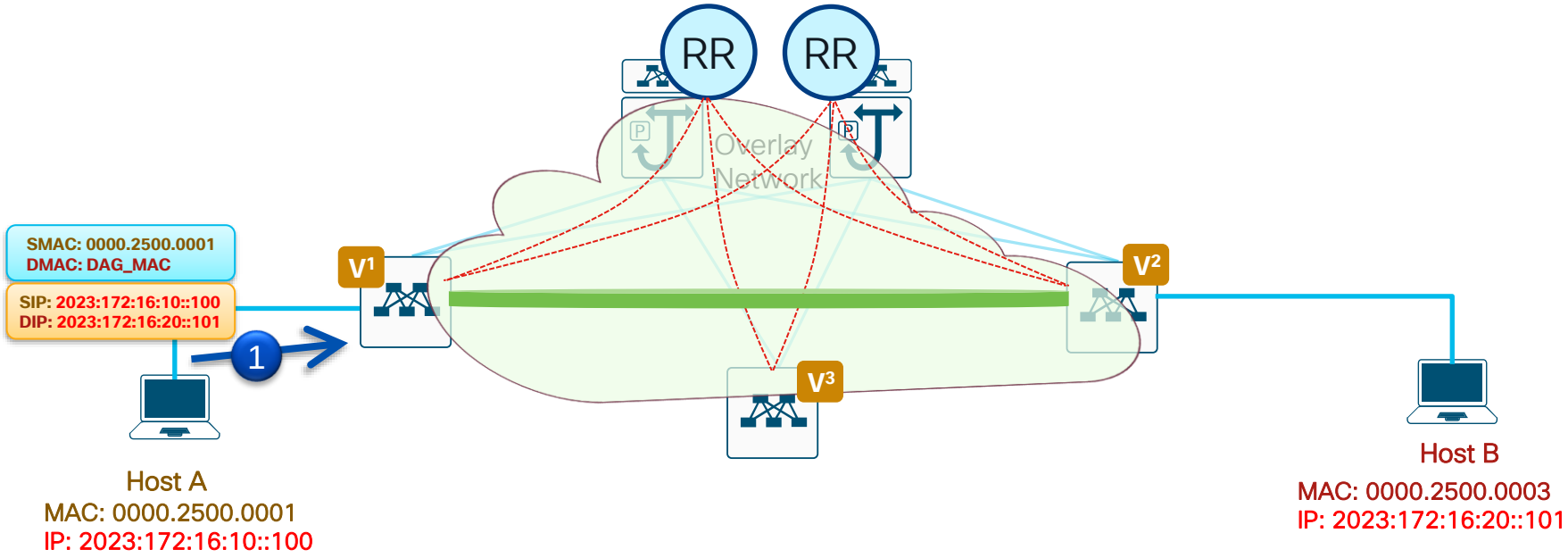

1 Host A needs to send packets to Host B sends it to VTEP V1

V1 IP	10.10.100.15
V2 IP	10.10.100.16
V3 IP	10.10.100.17

© 2023 Cisco and/or its affiliates. All rights reserved. Cisco Public

IPv6 overlay Packet Forwarding (Route)

MAC, IP	VNI	NH	VRF
0000.2500.0001 2023:172:16:10::100	30000	Local	50000
0000.2500.0003 2023:172:16:20::101	30005	10.10.100.16	50000

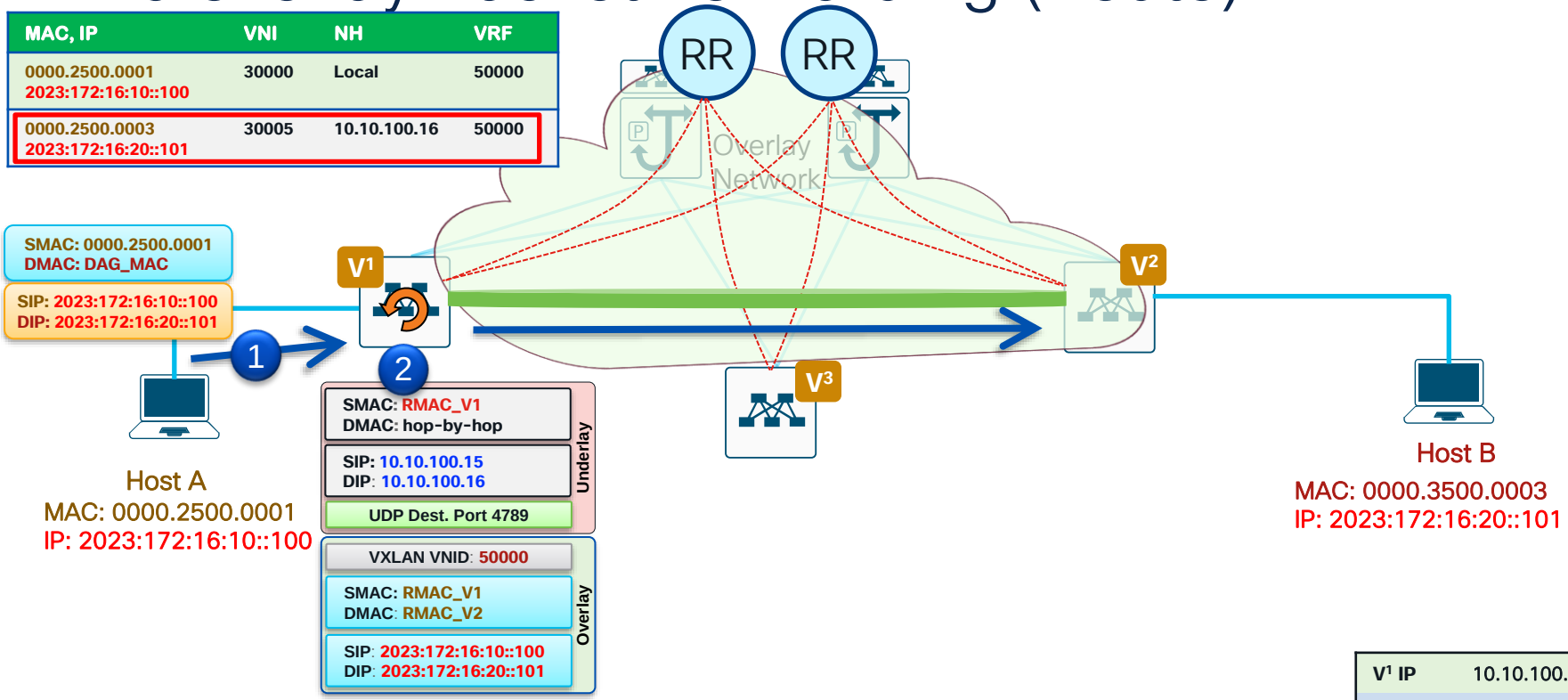

V¹ IP	10.10.100.15
V² IP	10.10.100.16
V³ IP	10.10.100.17

2 VTEP V1 will look up Host B's IP, MAC and VNI and know the packet needs to be routed. It encapsulates the frame with VNI 50000 and sends it to VTEP V2

© 2023 Cisco and/or its affiliates. All rights reserved. Cisco Public

IPv6 overlay Packet Forwarding (Route)

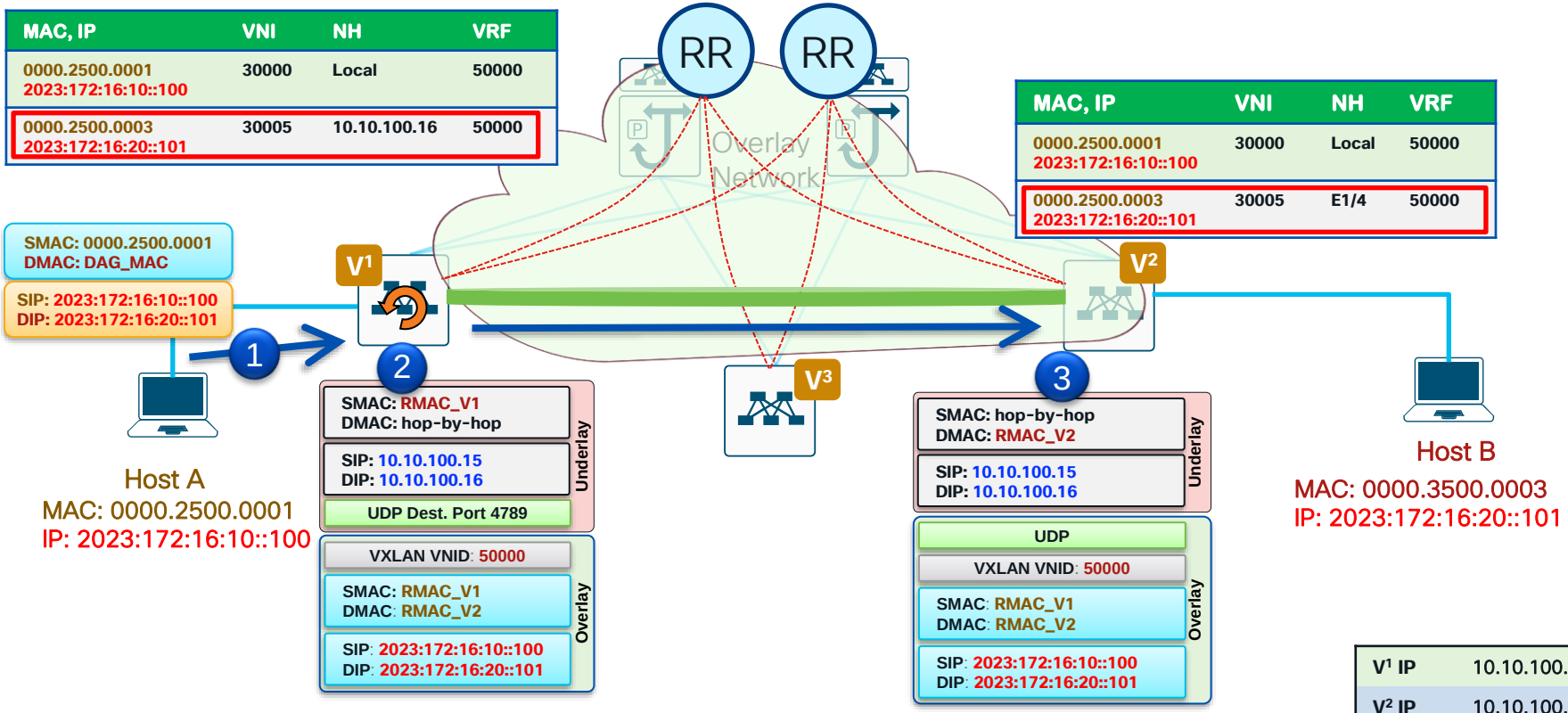

V¹ IP	10.10.100.15
V² IP	10.10.100.16
V³ IP	10.10.100.17

3 VTEP V2 looks up the Host B's IP and MAC address and knows where to send the packet to get to Host B

© 2023 Cisco and/or its affiliates. All rights reserved. Cisco Public

IPv6 overlay Packet Forwarding (Route)

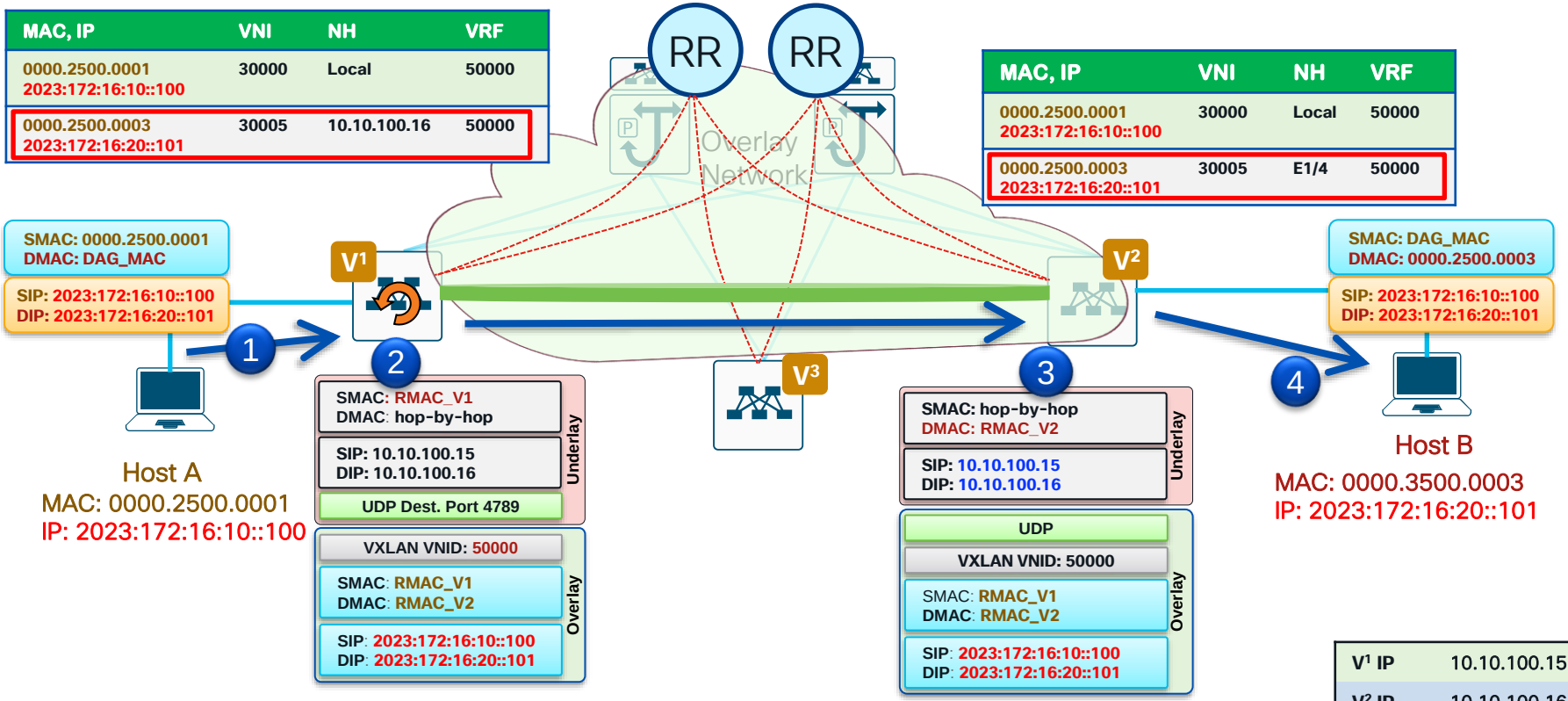

V¹ IP	10.10.100.15
V² IP	10.10.100.16
V³ IP	10.10.100.17

4 VTEP V2 then forwards the packet Host B in VNI 30005

© 2023 Cisco and/or its affiliates. All rights reserved. Cisco Public

Validating Routing Configs:
Underlay : IPv4
Overlay : IPv6

IPv6 in the Overlay with IPV4 in the underlay

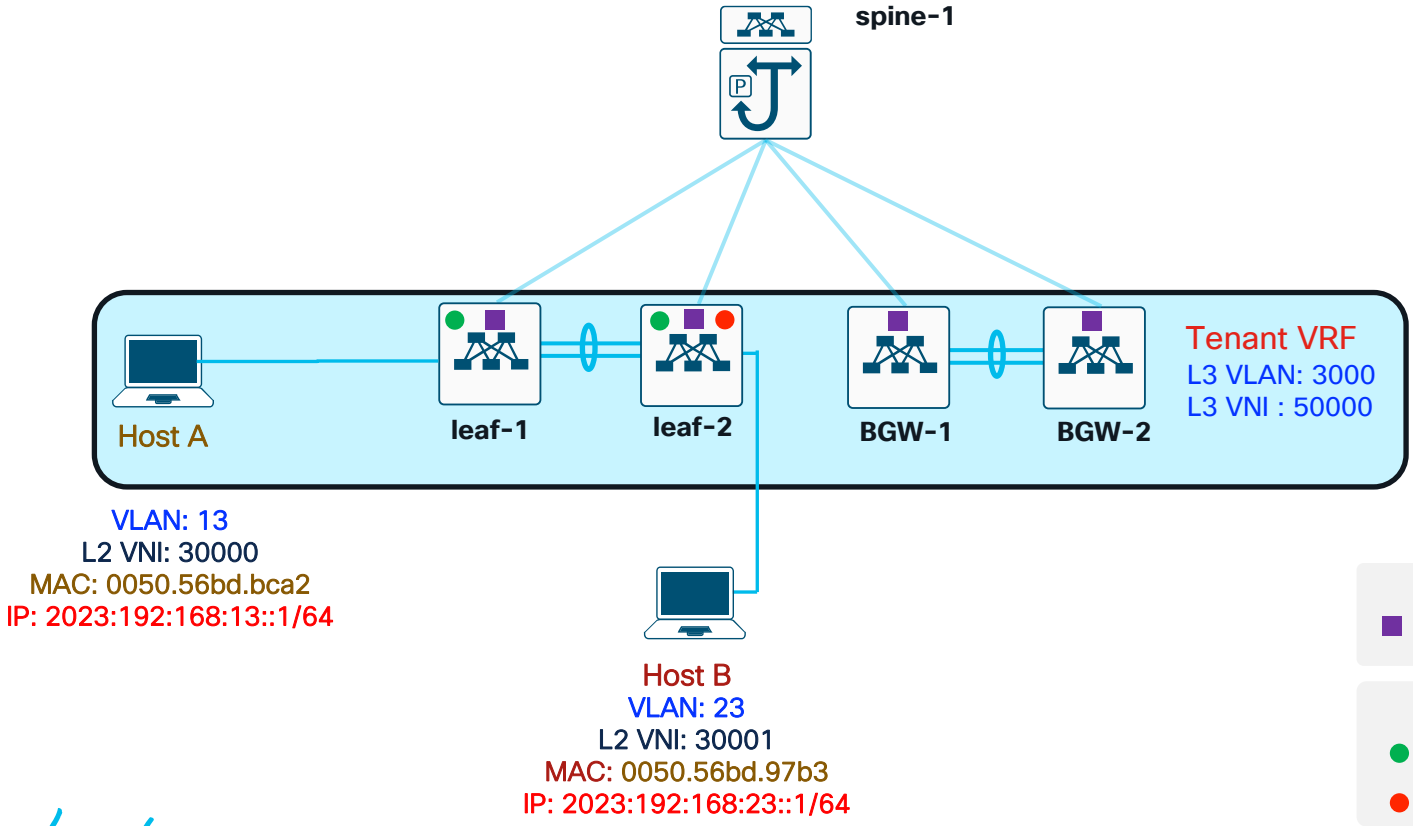

© 2023 Cisco and/or its affiliates. All rights reserved. Cisco Public

IPv6 Prefix Verification
Type -2 Route Validation

```
Leaf1# show l2route evpn mac-ip all detail
Topology     Mac Address      Host IP                 Prod    Flags    Seq No  Next-Hops
--------     --------------   ------------------      -----   ------   ------  ---------
   13        0050.56bd.bca2   192.168.13.1            HMM      L,        0     Local
             L3-Info: 50000
             Sent To: BGP
   13        0050.56bd.bca2   2023:192:168:13::1      HMM      L,        0     Local
             L3-Info: 50000
             Sent To: BGP
```


© 2023 Cisco and/or its affiliates. All rights reserved. Cisco Public

IPv6 Prefix Verification
Type -2 Route Validation

```
Leaf2# show l2route evpn mac-ip all detail

Topology  Mac Address      Host IP             Prod   Flags  Seq No   Next-Hops
--------  --------------   ---------------     -----  -----  -------  -----------------
  13      0050.56bd.bca2   192.168.13.1         BGP    --      0       10.4.1.1 (Label: 30000)
          encap-type:1
  13      0050.56bd.bca2   2023:192:168:13::1   BGP    --      0       10.4.1.1 (Label: 30000)
          encap-type:1
  23      0050.56bd.97b3   192.168.23.1         HMM    L,      0       Local
          L3-Info: 50000
          Sent To: BGP
  23      0050.56bd.97b3   2023:192:168:23::1   HMM    L,      0       Local
          L3-Info: 50000
          Sent To: BGP
```

leaf-1
VTEP (IPv4)

© 2023 Cisco and/or its affiliates. All rights reserved. Cisco Public

IPv6 Prefix verification
BGP EVPN Routes – Host A (VNI 30000)

```
Leaf2# show bgp l2vpn evpn vni-id 30000
BGP routing table information for VRF default, address family L2VPN EVPN
BGP table version is 39, Local Router ID is 10.4.0.5

   Network                Next Hop            Metric     LocPrf     Weight Path
Route Distinguisher: 10.4.0.5:32780    (L2VNI 30000)
*>i[2]:[0]:[0]:[48]:[0050.56bd.bca2]:[0]:[0.0.0.0]/216
                       10.4.1.1                               100          0 i
*>i[2]:[0]:[0]:[48]:[0050.56bd.bca2]:[32]:[192.168.13.1]/272
                       10.4.1.1                               100          0 i
*>i[2]:[0]:[0]:[48]:[0050.56bd.bca2]:[128]:[2023:192:168:13::1]/368
                       10.4.1.1                               100          0 i
```

leaf2 RID

32767+ 13 (vlan)

Leaf1 VTEP

© 2023 Cisco and/or its affiliates. All rights reserved. Cisco Public

IPv6 Prefix verification
BGP EVPN Routes – Host B (VNI 30001)

```
Leaf2# show bgp l2vpn evpn vni-id 30001
BGP routing table information for VRF default, address family L2VPN EVPN
BGP table version is 39, Local Router ID is 10.4.0.5

   Network          Next Hop            Metric     LocPrf     Weight Path
Route Distinguisher: 10.4.0.5:32790    (L2VNI 30001)
*>l[2]:[0]:[0]:[48]:[0050.56bd.97b3]:[0]:[0.0.0.0]/216
                     10.4.1.4                                  100      32768 i
*>l[2]:[0]:[0]:[48]:[0050.56bd.97b3]:[32]:[192.168.23.1]/272
                     10.4.1.4                                  100      32768 i
*>l[2]:[0]:[0]:[48]:[0050.56bd.97b3]:[128]:[2023:192:168:23::1]/368
                     10.4.1.4                                  100      32768 i
```

leaf2 RID

32767+ 23 (vlan)

Leaf2 VTEP

© 2023 Cisco and/or its affiliates. All rights reserved. Cisco Public

IPv6 Prefix Verification
VRF Tenant-1 – L3VNI (50000)

```
Leaf2# show bgp l2vpn evpn vrf tenant-1
BGP routing table information for VRF default, address family L2VPN EVPN
BGP table version is 39, Local Router ID is 10.4.0.5

Network                Next Hop            Metric     LocPrf     Weight Path
Route Distinguisher: 10.4.0.5:5    (L3VNI 50000)
*>i[2]:[0]:[0]:[48]:[0050.56bd.bca2]:[32]:[192.168.13.1]/272
                       10.4.1.1                 100          0 i
*>i[2]:[0]:[0]:[48]:[0050.56bd.bca2]:[128]:[2023:192:168:13::1]/368
                       10.4.1.1                 100          0 i
* i[5]:[0]:[0]:[24]:[192.168.13.0]/224
                       10.4.1.1               0  100          0 ?
*>l                    10.4.1.4               0  100      32768 ?
*>l[5]:[0]:[0]:[24]:[192.168.23.0]/224
                       10.4.1.4               0  100      32768 ?
*>l[5]:[0]:[0]:[64]:[2023:192:168:13::]/416
                       10.4.1.4               0  100      32768 ?
* i                    10.4.1.1               0  100          0 ?
*>l[5]:[0]:[0]:[64]:[2023:192:168:23::]/416
                       10.4.1.4               0  100      32768 ?
```


© 2023 Cisco and/or its affiliates. All rights reserved. Cisco Public

IPv6 Prefix Verification
Host Route Details – Host A (VNI 30000)

```
Leaf1# show bgp l2vpn evpn 2023:192:168:13::1
BGP routing table information for VRF default, address family L2VPN EVPN
Route Distinguisher: 10.4.0.1:32780    (L2VNI 30000)
BGP routing table entry for [2]:[0]:[0]:[48]:[0050.56bd.bca2]:[128]:[2023:192:168:13::1]/368,
version 30
Paths: (1 available, best #1)
Flags: (0x000102) (high32 00000000) on xmit-list, is not in l2rib/evpn

  Advertised path-id 1
  Path type: local, path is valid, is best path, no labeled nexthop
  AS-Path: NONE, path locally originated
    10.4.1.1 (metric 0) from 0.0.0.0 (10.4.0.1)
      Origin IGP, MED not set, localpref 100, weight 32768
      Received label 30000 50000
      Extcommunity: RT:65501:30000 RT:65501:50000 ENCAP:8 Router MAC:ac7a.56fc.ffd7

  Path-id 1 advertised to peers:
    10.4.0.3
```

Who gets this information

© 2023 Cisco and/or its affiliates. All rights reserved. Cisco Public

IPv6 Prefix Verification -1
Host Route Details – Host B (VNI 30001)

```
Leaf1# show bgp l2vpn evpn 2023:192:168:23::1

BGP routing table information for VRF default, address family L2VPN EVPN
Route Distinguisher: 10.4.0.5:32790
BGP routing table entry for [2]:[0]:[0]:[48]:[0050.56bd.97b3]:[128]:[2023:192:168:23::1]/368,
version 33
Paths: (1 available, best #1)
Flags: (0x000202) (high32 00000000) on xmit-list, is not in l2rib/evpn, is not in HW
  Advertised path-id 1
  Path type: internal, path is valid, is best path, no labeled nexthop
             Imported to 2 destination(s)
             Imported paths list: tenant-1 L3-50000
  AS-Path: NONE, path sourced internal to AS
    10.4.1.4 (metric 9) from 10.4.0.3 (10.4.0.3)
      Origin IGP, MED not set, localpref 100, weight 0
      Received label 30001 50000
      Extcommunity: RT:65501:30001 RT:65501:50000 ENCAP:8 Router MAC:ac7a.56fd.24f7
     Originator: 10.4.0.5 Cluster list: 10.4.0.3
```

Who gets this information

© 2023 Cisco and/or its affiliates. All rights reserved. Cisco Public

IPv6 Prefix Verification -2
Host Route Details – Host B (VNI 30001)

```
Route Distinguisher: 10.4.0.1:5    (L3VNI 50000)
BGP routing table entry for [2]:[0]:[0]:[48]:[0050.56bd.97b3]:[128]:[2023:192:168:23::1]/368,
version 34
Paths: (1 available, best #1)
Flags: (0x000202) (high32 00000000) on xmit-list, is not in l2rib/evpn, is not in HW

  Advertised path-id 1
  Path type: internal, path is valid, is best path, no labeled nexthop
             Imported from
10.4.0.5:32790:[2]:[0]:[0]:[48]:[0050.56bd.97b3]:[128]:[2023:192:168:23::1]/368
  AS-Path: NONE, path sourced internal to AS
    10.4.1.4 (metric 9) from 10.4.0.3 (10.4.0.3)
      Origin IGP, MED not set, localpref 100, weight 0
      Received label 30001 50000
      Extcommunity: RT:65501:30001 RT:65501:50000 ENCAP:8 Router MAC:ac7a.56fd.24f7
      Originator: 10.4.0.5 Cluster list: 10.4.0.3
```

Who gets this information

© 2023 Cisco and/or its affiliates. All rights reserved. Cisco Public

IPv6 Prefix Verification
MAC Address Table

```
Leaf1# show mac address-table
Legend:
        * - primary entry, G - Gateway MAC, (R) - Routed MAC, O - Overlay MAC
        age - seconds since last seen,+ - primary entry using vPC Peer-Link,
        (T) - True, (F) - False, C - ControlPlane MAC, ~ - vsan,
        (NA)- Not Applicable
   VLAN     MAC Address      Type      age     Secure NTFY Ports
---------+-----------------+--------+---------+------+----+------------------
*   13     0050.56bd.bca2   dynamic  NA        F      F    Eth1/2
G    -     2020.0000.00aa   static   -         F      F    sup-eth1(R)
G    -     ac7a.56fc.ffd7   static   -         F      F    sup-eth1(R)
G   13     ac7a.56fc.ffd7   static   -         F      F    sup-eth1(R)
G 3000     ac7a.56fc.ffd7   static   -         F      F    sup-eth1(R)
```


© 2023 Cisco and/or its affiliates. All rights reserved. Cisco Public

IPv6 Prefix Verification
MAC Address Table

```
Leaf2# show mac address-table
egend:
        * - primary entry, G - Gateway MAC, (R) - Routed MAC, O - Overlay MAC
        age - seconds since last seen,+ - primary entry using vPC Peer-Link,
        (T) - True, (F) - False, C - ControlPlane MAC, ~ - vsan,
        (NA)- Not Applicable

VLAN     MAC Address      Type      age   Secure NTFY Ports
---------+--------------- +-------+----+------+----+------------------
C    13    0050.56bd.bca2   dynamic   NA       F      F    nve1(10.4.1.1)
*    23    0050.56bd.97b3   dynamic   NA       F      F    Eth1/2
G     -    2020.0000.00aa   static    -        F      F    sup-eth1(R)
G     -    ac7a.56fd.24f7   static    -        F      F    sup-eth1(R)
G    13    ac7a.56fd.24f7   static    -        F      F    sup-eth1(R)
G    23    ac7a.56fd.24f7   static    -        F      F    sup-eth1(R)
G  3000    ac7a.56fd.24f7   static    -        F      F    sup-eth1(R)
```


© 2023 Cisco and/or its affiliates. All rights reserved. Cisco Public

IPv6 Prefix Verification
IPv6 Neighbor Discovery (~ARP)

```
Leaf1# show ipv6 neighbor vrf tenant-1 ← (show ip arp for ipv6)

IPv6 Adjacency Table for VRF tenant-1
Total number of entries: 2
Address                   Age       MAC Address     Pref Source    Interface  Mobility Flags
2023:192:168:13::1        02:54:41  0050.56bd.bca2   50  icmpv6    Vlan13
fe80::b6e0:1e7e:40f2:7b7c 02:54:35  0050.56bd.bca2   50  icmpv6    Vlan13
```

Link Local IPv6

```
Leaf2# show ipv6 neighbor vrf tenant-1

IPv6 Adjacency Table for VRF tenant-1
Total number of entries: 2
Address                   Age       MAC Address     Pref Source    Interface  Mobility Flags
2023:192:168:23::1        02:51:37  0050.56bd.97b3  50   icmpv6    Vlan23
fe80::b6e0:1e7e:40f2:7b7c 02:51:32  0050.56bd.97b3  50   icmpv6    Vlan23
```

Link Local IPv6

© 2023 Cisco and/or its affiliates. All rights reserved. Cisco Public

Considerations for deploying IPv6 Underlay

VXLAN IPv6 Guidelines

- Dual Stack (IPv4 and IPv6) is not supported for VXLAN underlay. It should either be IPv4 or IPv6, not both.
- NVE Source interface loopback for VTEP can either be IPv4 (VXLANv4) or IPv6 (VXLANv6), and not both
- For VXLAN with IPv6 in the Underlay supports IS-IS, OSPFv3 and eBGP
- Multicast in the underlay is not supported yet, instead Ingress replication is supported
- Next hop address in overlay (in bgp l2vpn evpn address family updates) should be resolved in underlay to the same address family. E.g.:

VTEP Address Family	BGP l2vpn evpn peering
IPv4 Address	Only over IPv4 Addresses
IPv6 Address	Only over IPv6 Addresses

© 2023 Cisco and/or its affiliates. All rights reserved. Cisco Public

vPC requirements for IPv6 Underlay
2 Loopbacks

- VXLAN with IPv4 underlay leveraged the concept of secondary IP address for the purpose of VIP. However, there is no concept of secondary IP address in IPv6.
- Primary IP address (PIP) and VIP need to be two separate loopback interfaces for IPv6 underlay.
- NVE CLI in IPv6 underlay to specify the loopback interface that carries the VIP in case of VXLANv6 vPC

```
interface loopback1 ← PIP
    ipv6 address 2001:db8:0:0:1:0:0:1/128
interface loopback10 ← VIP
    ipv6 address 2001:db8:0:0:1:0:0:2/128
interface nve1
    source-interface loopback1 anycast loopback10
```

- VTEP IP address cannot be a link local IPv6 address.
- Loopback1 and loopback10 should be valid /128 IPv6 Global Unicast Address

© 2023 Cisco and/or its affiliates. All rights reserved. Cisco Public

vPC requirements for IPv6 Underlay
vMAC

- vPC VTEPs use vMAC (virtual MAC) with the VIP/PIP feature
- vMAC is used with VIP and the system MAC is used with PIP
- By default, in a IPv6 underlay the vMAC is autogenerated by picking the last 48 bits from the IPv6 VIP
  - Autogenerated vMAC = 0x06 + the last 4 bytes of the IPv6 VIP address
- vMAC can also be manually configured and will be given precedence over autogenerated

```
interface nve1
    virtual-rmac <Unique 48-bit mac address>
```

- vMAC needs to be unique in the fabric

© 2023 Cisco and/or its affiliates. All rights reserved. Cisco Public

vPC requirements for IPv6 Underlay
Peer Keepalive

- vPC needs to allow IPv6 addresses to be used peer-keepalive links
- peer-keepalive must be a global unicast address
- The keepalive link becomes operational when when the peers have correctly configured IPv6 address, and they are reachable from each peer
- Peer-keepalive can be configured on the in-band or out-of-band interfaces

```
vpc domain 1
    peer-keepalive destination 2023:172:16:10::100 source 2023:172:16:10::101
vrf default
```


© 2023 Cisco and/or its affiliates. All rights reserved. Cisco Public

BGP requirements for IPv6 Underlay
BGP Underlay

- BGP IPv6 neighbor must support L2VPN EVPN address-family session
- BGP requires a 32-bit router id to be configured to identify the instance. this can any 32-bit integer. It is not used for routing
- With IPv6 in the undelay for VXLAN fabric, none of the interfaces have IPv4 addresses, the router ID will need to be manually configured to a 32-bit integer value

```
Router bgp 65001
    ! IPV4 Router ID
    router-id 2.2.2.2
    address-family ipv6 unicast
       redistribute direct route-map allow
```


© 2023 Cisco and/or its affiliates. All rights reserved. Cisco Public

Implementing IPv6 in the Underlay

IPv6 Underlay Configuration Steps

- Enable OSPFv3 /IS-IS/ feature for underlay routing
- Configure OSPFv3/ IS-IS in the underlay on all loopback and directly connected switch interfaces
- Configure IPv6 gateway address on the SVI and host.
- Configure IPv6 forwarding on the L3VNI VLANs
- Configure IPv6 for VRF and for VRF under BGP

© 2023 Cisco and/or its affiliates. All rights reserved. Cisco Public

IPv6 Underlay Configuration Steps

- Configure two separate loopback on each of the vPC switches; loopback1 (PIP) and Loopback10 (VIP)
- Ingress replication used instead of underlay Multicast under NVE interface config.
- Configure peer-keepalive configuration to support IPv6 addresses in the vPC domain (use loopback)

© 2023 Cisco and/or its affiliates. All rights reserved. Cisco Public

IPv6 Underlay Configuration -1

- Enable OSPFv3 / IS-IS feature for underlay routing
- Configure OSPFv3 / IS-IS and IPv6 routing in the underlay on all loopback and fabric switch interfaces

FEATURE OSPFV3

```
feature OSPFv3
ipv6 switch-packets lla
router ospfv3 UNDERLAY
  router-id 10.4.1.1
interface Ethernet1/1
ipv6 link-local use-bia
  ipv6 router ospfv3 UNDERLAY area 0.0.0.0
  no shutdown
```

LOOPBACK

```
interface loopback0
  description Routing loopback interface
  ipv6 address fd00::a02:0/128
  ipv6 router ospfv3 UNDERLAY area 0.0.0.0
interface loopback1
  description VTEP loopback interface
  ipv6 address fd00::a03:0/128
  ipv6 router ospfv3 UNDERLAY area 0.0.0.0
```


© 2023 Cisco and/or its affiliates. All rights reserved. Cisco Public

IPv6 Underlay Configuration -1

- Assign IPv6 address on L2VNI VLAN SVI and enable IPv6 forwarding on SVIs for L2/L3 VNI VLANs
- The IPv6 address “use-link-local-only” serves the same purpose as “ip forward” for IPv4

L2VNI

```
interface Vlan13
  no shutdown
  vrf member tenant-1
  ip address 192.168.13.254/24 tag 12345
  ipv6 address 2023:192:168:13::254/64 tag 12345
  fabric forwarding mode anycast-gateway
```

L3VNI

```
interface Vlan3000
  no shutdown
  mtu 9216
  vrf member tenant-1
  no ip redirects
  ip forward
  ipv6 address use-link-local-only
  no ipv6 redirects
```


© 2023 Cisco and/or its affiliates. All rights reserved. Cisco Public

IPv6 Underlay Configuration -2

- Configure IPv6 for VRF and for VRF under BGP

VRF CONFIG

```
vrf context tenant-1
  vni 50000
  rd auto
  address-family ipv4 unicast
    route-target both auto
    route-target both auto evpn
  address-family ipv6 unicast
    route-target both auto
    route-target both auto evpn
```

VRF CONFIG UNDER BGP

```
router bgp 65503
  vrf tenant-1
    address-family ipv4 unicast
      advertise l2vpn evpn
      redistribute <..> fabric-rmap-redist-subnet
      maximum-paths ibgp 2
    address-family ipv6 unicast
      advertise l2vpn evpn
      redistribute <..> fabric-rmap-redist-subnet
      maximum-paths ibgp 2
```


© 2023 Cisco and/or its affiliates. All rights reserved. Cisco Public

IPv6 Underlay Configuration -3

- Configure two separate loopback on each of the vPC switches; loopback1 (PIP) and Loopback10 (VIP). loopback10 shares the same IP on both vPC pair
- Configure Ingress replication for the L2 VNI that are on multiple leaf(s)
- Configure the loopback10 interfaces under NVE interface

VP VIP LOOPBACK

```
interface loopback10
  description Anycast loopback interface
  ipv6 address fd00::a03:1/128
  ipv6 router ospfv3 UNDERLAY area 0.0.0.0
```

NVE INTERFACE & LO10 IN L2 VNI

```
interface nve1
  no shutdown
  host-reachability protocol bgp
  source-interface loopback1 anycast loopback10
member vni 30000
    ingress-replication protocol bgp
  member vni 50000 associate-vrf
```


© 2023 Cisco and/or its affiliates. All rights reserved. Cisco Public

IPv6 Underlay Configuration -4

- Configure peer-keepalive configuration to support IPv6 addresses in the vPC domain
- Synchronize neighbor discovery (nd) between the vPC peers

VPC DOMAIN

```
vpc domain 1
  peer-switch
  peer-keepalive destination fd00::a02:0 source fd00::a02:2 vrf default
  delay restore 150
  peer-gateway
  auto-recovery reload-delay 360
  ipv6 nd synchronize
  ip arp synchronize
```


© 2023 Cisco and/or its affiliates. All rights reserved. Cisco Public

VXLAN IPv6 unicast routing in the Overlay with IPv6 Underlay

IPv6 VXLAN deployment the Data Center

The IPv6 packet is encapsulated in the overlay as IPv6 packets and uses IPv6 routing to transport the VXLAN encapsulated traffic.

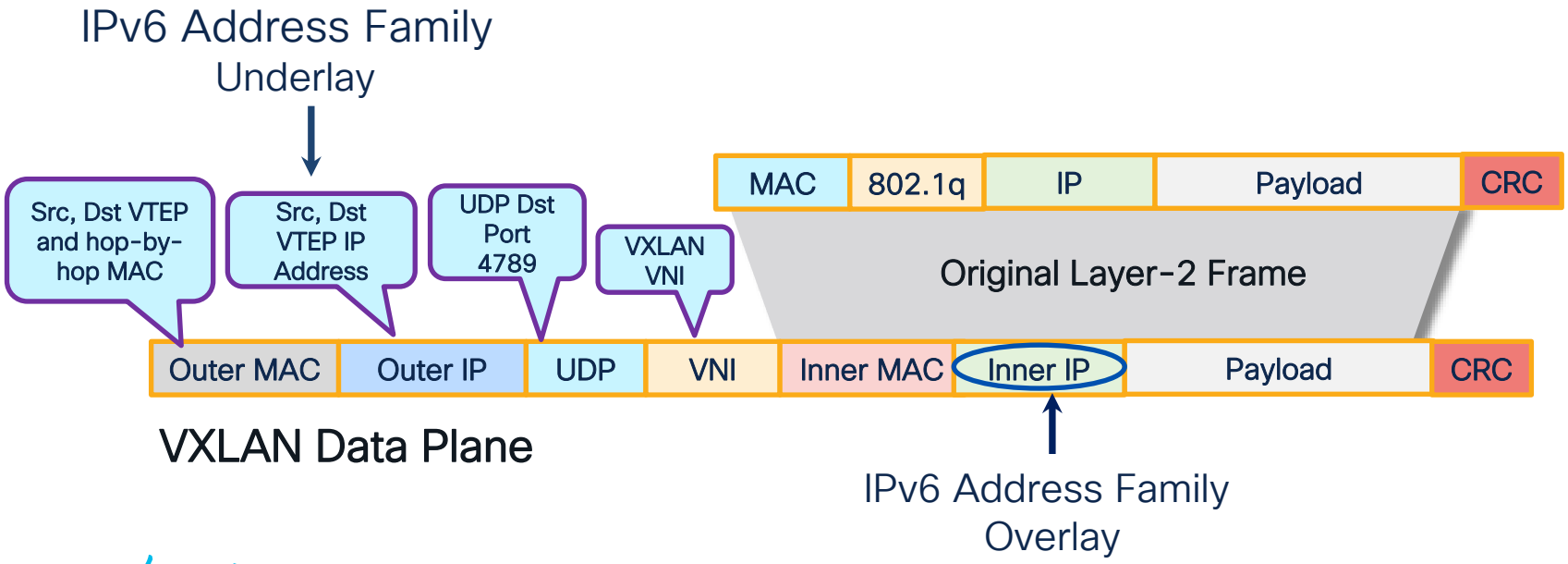

© 2023 Cisco and/or its affiliates. All rights reserved. Cisco Public

IPv6 overlay host route advertisement

Type	MAC/Length	L2VNI/RT	IP/Length	L3VNI /RT	Netx-Hop	SEQ.
2	0000.2500.0001 /48	2500, 65500:2500	2023:172:16:10::100/128	5000,65500:5000	2003:10:10:100::15	
2	0000.2500.0002 /48	2500, 65500:2500	2023:172:16:10::101/128	5000,65500:5000	2003:10:10:100::16	
2	0000.3000.0003 /48	3000, 65500:3000	2023:172:16:20::100/128	5000,65500:5000	2003:10:10:100::18	

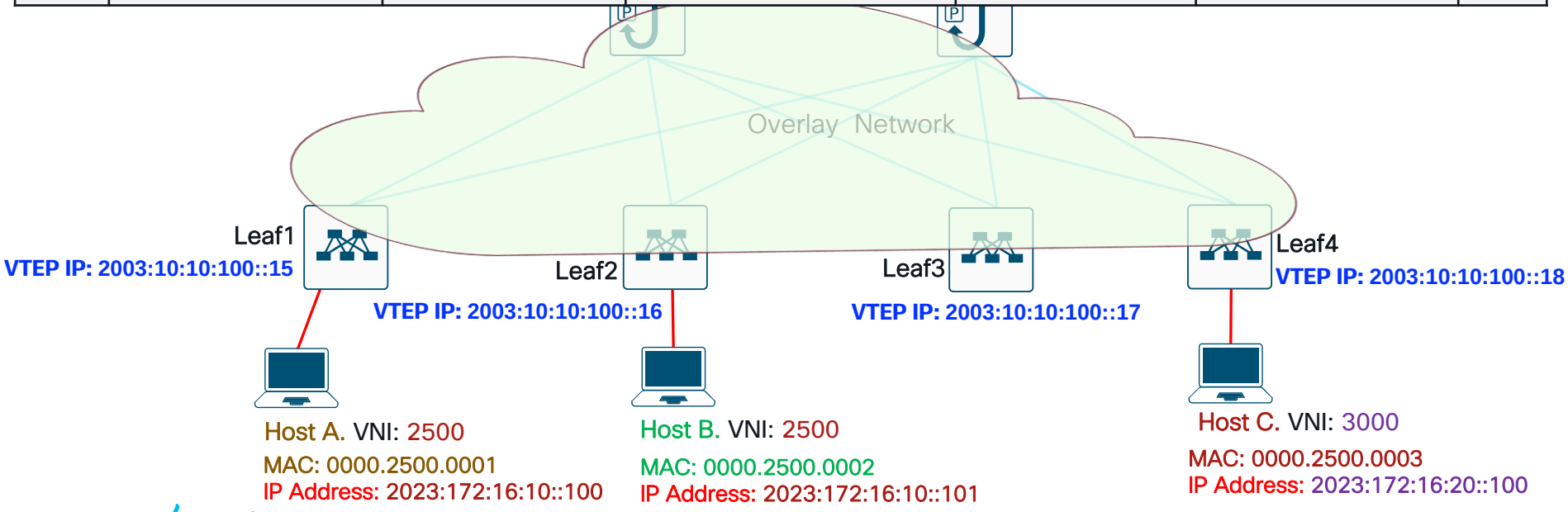

© 2023 Cisco and/or its affiliates. All rights reserved. Cisco Public

IPv6 overlay Packet Forwarding (Route)

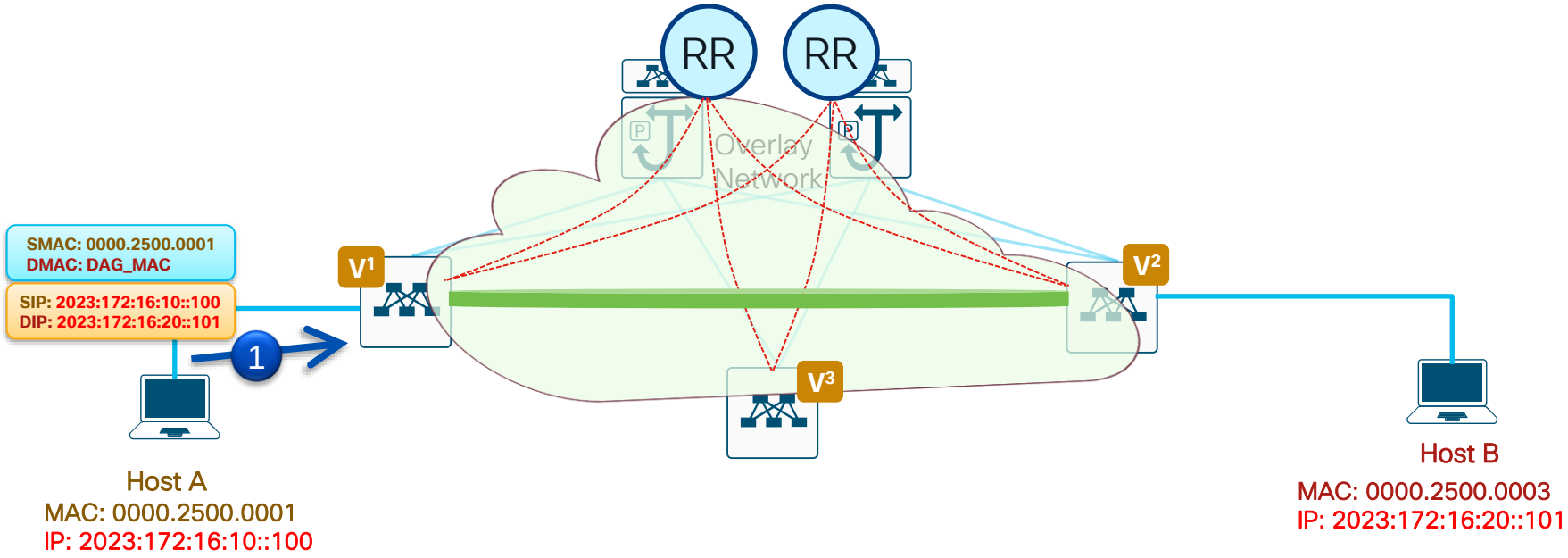

1 Host A needs to send packets to Host B sends it to VTEP V1

V1 IP	2003:10:10:100::15
V2 IP	2003:10:10:100::16
V3 IP	2003:10:10:100::17

© 2023 Cisco and/or its affiliates. All rights reserved. Cisco Public

IPv6 overlay Packet Forwarding

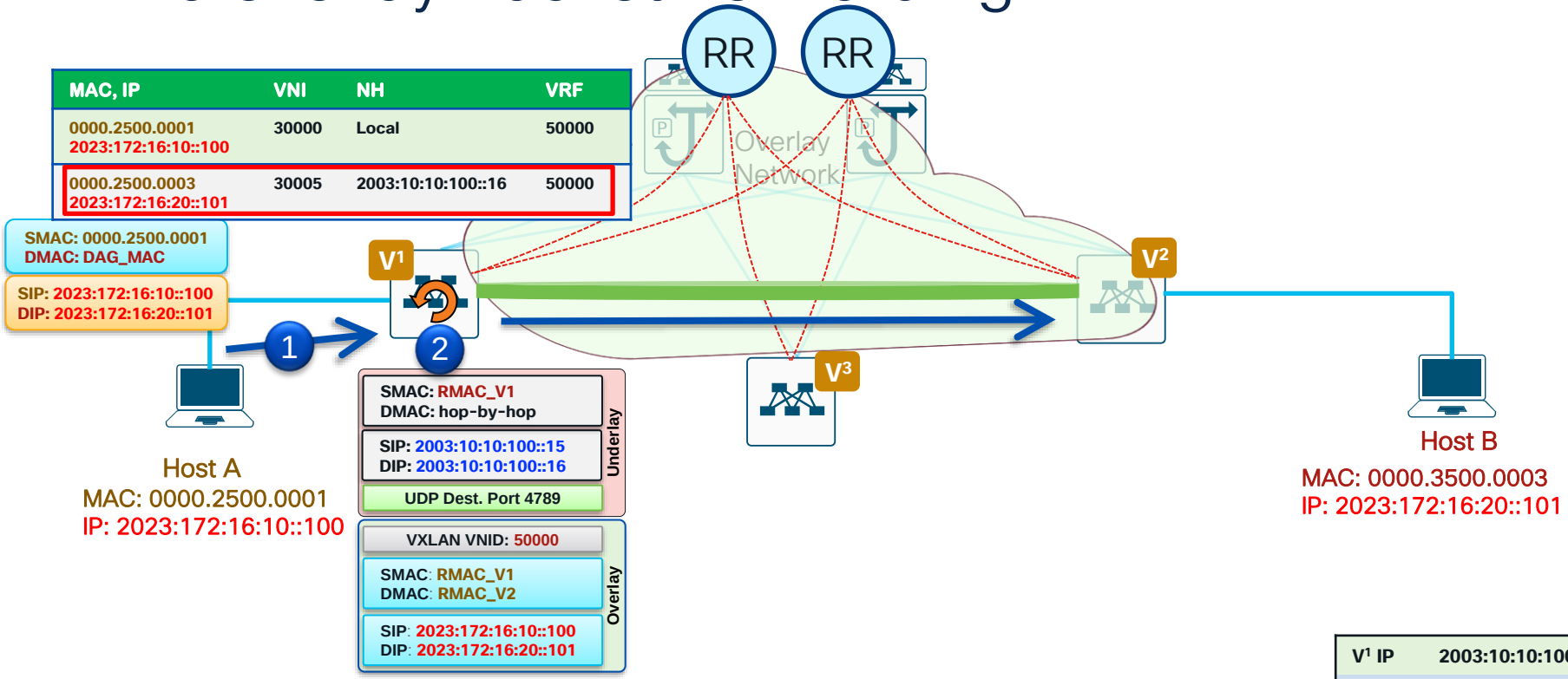

MAC, IP	VNI	NH	VRF
0000.2500.0001 2023:172:16:10::100	30000	Local	50000
0000.2500.0003 2023:172:16:20::101	30005	2003:10:10:100::16	50000

V¹ IP	2003:10:10:100::15
V² IP	2003:10:10:100::16
V³ IP	2003:10:10:100::17

2 VTEP V1 knows Host B's IP Subnet and VNI and know the packet needs to be routed. It encapsulates the frame with VNID 50000 and sends it to VTEP V2

© 2023 Cisco and/or its affiliates. All rights reserved. Cisco Public

IPv6 overlay Packet Forwarding (Route)

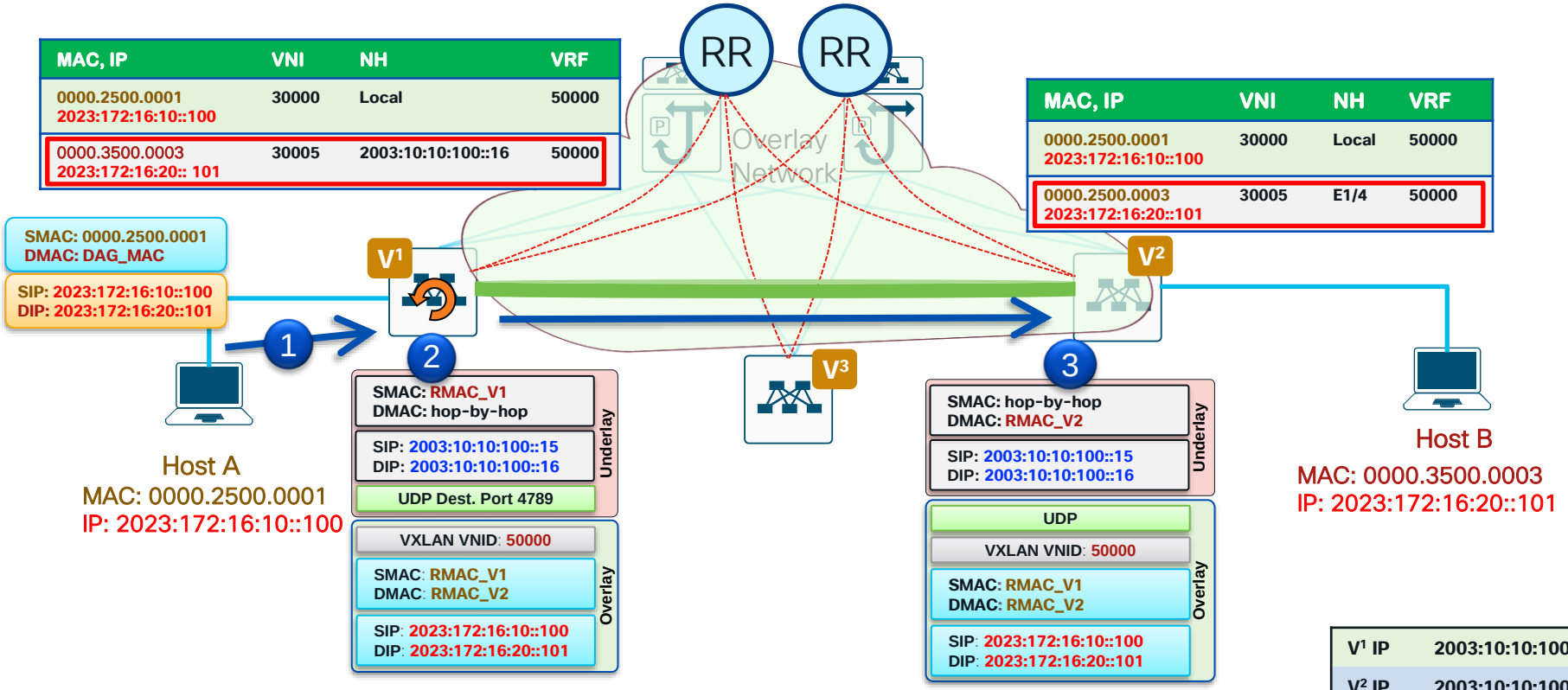

V1 IP	2003:10:10:100::15
V2 IP	2003:10:10:100::16
V3 IP	2003:10:10:100::17

3 VTEP V2 looks up the Host B's IP and MAC address and knows where to send the packet to get to Host B

© 2023 Cisco and/or its affiliates. All rights reserved. Cisco Public

IPv6 overlay Packet Forwarding (Route)

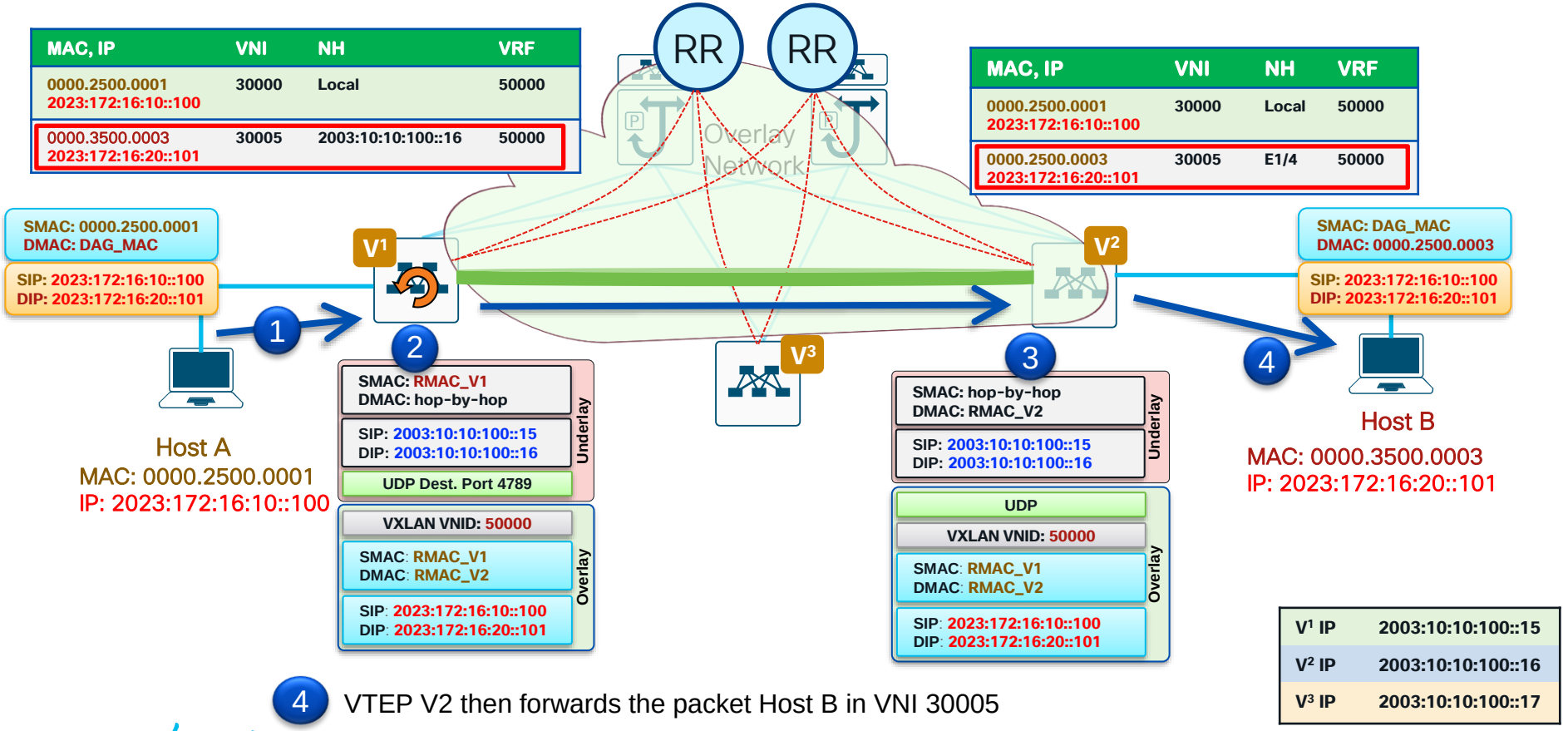

4 VTEP V2 then forwards the packet Host B in VNI 30005

© 2023 Cisco and/or its affiliates. All rights reserved. Cisco Public

Validating IPv6 routing in the Overlay

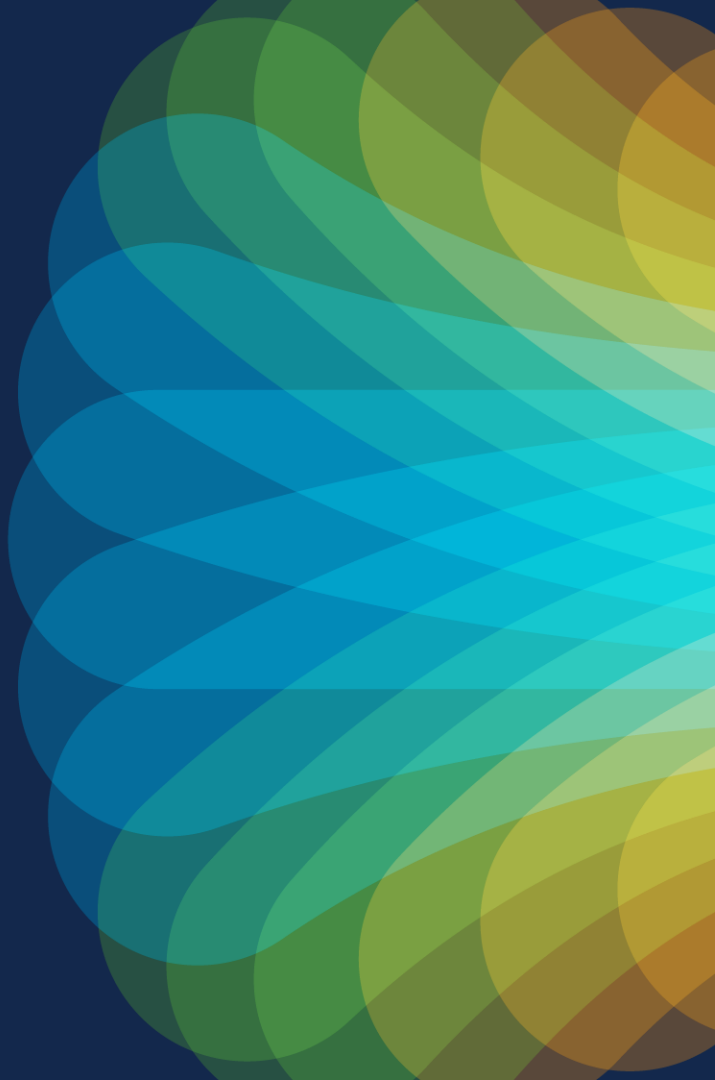

IPv6 in the overlay with IPV6 in the underlay

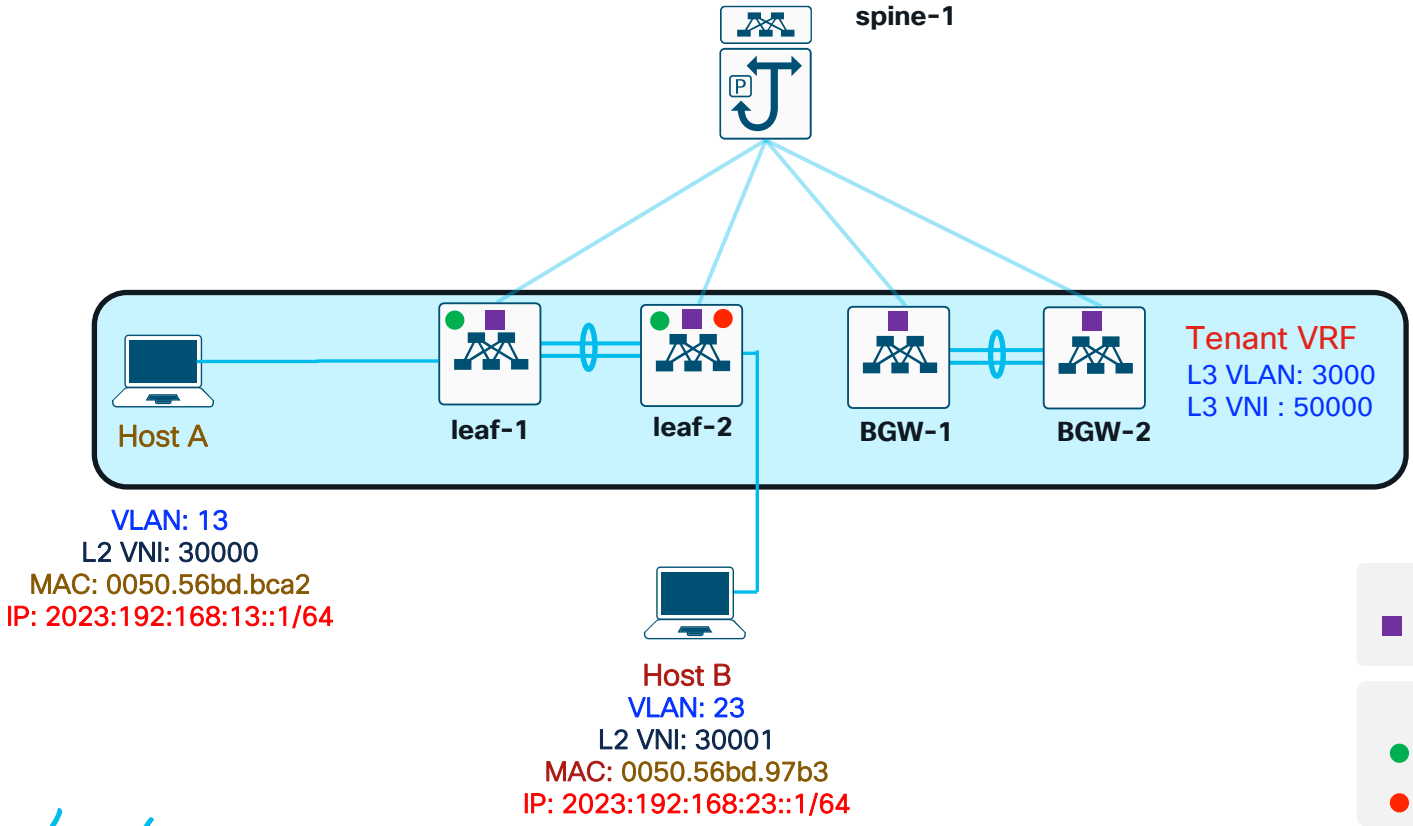

© 2023 Cisco and/or its affiliates. All rights reserved. Cisco Public

IPv6 Prefix Verification
Type -2 Route Validation

```
Leaf1# show l2route evpn mac-ip all detail
Topology     Mac Address      Host IP                 Prod    Flags    Seq No  Next-Hops
--------     --------------   ------------------      -----   ------   ------  ---------
   13        0050.56bd.bca2   192.168.13.1            HMM      L,        0     Local
             L3-Info: 50000
             Sent To: BGP
   13        0050.56bd.bca2   2023:192:168:13::1      HMM      L,        0     Local
             L3-Info: 50000
             Sent To: BGP
```


© 2023 Cisco and/or its affiliates. All rights reserved. Cisco Public

IPv6 Prefix Verification
Type -2 Route Validation

```
Leaf2# show l2route evpn mac-ip all detail

Topology  Mac Address      Host IP             Prod   Flags  Seq No   Next-Hops
--------  --------------   ---------------     -----  -----  -------  -----------------
  13      0050.56bd.bca2   192.168.13.1         BGP    --      0       fd00::a03:0 (Label: 30000)
          encap-type:1
  13      0050.56bd.bca2   2023:192:168:13::1   BGP    --      0       fd00::a03:0 (Label: 30000)
          encap-type:1
  23      0050.56bd.97b3   192.168.23.1         HMM    L,      0       Local
          L3-Info: 50000
          Sent To: BGP
  23      0050.56bd.97b3   2023:192:168:23::1   HMM    L,      0       Local
          L3-Info: 50000
          Sent To: BGP
```

Leaf-1
VTEP (IPv6)

© 2023 Cisco and/or its affiliates. All rights reserved. Cisco Public

IPv6 Prefix Verification
Ingress Replication - Route Type 3 on Leaf1

```
Leaf1# show bgp l2vpn evpn vni-id 30000
BGP routing table information for VRF default, address family L2VPN EVPN
BGP table version is 20, Local Router ID is 10.4.1.1

   Network                Next Hop              Metric     LocPrf     Weight Path
Route Distinguisher: 10.4.1.1:32780    (L2VNI 30000)
*>l[2]:[0]:[0]:[48]:[0050.56bd.bca2]:[0]:[0.0.0.0]/216
                       fd00::a03:0                            100      32768 i
*>l[2]:[0]:[0]:[48]:[0050.56bd.bca2]:[128]:[2023:192:168:13::1]/368
                       fd00::a03:0                            100      32768 i
*>l[3]:[0]:[128]:[fd00::a03:0]/184
                       fd00::a03:0                            100      32768 i
*>i[3]:[0]:[128]:[fd00::a03:3]/184
                       fd00::a03:3                            100          0 i
```

IR Route Type

Leaf-1 VTEP

Leaf-2 VTEP

© 2023 Cisco and/or its affiliates. All rights reserved. Cisco Public

IPv6 Prefix Verification
Ingress Replication - Route Type 3 on Leaf2

```
Leaf2# show bgp l2vpn evpn vni-id 30000
BGP routing table information for VRF default, address family L2VPN EVPN
BGP table version is 22, Local Router ID is 10.4.1.5

   Network                Next Hop              Metric     LocPrf     Weight Path
Route Distinguisher: 10.4.1.5:32780    (L2VNI 30000)
*>i[2]:[0]:[0]:[48]:[0050.56bd.bca2]:[0]:[0.0.0.0]/216
                       fd00::a03:0                            100          0 i
*>i[2]:[0]:[0]:[48]:[0050.56bd.bca2]:[128]:[2023:192:168:13::1]/368
                       fd00::a03:0                            100          0 i
*>i[3]:[0]:[128]:[fd00::a03:0]/184
                       fd00::a03:0                            100          0 i
*>l[3]:[0]:[128]:[fd00::a03:3]/184
                       fd00::a03:3                            100      32768 i
```

IR Route Type

Leaf-1 VTEP

Leaf-2 VTEP

© 2023 Cisco and/or its affiliates. All rights reserved. Cisco Public

IPv6 Prefix Verification
VRF Tenant-1 – L3VNI (50000)

```
Leaf1# show bgp l2vpn evpn vrf tenant-1
BGP routing table information for VRF default, address family L2VPN EVPN
BGP table version is 20, Local Router ID is 10.4.1.1
   Network              Next Hop            Metric     LocPrf     Weight Path
Route Distinguisher: 10.4.1.1:7    (L3VNI 50000)
*>i[2]:[0]:[0]:[48]:[0050.56bd.97b3]:[128]:[2023:192:168:23::1]/368
                      fd00::a03:3                      100          0 i
* i[5]:[0]:[0]:[24]:[192.168.13.0]/224
                      fd00::a03:3              0       100          0 ?
*>l                   fd00::a03:0              0       100      32768 ?
*>i[5]:[0]:[0]:[24]:[192.168.23.0]/224
                      fd00::a03:3              0       100          0 ?
* i[5]:[0]:[0]:[64]:[2023:192:168:13::]/416
                      fd00::a03:3              0       100          0 ?
*>l                   fd00::a03:0              0       100      32768 ?
*>i[5]:[0]:[0]:[64]:[2023:192:168:23::]/416
                      fd00::a03:3              0       100          0 ?
```

Leaf-2 VTEP

Leaf-1 VTEP

© 2023 Cisco and/or its affiliates. All rights reserved. Cisco Public

IPv6 Prefix Verification – 1
Ingress Replication - Route Type 3 Detailed

```
Leaf1# show bgp l2vpn evpn route-type 3
BGP routing table information for VRF default, address family L2VPN EVPN
Route Distinguisher: 10.4.1.1:32780    (L2VNI 30000)
BGP routing table entry for [3]:[0]:[128]:[fd00::a03:0]/184, version 14
Paths: (1 available, best #1)
Flags: (0x000002) (high32 00000000) on xmit-list, is not in l2rib/evpn
  Advertised path-id 1
  Path type: local, path is valid, is best path, no labeled nexthop, is extd
  AS-Path: NONE, path locally originated
    fd00::a03:0 (metric 0) from 0:: (10.4.1.1)
      Origin IGP, MED not set, localpref 100, weight 32768
      Extcommunity: RT:65503:30000 ENCAP:8
      PMSI Tunnel Attribute:
        flags: 0x00, Tunnel type: Ingress Replication
        Label: 30000, Tunnel Id: fd00::a03:0
```

Who gets this information

© 2023 Cisco and/or its affiliates. All rights reserved. Cisco Public

IPv6 Prefix Verification – 2
Ingress Replication - Route Type 3 Detailed

```
BGP routing table entry for [3]:[0]:[128]:[fd00::a03:3]/184, version 16
Paths: (1 available, best #1)
Flags: (0x000012) (high32 00000000) on xmit-list, is in l2rib/evpn, is not in HW

  Advertised path-id 1
  Path type: internal, path is valid, is best path, no labeled nexthop
             Imported from 10.4.1.5:32780:[3]:[0]:[128]:[fd00::a03:3]/184
  AS-Path: NONE, path sourced internal to AS
    fd00::a03:3 (metric 8) from fd00::a02:2 (10.4.1.3)
      Origin IGP, MED not set, localpref 100, weight 0
      Extcommunity: RT:65503:30000 ENCAP:8
      Originator: 10.4.1.5 Cluster list: 10.4.1.3
      PMSI Tunnel Attribute:
        flags: 0x00, Tunnel type: Ingress Replication
        Label: 30000, Tunnel Id: fd00::a03:3
```

Who gets this information

© 2023 Cisco and/or its affiliates. All rights reserved. Cisco Public

IPv6 Prefix Verification
Host Route Details – Host A (VNI 30000)

```
Leaf1# show bgp l2vpn evpn 2023:192:168:13::1

BGP routing table information for VRF default, address family L2VPN EVPN

Route Distinguisher: 10.4.1.1:32780    (L2VNI 30000)

BGP routing table entry for [2]:[0]:[0]:[48]:[0050.56bd.bca2]:[128]:[2023:192:168:13::1]/368,
version 19

Paths: (1 available, best #1)

Flags: (0x000102) (high32 00000000) on xmit-list, is not in l2rib/evpn


  Advertised path-id 1
  Path type: local, path is valid, is best path, no labeled nexthop

  AS-Path: NONE, path locally originated
    fd00::a03:0 (metric 0) from 0:: (10.4.1.1)

      Origin IGP, MED not set, localpref 100, weight 32768

      Received label 30000 50000

      Extcommunity: RT:65503:30000 RT:65503:50000 ENCAP:8 Router MAC:ac7a.56fc.ffd7
```

Who all get this information

© 2023 Cisco and/or its affiliates. All rights reserved. Cisco Public

IPv6 Prefix Verification
Host Route Details – Host B (VNI 30001)

```
Leaf1# show bgp l2vpn evpn 2023:192:168:23::1
BGP routing table information for VRF default, address family L2VPN EVPN
Route Distinguisher: 10.4.1.5:32790
BGP routing table entry for [2]:[0]:[0]:[48]:[0050.56bd.97b3]:[128]:[2023:192:168:23::1]/368,
version 20
Paths: (1 available, best #1)
Flags: (0x000202) (high32 00000000) on xmit-list, is not in l2rib/evpn, is not in HW

  Advertised path-id 1
  Path type: internal, path is valid, is best path, no labeled nexthop
             Imported to 2 destination(s)
             Imported paths list: tenant-1 L3-50000
  AS-Path: NONE, path sourced internal to AS
    fd00::a03:3 (metric 8) from fd00::a02:2 (10.4.1.3)
      Origin IGP, MED not set, localpref 100, weight 0
      Received label 30001 50000
      Extcommunity: RT:65503:30001 RT:65503:50000 ENCAP:8 Router MAC:ac7a.56fd.24f7
      Originator: 10.4.1.5 Cluster list: 10.4.1.3
```

Leaf-2 VTEP

Spine-1 RID

Who Gets this information

Route Reflector (Spine)

Source

© 2023 Cisco and/or its affiliates. All rights reserved. Cisco Public

IPv6 Prefix Verification
IPv6 Route table for VRF Tenant-1

```
Leaf1# sh ipv6 route vrf tenant-1

IPv6 Routing Table for VRF "tenant-1"
'*' denotes best ucast next-hop
'**' denotes best mcast next-hop
'[x/y]' denotes [preference/metric]

2023:192:168:13::/64, ubest/mbest: 1/0, attached
    *via 2023:192:168:13::254, Vlan13, [0/0], 04:19:43, direct, , tag 12345
2023:192:168:13::1/128, ubest/mbest: 1/0, attached
    *via 2023:192:168:13::1, Vlan13, [190/0], 04:16:49, hmm
2023:192:168:13::254/128, ubest/mbest: 1/0, attached
    *via 2023:192:168:13::254, Vlan13, [0/0], 04:19:43, local, tag 12345
2023:192:168:23::/64, ubest/mbest: 1/0
    *via fd00::a03:3/128%default, [200/0], 04:21:27, bgp-65503, internal, tag 65503,
segid 50000 VTEP:(fd00::a03:3, underlay_vrf: 1) encap: VXLAN

2023:192:168:23::1/128, ubest/mbest: 1/0
    *via fd00::a03:3/128%default, [200/0], 04:16:18, bgp-65503, internal, tag 65503,
segid 50000 VTEP:(fd00::a03:3, underlay_vrf: 1) encap: VXLAN
```


© 2023 Cisco and/or its affiliates. All rights reserved. Cisco Public

IPv6 Prefix Verification
MAC Address Table

```
Leaf1# show mac address-table
Legend:
        * - primary entry, G - Gateway MAC, (R) - Routed MAC, O - Overlay MAC
        age - seconds since last seen,+ - primary entry using vPC Peer-Link,
        (T) - True, (F) - False, C - ControlPlane MAC, ~ - vsan,
        (NA)- Not Applicable
   VLAN     MAC Address      Type      age     Secure NTFY Ports
---------+-----------------+--------+---------+------+----+------------------
*   13     0050.56bd.bca2   dynamic  NA         F      F    Eth1/2
G    -     2020.0000.00aa   static   -          F      F    sup-eth1(R)
G    -     ac7a.56fc.ffd7   static   -          F      F    sup-eth1(R)
G   13     ac7a.56fc.ffd7   static   -          F      F    sup-eth1(R)
G 3000     ac7a.56fc.ffd7   static   -          F      F    sup-eth1(R)
```


© 2023 Cisco and/or its affiliates. All rights reserved. Cisco Public

IPv6 Prefix Verification
MAC Address Table

```
Leaf2# show mac address-table
Legend:
        * - primary entry, G - Gateway MAC, (R) - Routed MAC, O - Overlay MAC
        age - seconds since last seen,+ - primary entry using vPC Peer-Link,
        (T) - True, (F) - False, C - ControlPlane MAC, ~ - vsan,
        (NA)- Not Applicable
   VLAN     MAC Address      Type      age     Secure NTFY Ports
---------+-----------------+--------+---------+------+----+------------------
C    13     0050.56bd.bca2   dynamic  NA         F      F    nve1(fd00::a03:0)
*    23     0050.56bd.97b3   dynamic  NA         F      F    Eth1/2
G     -     2020.0000.00aa   static   -          F      F    sup-eth1(R)
G     -     ac7a.56fd.24f7   static   -          F      F    sup-eth1(R)
G    13     ac7a.56fd.24f7   static   -          F      F    sup-eth1(R)
G    23     ac7a.56fd.24f7   static   -          F      F    sup-eth1(R)
G  3000     ac7a.56fd.24f7   static   -          F      F    sup-eth1(R)
```


© 2023 Cisco and/or its affiliates. All rights reserved. Cisco Public

IPv6 Prefix Verification
IPv6 Neighbor Discovery (~ARP)

```
Leaf1# show ipv6 neighbor vrf tenant-1 ← (show ip arp for ipv6)

IPv6 Adjacency Table for VRF tenant-1
Total number of entries: 2
Address                   Age       MAC Address     Pref Source    Interface  Mobility Flags
2023:192:168:13::1        02:54:41  0050.56bd.bca2   50  icmpv6    Vlan13
fe80::b6e0:1e7e:40f2:7b7c 02:54:35  0050.56bd.bca2   50  icmpv6    Vlan13
```

Link Local IPv6

```
Leaf2# show ipv6 neighbor vrf tenant-1

IPv6 Adjacency Table for VRF tenant-1
Total number of entries: 2
Address                   Age       MAC Address     Pref Source    Interface  Mobility Flags
2023:192:168:23::1        02:51:37  0050.56bd.97b3   50  icmpv6    Vlan23
fe80::b6e0:1e7e:40f2:7b7c 02:51:32  0050.56bd.97b3   50  icmpv6    Vlan23
```

Link Local IPv6

© 2023 Cisco and/or its affiliates. All rights reserved. Cisco Public

Conclusion

Fill out your session surveys!

Attendees who fill out a minimum of four session surveys and the overall event survey will get **Cisco Live-branded socks** (while supplies last)!

Attendees will also earn 100 points in the **Cisco Challenge** for every survey completed.

These points help you get on the leaderboard and increase your chances of winning daily and grand prizes

© 2023 Cisco and/or its affiliates. All rights reserved. Cisco Public

Continue your education

- Visit the Cisco Showcase for related demos
- Book your one-on-one Meet the Engineer meeting
- Attend the interactive education with DevNet, Capture the Flag, and Walk-in Labs
- Visit the On-Demand Library for more sessions at www.CiscoLive.com/on-demand

© 2023 Cisco and/or its affiliates. All rights reserved. Cisco Public

The bridge to possible

Thank you

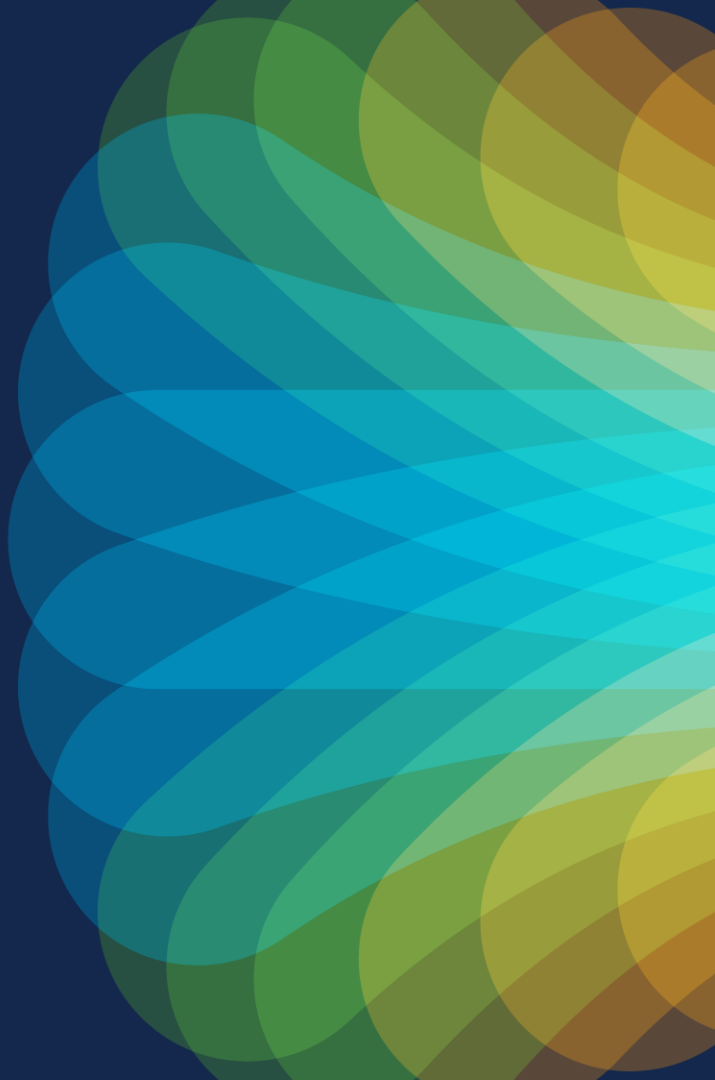

Cisco Live
Challenge

Gamify your Cisco Live experience!

Get points for attending this session!

How:

1. Open the Cisco Events App.
2. Click on 'Cisco Live Challenge' in the side menu.
3. Click on View Your Badges at the top.
4. Click the + at the bottom of the screen and scan the QR code:

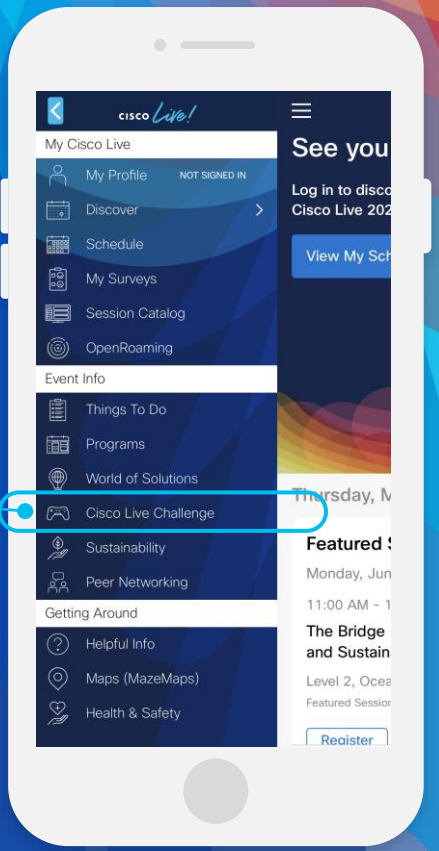

cisco Live!

© 2023 Cisco and/or its affiliates. All rights reserved. Cisco Public

cisco Live!
Let's go
#CiscoLive

Apendix

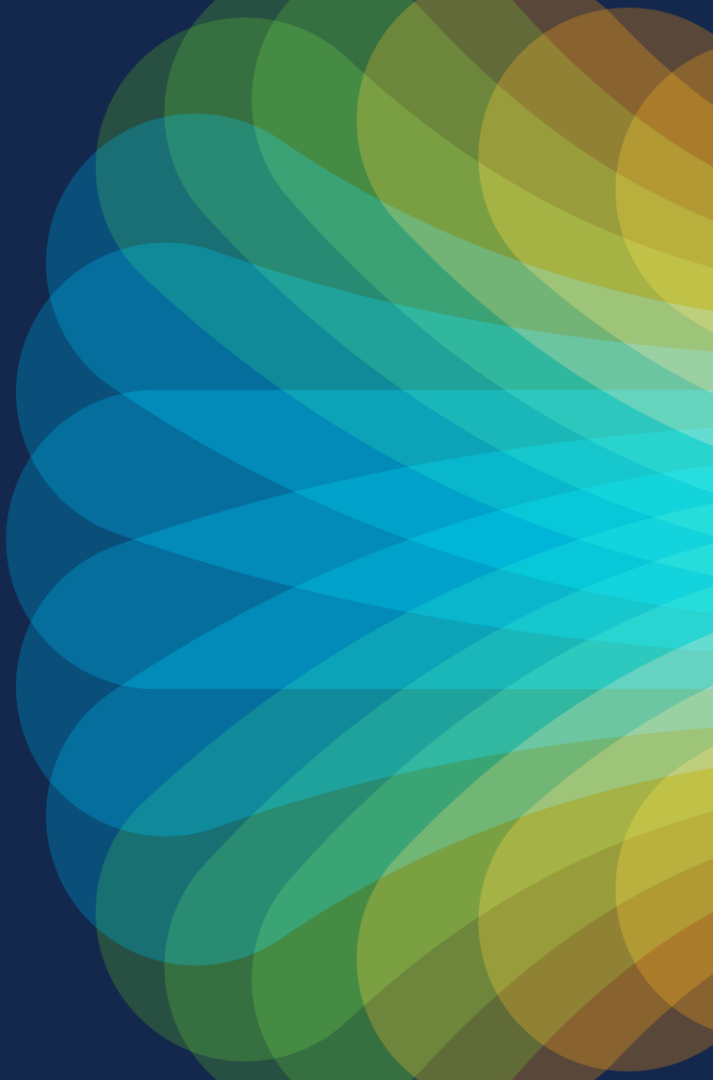

Features supported with IPv6v In Underlay

- Cisco Nexus Dashboard Fabric Controller (NDFC) integration
- Address Resolution Protocol (ARP) suppression in the overlay
- Access Control List (ACL) Quality of Service (QoS)
- Border Node with VRF-Lite
- Dynamic Host Configuration Protocol (DHCP)
- Internet Group Management Protocol (IGMP) Snooping in the overlay
- Virtual Extensible Local Area Network (VXLAN) Operation, Administration, and Maintenance (OAM)

© 2023 Cisco and/or its affiliates. All rights reserved. Cisco Public

Features supported with IPv6v In Underlay

- Virtual Port Channel (vPC) with VIP and PIP support
- VXLAN Policy-Based Routing (PBR)
- vPC Fabric Peering
- Storm Control for host ports (Access Side)
- VXLAN Access Features

Private VLAN (PVLAN)	802.1x
Port Security	Port VLAN Translation
QinVNI	SelQinVNI
QinQ QinVNI	

© 2023 Cisco and/or its affiliates. All rights reserved. Cisco Public

Features not supported (yet) with IPv6 Underlay

- EVPN Multi-homing with Ethernet Segment (ES)
- VXLAN Flood and Learn
- Multicast underlay (PIM-BiDir, Protocol Independent Multicast (PIM) Any Source Multicast (ASM), Snooping)
- Tenant Routed Multicast (TRM)
- VXLAN Multi-Site
- Downstream VNI

© 2023 Cisco and/or its affiliates. All rights reserved. Cisco Public

Features not supported (yet) with IPv6 Underlay

- Bidirectional Forwarding Detection (BFD)
- Centralized Route Leak
- NetFlow
- Peer vtep command
- Virtual Network Functions (VNF) Multipath

© 2023 Cisco and/or its affiliates. All rights reserved. Cisco Public

Underlay Network Protocols
Multicast Protocol

Device Role	Interface	Protocol	Function
Spine	Loopback254	PIM v2/PIM v6	Router RP
Spine, Leaf	Loopback0	PIM v2/PIM v6	Router ID
Leaf	Loopback1	PIM v2/PIM v6	NVE Source Int
Spine, Leaf	Fabric Interface	PIM v2/PIM v6	Switch Peering
Leaf (vPC)	vPC backup SVI	PIM v2/PIM v6	vPC peer link routing

© 2023 Cisco and/or its affiliates. All rights reserved. Cisco Public