```
module lab_support_system (
    input clk,
    input rst,
    input service_done,
    input vlsi_req,
    input embedded_req,
    input comm_req,
    input power_req,
    output reg vlsi_led,
    output reg embedded_led,
    output reg comm_led,
    output reg power_led,
    output reg system_busy
);
    reg [3:0] pending;
    reg [3:0] next_pending;
    reg [1:0] current_lab;
    reg [1:0] next_lab;
    wire [3:0] lab_req;
    assign lab_req = {power_req, comm_req, embedded_req, vlsi_req};
    always @(posedge clk or posedge rst) begin
        if (rst) begin
            pending <= 4'b0000;
            current_lab <= 2'b00;
        end else begin
            pending <= next_pending;
            current_lab <= next_lab;
        end
    end
    always @(*) begin
        next_pending = pending | lab_req;
if (service_done) begin
            case (current_lab)
                2'b00: next_pending[0] = 0;
                2'b01: next_pending[1] = 0;
                2'b10: next_pending[2] = 0;
                2'b11: next_pending[3] = 0;
            endcase
        end
 casex(next_pending)
            4'b1xxx: next_lab = 2'b11;  // Power
            4'b01xx: next_lab = 2'b10;  // Comm
            4'b001x: next_lab = 2'b01;  // Embedded
            4'b0001: next_lab = 2'b00;  // VLSI
            default: next_lab = current_lab;
        endcase
    end
always @(*) begin
        vlsi_led     = 0;
        embedded_led = 0;
        comm_led     = 0;
        power_led    = 0;
        system_busy  = 0;
        if (pending != 4'b0000) begin
            system_busy = 1;
            case (current_lab)
                2'b00: vlsi_led     = 1;
                2'b01: embedded_led = 1;
                2'b10: comm_led     = 1;
                2'b11: power_led    = 1;
            endcase
        end
    end
endmodule
```

```
`timescale 1ns / 1ps
module lab_support_system_tb;
    reg clk;
    reg rst;
    reg service_done;
    reg vlsi_req;
    reg embedded_req;
    reg comm_req;
    reg power_req;
    wire vlsi_led;
    wire embedded_led;
    wire comm_led;
    wire power_led;
    wire system_busy;

    lab_support_system uut (
        .clk(clk),
        .rst(rst),
        .service_done(service_done),
        .vlsi_req(vlsi_req),
        .embedded_req(embedded_req),
        .comm_req(comm_req),
        .power_req(power_req),
        .vlsi_led(vlsi_led),
        .embedded_led(embedded_led),
        .comm_led(comm_led),
        .power_led(power_led),
        .system_busy(system_busy)
    );
    always #5 clk = ~clk;
    initial begin
        clk = 0;
        rst = 1;
        service_done = 0;
        vlsi_req = 0;
        embedded_req = 0;
        comm_req = 0;
        power_req = 0;
        #20 rst = 0;
        #20 vlsi_req = 1;
        #20 vlsi_req = 0;
        #40 service_done = 1; #10 service_done = 0;
        #20 embedded_req = 1;
        #20 embedded_req = 0;
        #40 service_done = 1; #10 service_done = 0;
        #20 vlsi_req = 1; power_req = 1;
        #20 vlsi_req = 0; power_req = 0;
        #40 service_done = 1; #10 service_done = 0;
        #40 service_done = 1; #10 service_done = 0;
        #20 embedded_req = 1;
            comm_req = 1;
            power_req = 1;
        #20 embedded_req = 0;
            comm_req = 0;
            power_req = 0;
        #40 service_done = 1; #10 service_done = 0;
        #40 service_done = 1; #10 service_done = 0;
        #40 service_done = 1; #10 service_done = 0;
        #20 embedded_req = 1;
        #20 power_req = 1;
        #20 embedded_req = 0; power_req = 0;
        #40 service_done = 1; #10 service_done = 0;
        #40 service_done = 1; #10 service_done = 0;
        #100 $stop;
    end
endmodule
```

```
## Clock (100 MHz)
set_property PACKAGE_PIN W5 [get_ports clk]
set_property IOSTANDARD LVCMOS33 [get_ports clk]
create_clock -period 10.0 [get_ports clk]

## Reset Button (BTN0)
set_property PACKAGE_PIN U18 [get_ports rst]
set_property IOSTANDARD LVCMOS33 [get_ports rst]

## Service Done Button (BTN1)
set_property PACKAGE_PIN T18 [get_ports service_done]
set_property IOSTANDARD LVCMOS33 [get_ports service_done]

## Switches
set_property PACKAGE_PIN V17 [get_ports vlsi_req]
set_property IOSTANDARD LVCMOS33 [get_ports vlsi_req]

set_property PACKAGE_PIN V16 [get_ports embedded_req]
set_property IOSTANDARD LVCMOS33 [get_ports embedded_req]

set_property PACKAGE_PIN W16 [get_ports comm_req]
set_property IOSTANDARD LVCMOS33 [get_ports comm_req]

set_property PACKAGE_PIN W17 [get_ports power_req]
set_property IOSTANDARD LVCMOS33 [get_ports power_req]

## LEDs
set_property PACKAGE_PIN W18 [get_ports vlsi_led]
set_property IOSTANDARD LVCMOS33 [get_ports vlsi_led]

set_property PACKAGE_PIN U15 [get_ports embedded_led]
set_property IOSTANDARD LVCMOS33 [get_ports embedded_led]

set_property PACKAGE_PIN U14 [get_ports comm_led]
set_property IOSTANDARD LVCMOS33 [get_ports comm_led]

set_property PACKAGE_PIN V14 [get_ports power_led]
set_property IOSTANDARD LVCMOS33 [get_ports power_led]

## Busy LED (LED15)
set_property PACKAGE_PIN L1 [get_ports system_busy]
set_property IOSTANDARD LVCMOS33 [get_ports system_busy]
```

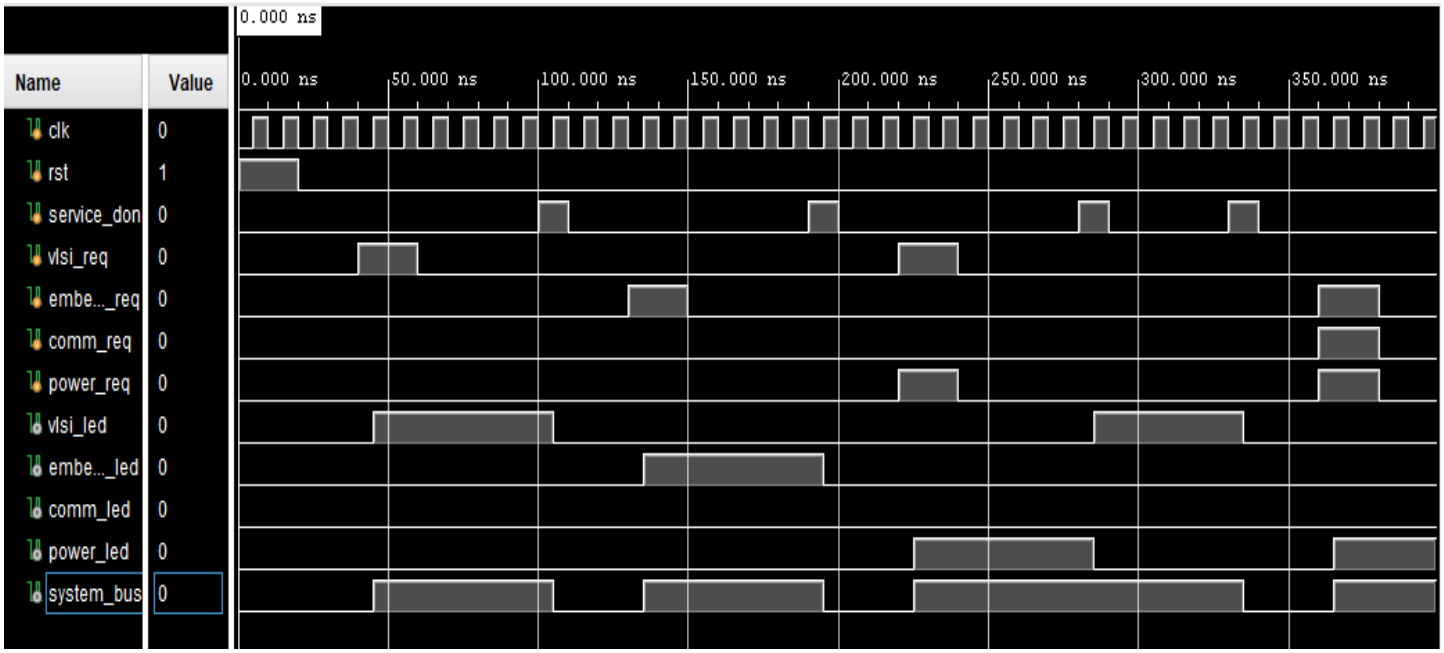

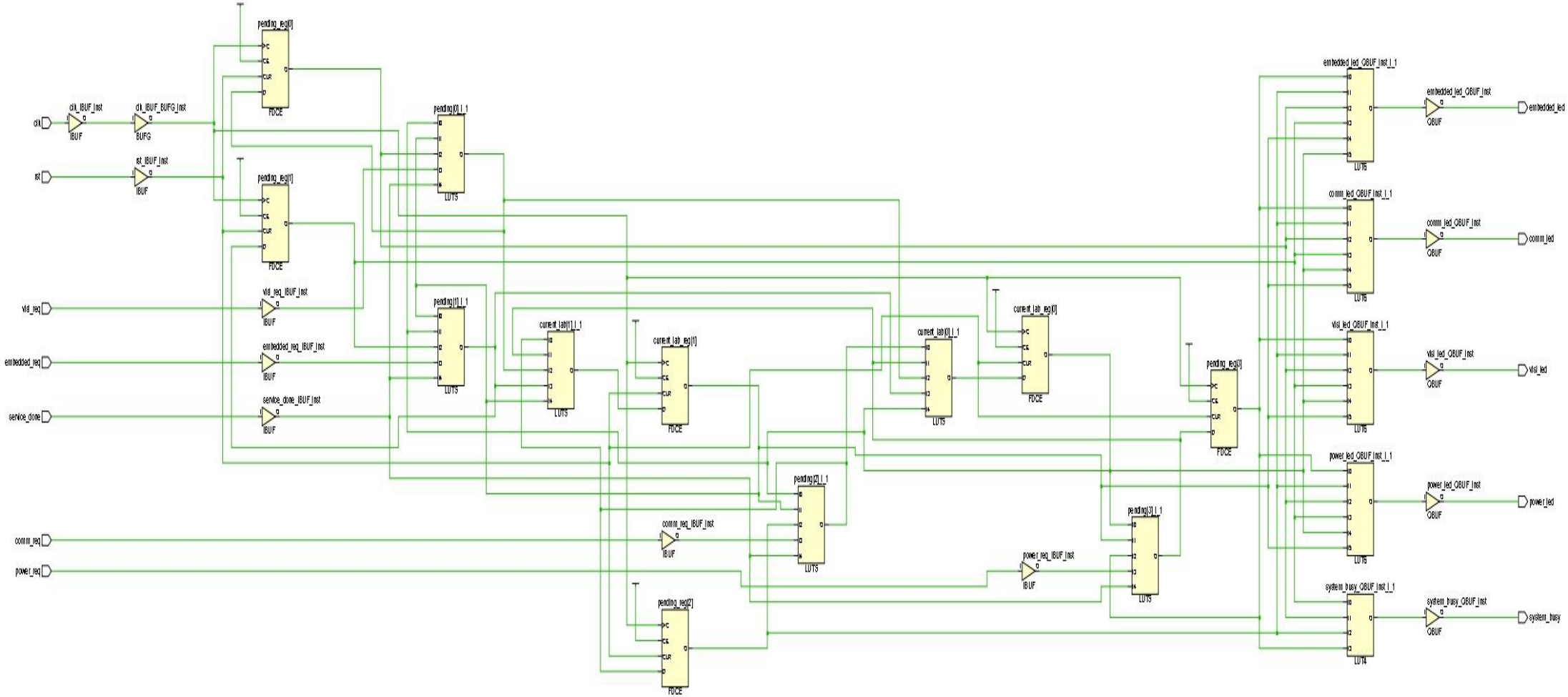
clk
rst
vis_req
embedded_req
service_done
comm_req
power_req
clk_IBUF_inst
IBUF
clk_IBUF_BUFG_inst
BUFG
rst_IBUF_inst
IBUF
vis_req_IBUF_inst
IBUF
embedded_req_IBUF_inst
IBUF
service_done_IBUF_inst
IBUF
comm_req_IBUF_inst
IBUF
power_req_IBUF_inst
IBUF
pending_reg[0]
FDCE
pending_reg[1]
FDCE
pending_reg[2]
FDCE
pending_reg[3]
FDCE
pending[0]_i_1
LUT5
pending[1]_i_1
LUT5
pending[2]_i_1
LUT5
pending[3]_i_1
LUT5
current_lab[1]_i_1
LUT5
current_lab[1]
FDCE
current_lab[0]_i_1
LUT5
current_lab[0]
FDCE
embedded_led_OBUF_inst_i_1
LUT6
embedded_led_OBUF_inst
OBUF
embedded_led
comm_led_OBUF_inst_i_1
LUT6
comm_led_OBUF_inst
OBUF
comm_led
vis_led_OBUF_inst_i_1
LUT6
vis_led_OBUF_inst
OBUF
vis_led
power_led_OBUF_inst_i_1
LUT6
power_led_OBUF_inst
OBUF
power_led
system_busy_OBUF_inst_i_1
LUT4
system_busy_OBUF_inst
OBUF
system_busy