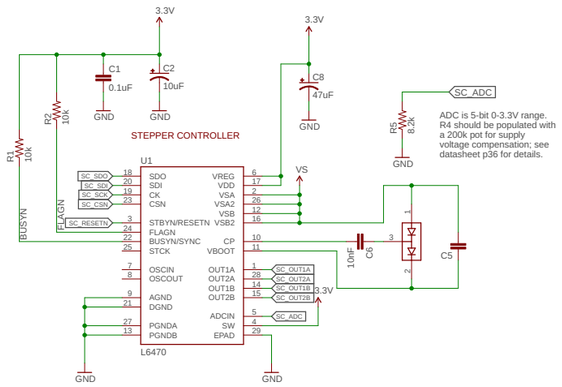

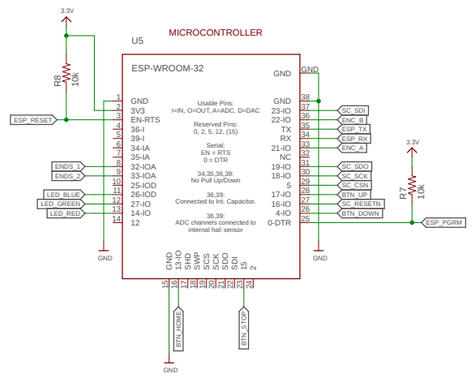

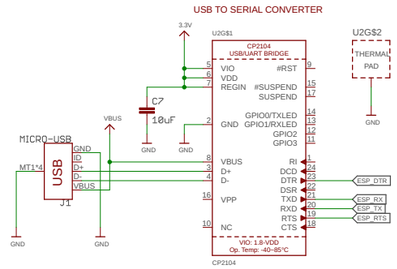

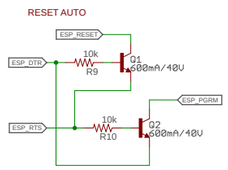

IAD LOGO
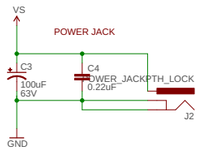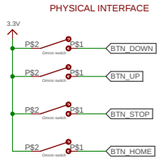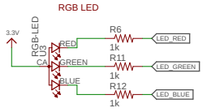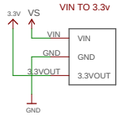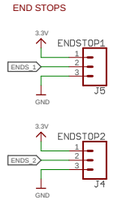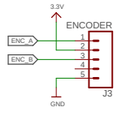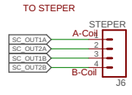
Interface