Fe-NVSim: An Extended NVSim for Emerging FeFET-based Embeded Memory Simulation

Kai Chen[1], Junfeng Tan[1], Bo Li[1*], Xiguang Wu[1], Kai Xiong[1], Hongrui Zhang[1], Bing Chen[1*], Yan Liu[2], Genquan Han[1]
1 Hangzhou Institute of Technology, Xidian University, Hangzhou, China.
2 School of Microelectronics, Xidian University, Xi'an, China.
∗ Corresponding authors (E-mail: {libo, chenbing }@xidian.edu.cn)

2025 International Symposium of Electronics Design Automation (ISEDA) | 979-8-3315-3696-1/25/$31.00 ©2025 IEEE | DOI: 10.1109/ISEDA65950.2025.11100795

***Abstract*—Ferroelectric field effect transistors (FeFETs) exhibit significant potential in emerging non-volatile memory (NVM) applications. There is an increasing need to evaluate and explore the design space of FeFET-based memory. However, FeFET are not well supported in current simulation tools such as NVSim and DRAMsim3 due to the unique properties of FeFET. In this paper, we present a comprehensive implementation methods to estimate the area, energy consumption and latency of multiple FeFET memory cell to extend the functionality of the circuit-aware simulator NVSim. In addition, it enables the unique performance estimation of multi-level FeFET memory arrays and the memory window under different ferroelectric materials and ferroelectric layer structures. The effectiveness and reliability of Fe-NVSim have been simulated and discussed. Fe-NVSim is anticipated to facilitate FeFET memory circuit design.**

***Index Terms*—FeFET, circuit-level evaluation, memory window, memory cells**

I. Introduction

In the era of intelligent computing, data-intensive applications impose significant demands on the energy efficiency, density, and performance of on-chip storage [1]. The slowdown in CMOS scaling has raised concerns, driving increased attention toward "post-silicon" devices in solid-state electronics. Recent advancements in non-volatile memories (NVMs), such as spin-transfer torque magnetic RAM (STT-MRAM) [2], resistive RAM (RRAM) [3], phase-change memory (PCM) [4], and ferroelectric field-effect transistors (FeFETs) [5], have introduced new opportunities. These technologies offer fast read/write speeds, high density, and non-volatility, meeting the requirements of data-intensive applications.

Among these, RRAM, STT-MRAM, and PCM are resistive devices that generate high direct currents during write operations, leading to substantial write energy consumption (typically in the picojoule range or higher) and relatively low on/off ratios. In contrast, FeFETs exhibit significantly lower write energy (˜10 fJ), moderate write speeds (<10 ns) [6], and high on/off ratios. Recent studies have demonstrated FeFETs achieving write speeds below 5 ns [7], highlighting their potential for future storage applications.

This work was supported in part by the National Key R&D Program of China (grant 2022ZD0119002), the Fundamental Research Funds for the Central Universities (grant XJSJ24101).

Existing simulation and evaluation tools, such as NVSim [8], DRAMsim3 [9] and NVSim-VX^s [10], are designed to verify power, area, and latency characteristics of memory architectures under various design specifications. These tools aid designers in optimizing memory systems. However, there is a lack of circuit-level evaluation tools for FeFET-based memories, necessitating a dedicated tool to simulate and optimize FeFET memory cells and circuits.

This work extends the NVSim framework by introducing new modeling algorithms and modules to evaluate FeFET memory arrays in terms of area, energy, read/write latency, and memory window. The key innovations of this study are summarized as follows:

1) The tool enables the evaluation of latency, area, and energy consumption for random-access memory based on 1T AND FeFET and 1T NOR FeFET, as well as flash memory based on NAND FeFET
2) It supports the assessment of latency, area, and energy consumption for memory arrays utilizing 1T AND MLC FeFET with multi-level cell (2-bit) storage capabilities
3) The tool provides an approximate estimation of the memory window(MW) for FeFETs employing different ferroelectric materials and ferroelectric layer architectures.

The rest of the paper is organized as follows. Section II briefly overviews FeFET-based memory and NVSim In Section III we discuss and implement the FeFET memory cell structure and write/read operation for behavior estimation. And a comprehensive evaluation method for FeFET-based memory is presented in Section IV. The simulated results are reported and discussed in Section V. Section VI concludes the paper.

II. Background

A. FeFET-based Non-volatile Memory

FeFET memory stores data non-volatilely by adjusting the transistor's threshold voltage through controlled ferroelectric polarization under varying gate voltage, and reads data by measuring the channel current. FeFET also exhibits rich electrostatic properties and high CMOS compatibility.This makes FeFET promising for important applications in non-volatile memory and in-memory computing.

Authorized licensed use limited to: University of Pennsylvania. Downloaded on March 22,2026 at 17:47:39 UTC from IEEE Xplore. Restrictions apply.

B. NVSim circuit-aware Simulator

NVSim [8], a widely adopted simulation framework, is designed to model and evaluate the performance of NVM architectures. It provides a comprehensive platform for analyzing key metrics—including area, latency, energy consumption, and endurance—across diverse NVM technologies such as STT-MRAM, ReRAM, and PCM. The framework integrates modules for memory array modeling, peripheral circuitry simulation, and performance evaluation. This work will subsequently elaborate on how to develop Fe-NVSim based on NVSim and FeFET.

III. Implementation of Fefet Memory Cells and Read/Write Operation

The code logic schematic and memory architecture diagram of Fe-NVSim are illustrated in Fig.1(a) and Fig.1(b), respectively. The framework adopts an H-tree structure that incorporates diverse FeFET-based memory cell types. Built upon the core framework of NVSim, Fe-NVSim supports modeling of multiple FeFET-based memory array configurations. Leveraging the read/write schemes of individual storage cells, it introduces novel performance estimation methodologies, while further incorporating the MW assessment algorithm specifically tailored for FeFET characteristics. The specific storage array and read/write scheme will be elaborated in this sections.

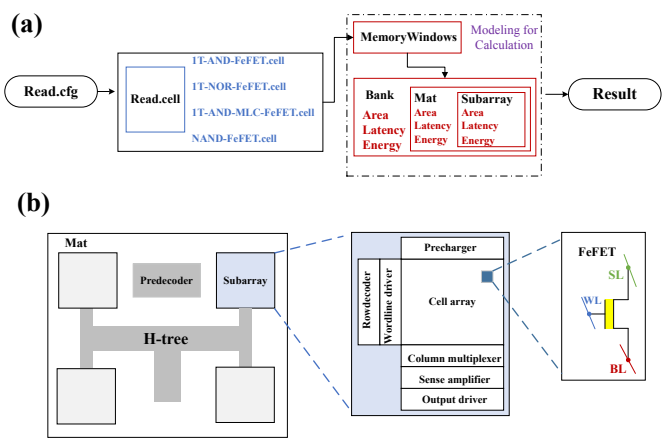

Fig. 1. (a) Code logic schematic(b) Memory architecture diagram of Fe-NVSim

A. 1T AND FeFET

The 1T AND FeFET [11] memory array employing the Vw/2 biasing write strategy is illustrated in Fig.2(a). Due to the shared wordline (WL) configuration within the same row in AND-type arrays and the distinct WL voltage requirements for programming different states, our tool adopts the Erase-before-Reset scheme depicted in Fig.2(c). This scheme comprises two phases:

1) Global Erase Phase: The entire row is first erased to the '0' state (referred to as the set operation).
2) Selective Reset Phase: Targeted cells are then programmed to the '1' state (defined as the reset operation).

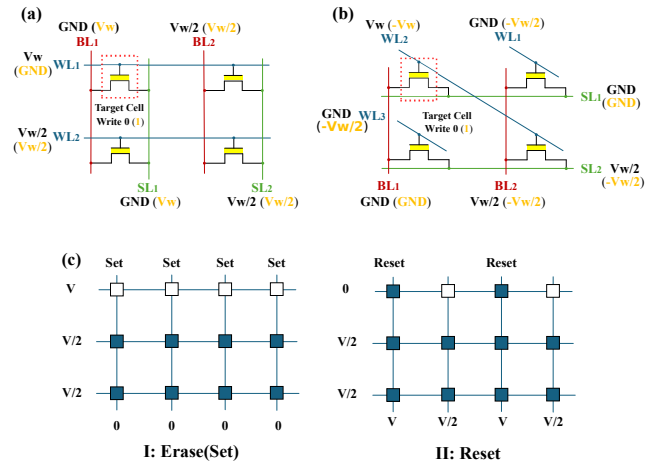

Fig. 2. (a) 1T AND FeFET (b) 1T NOR FeFET (c) Erase before Reset

B. Diagonal 1T NOR FeFET

This tool employs a diagonal 1T NOR FeFET [12] memory array, where the word lines are arranged diagonally. Compared to the traditional 1T NOR FeFET, this configuration ensures that the source and drain voltages of the selected cells remain consistent, thereby achieving higher write speeds and lower write power consumption. In this tool, writing a "1" in the diagonal 1T NOR FeFET is considered the reset process, and writing a "0" is considered the set process, as shown in Fig. 2(b). Additionally, it is assumed that the number of rows and columns in the array is the same, and the length of the diagonal and the number of cells on the diagonal are processed as follows:

$$L_{Wordline} = \frac{\sqrt{2NOR_{cellarea}}}{2} \tag{1}$$

$$Num_{dig} = \frac{numRow^2}{2numRow - 1} \tag{2}$$

Where $numRow$ refers to the number of rows in the memory array, $NOR_{cellarea}$ denotes the area of the diagonal 1T NOR FeFET, Num_{dig} is the average number of storage cells on the diagonal, and $L_{Wordline}$ indicates the average length of the diagonal.Throughout the remainder of this paper, 1T NOR FeFET will be used to represent the diagonal 1T NOR FeFET.

C. 1T AND MLC FeFET

In this tool, the multi-level cell (MLC) FeFET is designed for 2-bit storage [13]. It employs alternating positive/negative pulses for row programming, where the impact of disturbance stress is self-compensating rather than cumulative, effectively mitigating write interference, as illustrated in Fig. 3. The process is divided into three stages:

1) Intermediate State Initialization: Cells are first set to an intermediate state.
2) Alternating Polarity Programming: Sequential positive and negative pulses are applied to alternate the write operations.
3) Real-Time Verification and Correction: During programming, each write state is immediately validated.

Authorized licensed use limited to: University of Pennsylvania. Downloaded on March 22,2026 at 17:47:39 UTC from IEEE Xplore. Restrictions apply.

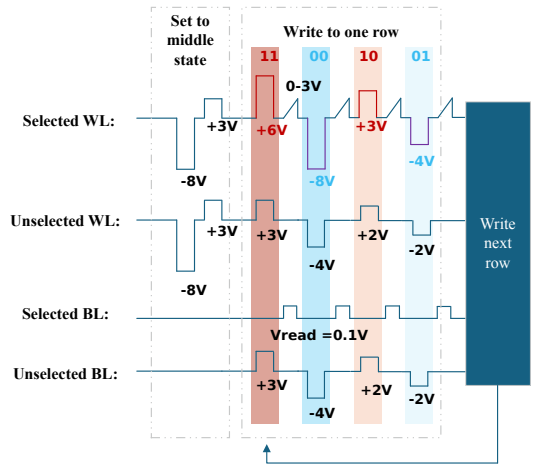

Fig. 3. 1T-AND-MLC-FeFET

As shown in Fig.4, the threshold voltage corresponding to each state is read and compared with the standard threshold voltage. If a mismatch occurs, higher or lower-amplitude pulses are applied to the gate for correction (attempts<10) until a match is achieved. Due to the immaturity of the fabrication process, this tool only evaluates the performance of the 1T AND MLC FeFET memory array.

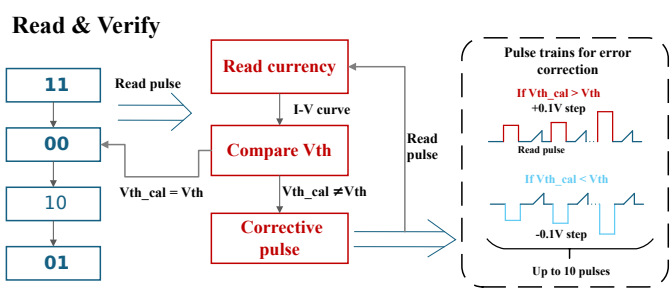

Fig. 4. Reading and Verification Process

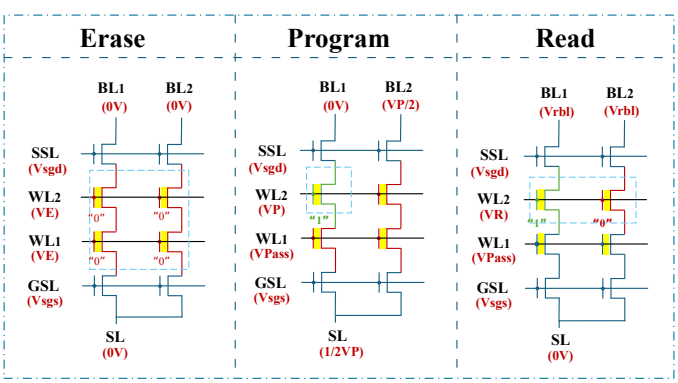

Fig. 5. NAND FeFET

D. NAND FeFET

The conventional NAND FeFET [14] is employed as the storage unit for Flash memory. Its read and write processes are illustrated in Fig.5. The SGD (Select Gate Drain) and SGS (Select Gate Source) are connected in series with the storage unit FeFET. The erase process is regarded as the reset process, which writes 0, while the program process is considered the set process, which writes 1, without requiring additional voltage conditions to write 0 .

IV. Proposed Evaluation Method for FeFET-Based Memory Performance

In this section, we present the modeling methodologies for evaluating key performance metrics of FeFET memory arrays, including area, read/write latency, read/write energy consumption, and MW estimation. These models integrate device-level ferroelectric switching dynamics with array-level architectural parameters to enable comprehensive performance analysis under varying operational conditions.

A. Area Model

In this work, the area of the sub-array is crucial for estimating the memory area. 1) The area of the memory array is estimated based on the actual length and width of the cell, while also considering the inter-cell connections. 2) The total area of the sub-array is determined by referencing the supplementary length and width relationship between the peripheral circuits and the memory array in NVSim. The area of the diagonal 1T NOR FeFET is 3.5 times that of the traditional 1T NOR FeFET [12], while the areas of the traditional 1T NOR FeFET and the 1T AND FeFET can be considered similar. Therefore, this tool simplifies their area estimation.

B. Energy Model

For the ferroelectric field-effect transistor (FeFET) memory array, the energy consumption distribution is shown in Fig. 6(a). The primary sources of energy consumption include the charging and discharging of the FeFET gate parasitic capacitance Cg, the source and drain ground capacitances (which are approximately equal in this work), and the energy consumption caused by the drain current during data read operations. Additionally, the power consumption due to gate leakage current is considered. For the 1T NOR array, the gate leakage current is the sum of the gate leakage currents of all cells along the diagonal, and it satisfies the following relationship with the number of rows in the array:

$$I_{leak} = numRow \times \left(\frac{1.6e^{-6} - 6}{2^{16}} \right) \tag{3}$$

For the energy consumption of the capacitors, the traditional formula $E = CV^2$ is used. Finally, based on the read and write processes of the memory array, the calculations are primarily divided into three parts: read, set, and reset (as shown in Fig.6(a)). For the MLC FeFET array, writing is performed row by row using alternating positive and negative pulses for the four states 11, 00, 10, and 01. Multi-level writing requires verification of the written state, and after each write, a cycle of read-verify-correct-reverify is needed. In this tool, a random

Authorized licensed use limited to: University of Pennsylvania. Downloaded on March 22,2026 at 17:47:39 UTC from IEEE Xplore. Restrictions apply.

array is used to simulate the corrected random threshold voltages. Once the random threshold voltage matches the standard threshold voltage, the verification is completed, and the writing of the next state proceeds. The energy consumption of the correction and read pulses applied during this process is calculated (as shown in Fig. 4). Therefore, the row write energy of the MLC FeFET can be simply expressed as:

$$E_{row} = E_{verify} + \frac{E_{write:11,00,10,01}}{4} \times numRow \quad (4)$$

C. Latency Model

Similarly, the delay distribution of each FeFET storage array is shown in Fig.6(b), a distributed model and lumped model of the wiring are introduced, combined with the Elmore delay to model the propagation delay of voltage and current signals. This is then compared with write or read pulses to obtain the final delay. For 1T AND FeFET and 1T NOR FeFET, a wiring RC distributed model is used, segmenting the bitline based on the value of $numRow$, with each segment's capacitance being the sum of the ferroelectric source-to-ground capacitance and the bitline's parasitic capacitance, and each segment's resistance being the parasitic resistance. Together with the conduction resistance of the target cell, the delay is calculated using the Elmore model.

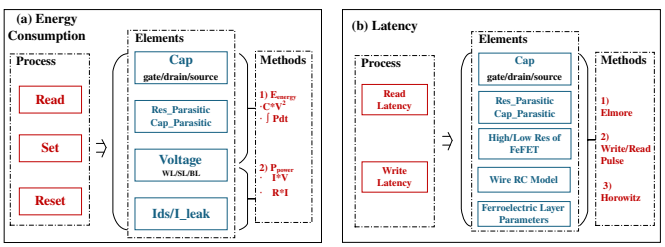

Fig. 6. (a) Energy Consumption Model and (b) Latency Model

For NAND FeFET-based flash memory arrays, as shown in Fig.7, during the read process, the conduction resistance of all storage units except the target cell is very low. At this point, the FeFET series portion can be treated as a wire and divided into two parts. These two parts are modeled using a lumped RC wire model, equivalent to R_1, R_2, and C_1, C_2,along with the parasitic capacitance and resistance of the SGD and SGS transistors, as well as the conduction resistance. The Elmore delay model is then used to calculate the delay of the current signal.The expressions for $Capbitline$ and $Resbitline$ are as follows:

$$Capbitline = C_{wire} + 2numRow \times C_{FeFET-drain} \quad (5)$$

$$Resbitline = R_{wire} + numRow \times LRS_{FeFET} \quad (6)$$

whereLRS_{FeFET} represents the low resistance when the FeFET transistor is turned on

For 1T AND MLC FeFET, the delay calculation is relatively straightforward, based on writing or reading a single state as the fundamental unit to compute the delay. During the write process, the verification time (the time to calculate the output current and determine the threshold voltage) and the number of verifications account for the majority of the write delay. The calculation method is as follows:

$$T_{write} = (i+1)(T_{readPulse} + T_{setPulse} + T_{simulation}) \quad (7)$$

where i represents the number of verifications.

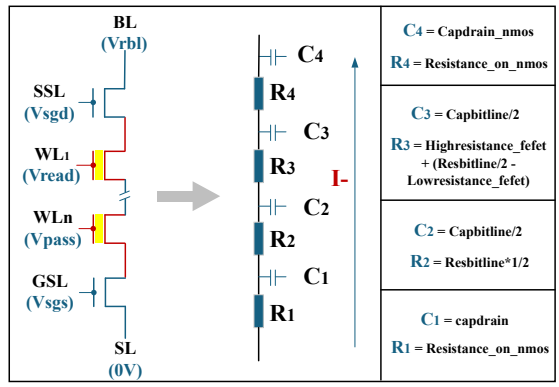

Fig. 7. Delay Calculation Model for NAND FeFET

D. Memory Window

1) Ideal: This tool can roughly estimate the MW of FeFET based on different ferroelectric(FE) materials and ferroelectric layer structures. As shown in Fig. 8,the ferroelectric layer structures are categorized into MFS, MFIS, and MFMIS. For FeFETs with the MFS structure, disregarding the effects of voltage and interface charges, it can be considered as an ideal MW. The calculation method is as follows [15]:

$$MW \approx \begin{cases} \frac{2P_{r,\mathrm{FE}}}{\varepsilon_{\mathrm{FE}}\varepsilon_0}, & P_r \ll \varepsilon_{\mathrm{FE}}\varepsilon_0 E_c \\ \frac{2E_c t_{\mathrm{FE}}}{1+\frac{\varepsilon_{\mathrm{FE}}\varepsilon_0 E_c \tanh\eta}{P_r}}, & P_r > \varepsilon_{\mathrm{FE}}\varepsilon_0 E_c \tanh(\eta)\left(2-\frac{1}{\eta}\right) \end{cases} \quad (8)$$

(Ps: spontaneous polarization; η: squareness of hysteresis loop $\eta = \frac{Pr}{Ps}$; t_{FE}: FE thickness; ε_0: vacuum permittivity; Pr:remanent polarization; E_c:coercive fields ε_{FE}:dielectric constant)

In Eq.(8), the calculation formulas for MW under different intervals of Pr are provided. When Pr falls outside the specified intervals, the calculation method applicable to larger values of Pr can still be used to estimate MW.

2) Non-ideal: When the structure is MFMIS or MFIS, the gate-source voltage difference does not entirely fall on the FE layer. In this case, the voltage division problem of the insulating layer and other components needs to be considered. we uses V_m as the voltage drop on the FE layer to calculate the MW under non-ideal conditions [15]:

$$MW_{\mathrm{minor}} \approx MW_0\left(1-\frac{\tanh(\theta_\alpha_V/P_s)}{\tanh(\theta_P_r/P_s)}\right) - \frac{2t\alpha_V}{\varepsilon_{FE}\varepsilon_0}\left(1-\frac{P_r}{\alpha_V}\frac{\tanh(\theta_\alpha_V/P_s)}{\tanh(\theta_P_r/P_s)}\right). \quad (9)$$

Authorized licensed use limited to: University of Pennsylvania. Downloaded on March 22,2026 at 17:47:39 UTC from IEEE Xplore. Restrictions apply.

$$\alpha_V = \frac{1}{2}P_s \tanh\left(\eta\left(\frac{V_m}{t_{FE}} + E_c\right)/E_c\right) - \tanh\left(\eta\left(\frac{V_m}{t_{FE}} - E_c\right)/E_c\right) \quad (10)$$

Eq. (9) calculates MW under non-ideal conditions that account solely for voltage division in the insulating layer,where $\theta_- \approx \frac{1}{2}\left(1 + \frac{3}{5}\varepsilon_{FE}\varepsilon_0\frac{E_c}{P_s}\eta\right)$ and MW_o is calculated using Eq.(8),while the strong dependence of V_m in Eq. (10) on the applied gate voltage V_g facilitates a detailed investigation of the gate voltage's influence on MW.

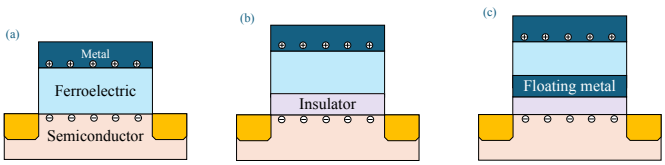

Fig. 8. Layer Structures: (a) MFS (b) MFIS (c) MFMIS

V. Experimental Results

To validate the evaluability and predictability of this tool for assessing the performance of memory devices based on different FeFET cells and related memory units, we conducted a series of performance evaluation tests.

Firstly, the variation of read and write energy consumption with respect to the read and write voltages was evaluated, as illustrated in Fig.9(a) and Fig.9(b). Both read and write energy consumption increase with the rise in read and write voltages. The gate parasitic capacitance and the complexity of the write process contribute to the relatively higher write energy consumption. Additionally, the erase process before block writing in NAND-type memory leads to even higher energy consumption.

Further, we investigated the impact of storage array size (by varying the size of sub-arrays) on read and write latency. The results, shown in Fig.10(a) and Fig.10(b), indicate that read and write latencies range between picoseconds and nanoseconds, which is within normal expectations,moreover,when the subarray size exceeds 128x128, the latency increases rapidly. It is foreseeable that array size becomes a major contributor to read and write latency in high-capacity storage scenarios.

Moreover, the influence of different ferroelectric materials on the MW was examined by varying the Pr (remanent polarization) and Ec (coercive field), as depicted in Fig.11(a). It is observed that at high Pr, Ec has a more pronounced effect on MW. Fig.11(b) evaluates the impact of voltage drop across the ferroelectric layer on MW under non-ideal conditions. Overall, MW increases with rising V_{FE} (ferroelectric voltage), and this trend is more evident at higher Ec.

Additionally, Fe-NVSim is capable of evaluating the read-/write latency, energy consumption, and area for 2-bit MLC FeFET arrays. Experimental results (Table.I) reveal a strong correlation between write energy and voltage for 1T AND MLC FeFET. And the Table.II demonstrates that Fe-NVSim is currently one of the few tools capable of evaluating FeFET-based memory architectures, particularly excelling in analyzing ferroelectric-specific metrics such as polarization dynamics and MW characteristics.

Finally, Table.III briefly demonstrates the impact of different FeFET feature sizes on the estimation results, especially in energy and power,while the influence of their characteristic dimensions on device parameters still requires further refinement and modeling.

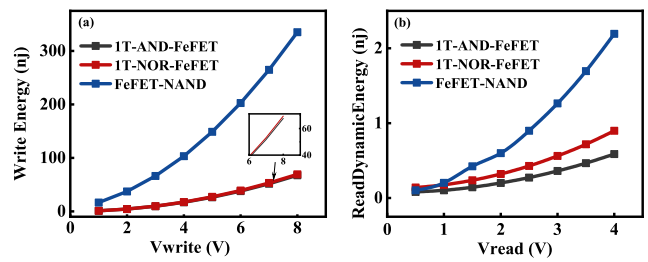

Fig. 9. (a) V_{write}-Write Energy (b) V_{read}-Read Energy

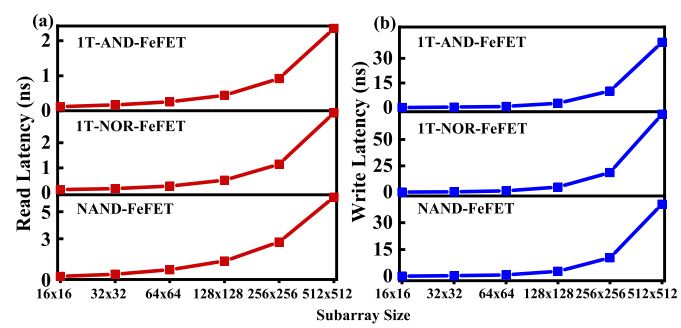

Fig. 10. (a) $Size_{subarray}$-Read Latency (b) $Size_{subarray}$-Write Latency

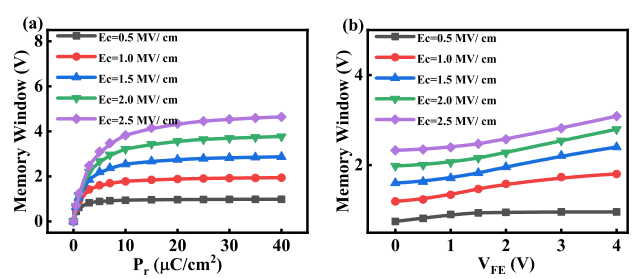

Fig. 11. (a) P_r-MW (b) V_{FE}-MW

TABLE I
WRITE STATE(V_{State})-WRITE ENERGY(E_{Row})

$V_{(11,00,10,01)}(V)$	(2,-3, 1.5,-1.5)	(4,-6, 3,-3)	(6,-8, 4,-4)	(8,-10, 6,-6)
E_{row}**(nj)**	50.28	178.099	318.398	401.644

Authorized licensed use limited to: University of Pennsylvania. Downloaded on March 22,2026 at 17:47:39 UTC from IEEE Xplore. Restrictions apply.

TABLE II
COMPARISON OF DIFFERENT TOOLS

Tools	Performance Evaluation	Memory	Memory Technology
NVSim [8]	Area, Power, Latency	Cache, RAM	STT-RAM, PCRAM, ReRAM, Legacy NAND Flash
NVmain [16]	Timing, Power, Endurance	Cache, RAM	DRAM, STT-RAM, PCRAM
DRAMsim3 [9]	Thermal, Timing	RAM	DRAM
VAET-STT [17]	Power, Latency, Reliability	RAM	STT-MRAM
NVSim-VX^s [10]	Write error rate, Switching current distribution, Switching time distribution, NVSim outputs	RAM	STT-RAM
CACTI 6.0 [18]	Area, Power, Latency, Access Time, API	Cache, RAM	SRAM
NVSim-CAM [19]	Area, Timing, Power	CAM	—
Fe-NVSim [this work]	**Area, Latency, Power, Memory Window**	**RAM**	**FeFET, FeFET NAND Flash**

TABLE III
IMPACT OF FEFET FEATURE SIZE ON 1T-AND-FEFET PERFORMANCE

Feature size(nm)	7	10	14	28
$Area(mm^2)$	0.0527	0.0619	0.0816	0.217
$T_{Read}(ns)$	0.194	0.218	0.257	0.443
$T_{Write(ns)}$	0.165	0.248	0.459	2.681
$E_{Read}(nj)$	0.0466	0.0485	0.0549	0.104
$E_{Write}(nj)$	0.32	0.596	1.112	4.285
$P_{cells}(nW)$	103.219	147.456	206.438	412.877

VI. CONCLUSION

In this study, we propose a novel circuit-aware simulator for FeFET-based embedded memory by extending NVSim functionality. A variety of evaluation methods and models are developed and implemented in this tool to assess the performance of multiple FeFET cells. Particularlythe unique feature memory window for FeFET-based memory can be evaluated by this tool. We hope our work could contribute to the development of FeFET memory evaluation tools and advance related EDA research for FeFET memory.

REFERENCES

[1] A. Reuther, P. Michaleas, M. Jones, V. Gadepally, S. Samsi, and J. Kepner, "AI Accelerator Survey and Trends," in *2021 IEEE High Performance Extreme Computing Conference (HPEC)*, 2021, pp. 1–9.

[2] S. Ikegawa, K. Nagel, F. B. Mancoff, S. M. Alam, M. Arora, M. De-Herrera, H. K. Lee, S. Mukherjee, G. Shimon, J. J. Sun, I. Rahman, F. Neumeyer, H. Y. Chou, C. Tan, A. Shah, and S. Aggarwal, "High-Speed (400MB/s) and Low-BER STT-MRAM Technology for Industrial Applications," in *2022 International Electron Devices Meeting (IEDM)*, 2022, pp. 10.4.1–10.4.4.

[3] Z. Chen, H. Wu, B. Gao, D. Wu, N. Deng, H. Qian, Z. Lu, B. Haukness, M. Kellam, and G. Bronner, "Performance Improvements by SL-Current Limiter and Novel Programming Methods on 16MB RRAM Chip," in *2017 IEEE International Memory Workshop (IMW)*, 2017, pp. 1–4.

[4] D. Min, J. Park, O. Weber, F. Wacquant, A. Villaret, E. Vandenbossche, F. Arnaud, E. Bernard, S. Elghouli, C. Boccaccio, L. Favennec, R. Gonella, J. Galvier, J. Yun, J. Park, M. Lee, P. Yoon, I. Lee, H. Seo, H. Choi, C. Oh, J. Kang, S. Park, H. Lee, Y. Choi, I. Kim, J. Jo, Y. Park, J. Park, Y. Lee, J. Jung, J. Lee, H. Jang, J. Kang, J. Kwon, J. Kim, S. Maeda, and Y. Hong, "18nm FDSOI Technology Platform embedding PCM Innovative Continuous-Active Construct Enhancing Performance for Leading-Edge MCU Applications," in *2021 IEEE International Electron Devices Meeting (IEDM)*, 2021, pp. 13.1.1–13.1.4.

[5] H. Mulaosmanovic, E. T. Breyer, S. Dünkel, S. Beyer, T. Mikolajick, and S. Slesazeck, "Ferroelectric field-effect transistors based on HfO2: a review," *Nanotechnology*, vol. 32, no. 50, p. 502002, 2021.

[6] S. Salahuddin, K. Ni, and S. Datta, "The era of hyper-scaling in electronics," *Nature Electronics*, vol. 1, no. 8, pp. 442–450, 2018.

[7] T. Fu, M. Zeng, S. Liu, H. Liu, R. Huang, and Y. Wu, "Record-high 2Pr=60 C/cm2 by Sub-5ns Switching Pulse in Ferroelectric Lanthanum-doped HfO2 with Large Single Grain of Orthorhombic Phase>38 nm," in *2022 International Electron Devices Meeting (IEDM)*, 2022, pp. 6.5.1–6.5.4.

[8] X. Dong, C. Xu, N. P. Jouppi, and Y. Xie, "NVSim: A Circuit-Level Performance, Energy, and Area Model for Emerging Nonvolatile Memory," *IEEE Transactions on Computer-Aided Design of Integrated Circuits and Systems*, vol. 31, no. 7, pp. 994–1007, 2012.

[9] S. Li, Z. Yang, D. Reddy, A. Srivastava, and B. Jacob, "DRAMsim3: A Cycle-Accurate, Thermal-Capable DRAM Simulator," *IEEE Computer Architecture Letters*, vol. 19, no. 2, pp. 110–113, 2020.

[10] E. Eken, L. Song, I. Bayram, C. Xu, W. Wen, Y. Xie, and Y. Chen, "NVSim-VXs: An Improved NVSim for Variation Aware STT-RAM Simulation," in *2016 ACM/IEEE 43rd Annual International Symposium on Computer Architecture (ISCA)*. ACM, 2016, pp. 1–12.

[11] M. Ullmann, H. Goebel, H. Hoenigschmid, and T. Haneder, "Disturb free programming scheme for single transistor ferroelectric memory arrays," *Integrated Ferroelectrics*, vol. 34, no. 1-4, pp. 155–164, 2001.

[12] Y. Xiao, Z. Zhao, S. Deng, Z. Jiang, Y. Xu, H. Mulaosmanovic, S. Duenkel, S. Beyer, S. Meninger, M. Mohamed, R. Joshi, X. Gong, S. Kurinec, V. Narayanan, and K. Ni, "On the Write Schemes and Efficiency of FeFET 1T NOR Array for Embedded Nonvolatile Memory and Beyond," *IEEE Transactions on Electron Devices*, vol. 69, no. 11, pp. 6722–6730, 2022.

[13] Y. Zhou, H. Shao, W. Huang, R. Zhu, Y. Zhang, R. Huang, and K. Tang, "A Compact Writing Scheme for the Reliability Challenges in 1T Multi-Level FeFET Array: Variation, Endurance, and Write Disturb," *IEEE Electron Device Letters*, vol. 45, no. 12, pp. 2387–2390, 2024.

[14] Y. Wang, Y. Yang, P. Jiang, S. Lv, B. Wang, Y. Chen, Y. Ding, T. Gong, B. Chen, R. Cheng, X. Yu, and Q. Luo, "HfO2-Based Junctionless FeFET Array on FDSOI Platform for NAND Memory Applications," *IEEE Electron Device Letters*, vol. 44, no. 6, pp. 943–946, 2023.

[15] K. Toprasertpong, M. Takenaka, and S. Takagi, "Memory Window in Ferroelectric Field-Effect Transistors: Analytical Approach," *IEEE Transactions on Electron Devices*, vol. 69, no. 12, pp. 7113–7119, 2022.

[16] M. Poremba and Y. Xie, "NVMain: An Architectural-Level Main Memory Simulator for Emerging Non-volatile Memories," in *2012 IEEE Computer Society Annual Symposium on VLSI*. IEEE, 2012, pp. 209–214.

[17] S. M. Nair, R. Bishnoi, M. S. Golanbari, F. Oboril, and M. B. Tahoori, "VAET-STT: A variation aware estimator tool for STT-MRAM based memories," in *Design, Automation Test in Europe Conference Exhibition (DATE), 2017*, 2017, pp. 1456–1461.

[18] N. Muralimanohar, R. Balasubramonian, and N. Jouppi, "Optimizing NUCA Organizations and Wiring Alternatives for Large Caches with CACTI 6.0," in *40th Annual IEEE/ACM International Symposium on Microarchitecture (MICRO 2007)*, 2007, pp. 3–14.

[19] S. Li, L. Liu, P. Gu, C. Xu, and Y. Xie, "NVSim-CAM: A Circuit-Level Simulator for Emerging Nonvolatile Memory based Content-Addressable Memory," in *2016 IEEE/ACM International Conference on Computer-Aided Design (ICCAD)*. IEEE, 2016, pp. 1–8.

Authorized licensed use limited to: University of Pennsylvania. Downloaded on March 22,2026 at 17:47:39 UTC from IEEE Xplore. Restrictions apply.