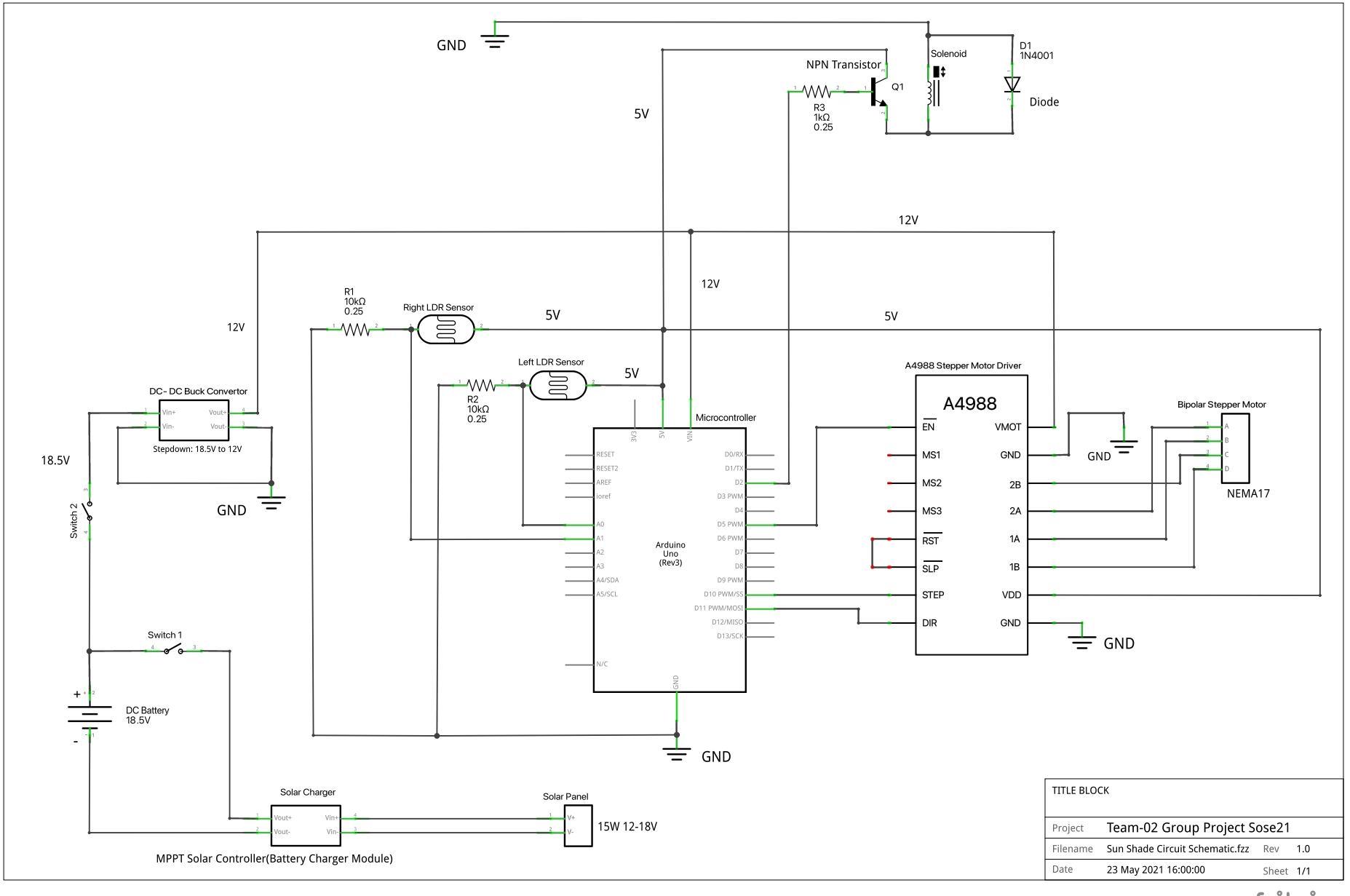

TITLE BLOCK			
Project	Team-02 Group Project Sose21		
Filename	Sun Shade Circuit Schematic.fzz	Rev	1.0
Date	23 May 2021 16:00:00	Sheet	1/1

fritzing